LOS OSOS WASTEWATER PROJECT
COLLECTION SYSTEM AREAS B & C
LOS OSOS, CA
CONTRACT NO. 300448.08.01.BC

VOLUME 2

RECOMMENDED FOR APPROVAL:

John Waddell 4/6/12

LOS OSOS WASTEWATER PROJECT MANAGER DATE

APPROVED:

Dave Flynn 4/6/12

DEPUTY DIRECTOR OF PUBLIC WORKS DATE

County of San Luis Obispo
Los Osos, California

Drawings for the Construction of

Los Osos Wastewater Collection System Project
Areas B & C

VOLUME II - AREA B

APRIL 2012

REGISTERED PROFESSIONAL ENGINEER BRUCE JAMES OSBORN C 051414 Exp. 06/30/12 STATE OF CALIFORNIA

CDM Smith
2295 Gateway Oaks Drive, Suite 240
Sacramento, CA 95833
Tel: (916) 567-9600

©2012 CDM SMITH ALL RIGHTS RESERVED.
REUSE OF DOCUMENTS: THESE DOCUMENTS AND DESIGNS PROVIDED BY PROFESSIONAL SERVICE, INCORPORATED HEREIN, ARE THE PROPERTY OF CDM SMITH AND ARE NOT TO BE USED, IN WHOLE OR PART, FOR ANY OTHER PROJECT WITHOUT THE WRITTEN AUTHORIZATION OF CDM SMITH.
S:\Los Osos\Walnut Creek\G\Area B & C\ B-G-001 04/02/12 08:44 bullockll

LOCATION MAP

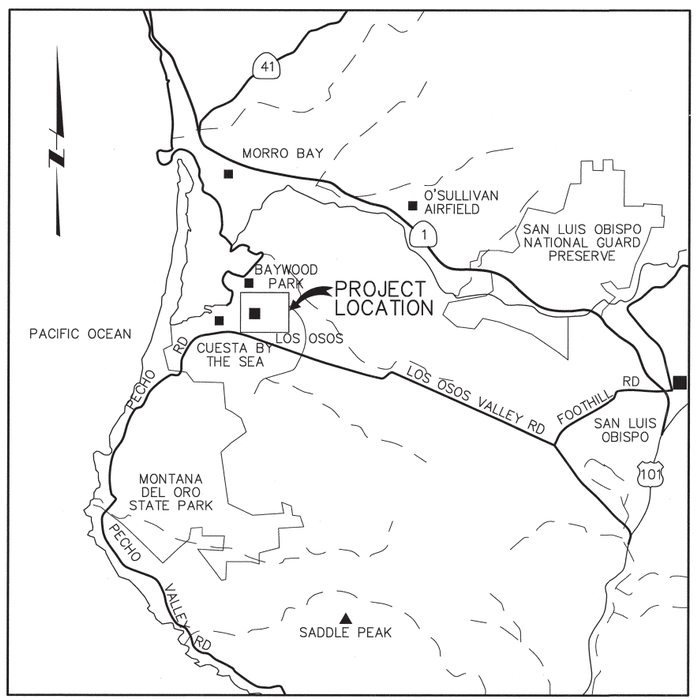

VICINITY MAP

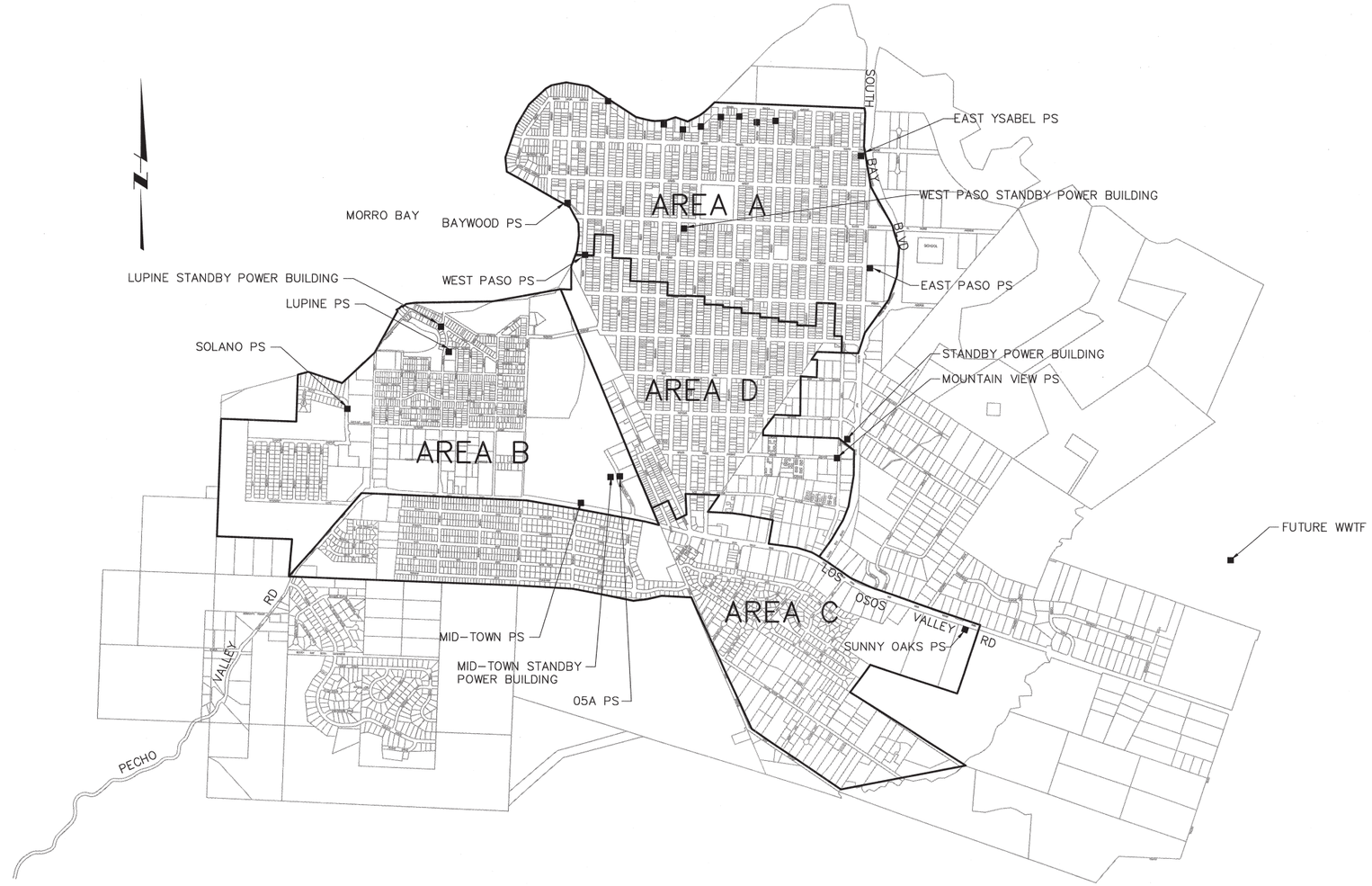

SITE PLAN

REV. NO.	DATE	DRWN	CHKD	REMARKS

DESIGNED BY: BJC
DRAWN BY: WKT
CHECKED BY: MDM
DATE: APRIL, 2012

CDM Smith
2295 Gateway Oaks Drive, Suite 240
Sacramento, CA 95833
Tel: (916) 567-9900

0 1/2 1
IF THIS BAR DOES NOT MEASURE 1" THEN ADJUST SCALE ACCORDINGLY

REGISTERED PROFESSIONAL ENGINEER BRUCE JAMES CORRIN C 061414 Exp. 06/30/12 CIVIL STATE OF CALIFORNIA

DIGALERT
DIAL TOLL FREE 1-800-642-2444 AT LEAST TWO DAYS BEFORE YOU DIG
UNDERGROUND SERVICE ALERT OF NORTHERN CALIFORNIA

LOS OSOS WASTEWATER COLLECTION SYSTEM

LOCATION MAP, VICINITY MAP, AND SITE PLAN

PROJECT NO.42502-83120
FILE NAME: B-G-002
SHEET NO.
B-G-002

©2012 CDM SMITH ALL RIGHTS RESERVED.
REUSE OF DOCUMENTS: THESE DOCUMENTS AND DESIGNS PROVIDED BY PROFESSIONAL SERVICE, INCORPORATED HEREIN, ARE THE PROPERTY OF CDM SMITH AND ARE NOT TO BE USED, IN WHOLE OR PART, FOR ANY OTHER PROJECT WITHOUT THE WRITTEN AUTHORIZATION OF CDM SMITH.
S:\Los Osos\Walnut Creek\G\Area B & C\ B-G-002 04/02/12 08:44 bullockl XREFS: LosOsos-bdr, CA-BJC, LOC_MDL_KEYPLAN, vicinity, boundry

LIST OF DRAWINGS

GENERAL

B-G-001	COVER SHEET
B-G-002	LOCATION MAP, VICINITY MAP, AND SITE PLAN
B-G-003	AREA B LIST OF DRAWINGS
B-G-004	GENERAL SURVEY DATA, POTHOLE DATA, AGENCY CONTACT INFORMATION
B-G-005	(NOT USED)
B-G-006	GENERAL AREA B KEY PLAN
B-G-007	AREA B FUTURE STORM DRAIN KEY PLAN
B-G-008	(NOT USED)
B-G-009	(NOT USED)
B-G-010	GENERAL NOTES
B-G-011	GENERAL SYMBOLS
B-G-012	GENERAL ABBREVIATIONS

TRAFFIC CONTROL

B-TC-001	AREA B TRAFFIC CONTROL PLAN – GENERAL NOTES, LEGEND AND ABBREVIATIONS
B-TC-002	AREA B TRAFFIC CONTROL PLAN – DETAIL SHEETS: PAVEMENT MARKERS AND TRAFFIC LINES
B-TC-003	AREA B TRAFFIC CONTROL PLAN – DETAIL SHEETS: PAVEMENT MARKINGS, ARROWS AND WORDS
B-TC-004	AREA B TRAFFIC CONTROL PLAN – DETAIL SHEETS: DELINEATORS, CHANNELIZERS AND BARRICADES
B-TC-005	AREA B TRAFFIC CONTROL PLAN – DETAIL SHEETS: CRASH CUSHIONS
B-TC-006	AREA B TRAFFIC CONTROL PLAN – DETAIL SHEETS: TEMPORARY RAILING (TYPE K)
B-TC-007	AREA B TRAFFIC CONTROL PLAN – DETAIL SHEETS: CALTRANS TRAFFIC CONTROL PLANS
B-TC-008	AREA B TRAFFIC CONTROL PLAN – TYPICAL MINOR STREET MID-BLOCK CONSTRUCTION
B-TC-009	AREA B TRAFFIC CONTROL PLAN – TYPICAL MINOR STREET MID-BLOCK ROADWAY CENTER CLOSURE
B-TC-010	AREA B TRAFFIC CONTROL PLAN – TYPICAL PUMP STATION SHOULDER AND ROADWAY EDGE WORK

CIVIL

GENERAL CIVIL

B-GC-060	GENERAL CIVIL STANDARD CIVIL DETAILS – 1
B-GC-061	GENERAL CIVIL STANDARD CIVIL DETAILS – 2
B-GC-062	GENERAL CIVIL STANDARD CIVIL DETAILS – 3
B-GC-063	GENERAL CIVIL STANDARD CIVIL DETAILS – 4
B-GC-064	GENERAL CIVIL STANDARD CIVIL DETAILS – 5
B-GC-065	GENERAL CIVIL STANDARD CIVIL DETAILS – 6
B-C-201	CIVIL AREA B KEY PLAN
B-C-202	CIVIL LUPINE PUMP STATION SITE PLAN
B-C-203	CIVIL SOLANO PS & STANDBY POWER SITE PLAN
B-C-204	MID-TOWN PS AND PPS 5A SITE PLAN

MECHANICAL

B-M-001	MECHANICAL STANDARD DETAILS – 1
B-M-002	MECHANICAL STANDARD DETAILS – 2
B-M-003	MECHANICAL POCKET PUMP STATIONS PLAN & SECTIONS
B-M-004	MECHANICAL SUBMERSIBLE PUMP STATIONS DUPLEX LAYOUT – PLAN & SECTION
B-M-005	MECHANICAL SUBMERSIBLE PUMP STATIONS TRIPLEX LAYOUT – PLAN & SECTION
B-M-006	ODOR CONTROL VAULT MID – TOWN PUMP STATION

COLLECTION SYSTEM – SANITARY SEWER

B-PP-100	PLAN AND PROFILE PALISADES AVENUE STA: 12+90 TO STA 20+75
B-PP-101	PLAN AND PROFILE LUPINE STREET STA 1+05 TO STA 2+60
B-PP-102	PLAN AND PROFILE DORIS AVENUE STA 22+00 TO STA 26+75
B-PP-103	PLAN AND PROFILE BINSCARTH ROAD STA 10+25 TO STA 13+10
B-PP-104	PLAN AND PROFILE BINSCARTH ROAD STA 1+00 TO STA 10+25
B-PP-105	PLAN AND PROFILE PECHO ROAD STA 15+25 TO STA 22+15
B-PP-106	PLAN AND PROFILE PECHO ROAD STA 6+70 TO STA 15+25
B-PP-107	PLAN AND PROFILE LUPINE STREET STA 2+60 TO STA 5+45
B-PP-108	PLAN AND PROFILE BAY STREET STA 1+00 TO STA 6+00
B-PP-109	PLAN AND PROFILE RAMONA AVENUE STA 0+90 TO STA 7+50
B-PP-110	PLAN AND PROFILE DONNA AVENUE STA 12+00 TO STA 15+15
B-PP-111	PLAN AND PROFILE FEARN AVENUE STA 11+20 TO STA 15+70
B-PP-112	PLAN AND PROFILE MITCHELL DRIVE STA 8+60 TO 17+60
B-PP-113	PLAN AND PROFILE DON AVENUE STA 6+65 TO STA 9+45
B-PP-114	PLAN AND PROFILE MITCHELL DRIVE STA 0+90 TO STA 5+60
B-PP-115	PLAN AND PROFILE PINE AVENUE STA 28+45 TO STA 33+10
B-PP-116	PLAN AND PROFILE VINE STREET STA 0+90 TO STA 5+80
B-PP-117	PLAN AND PROFILE BRODERSON AVENUE STA 23+05 TO STA 25+35
B-PP-118	PLAN AND PROFILE DORIS AVENUE STA 26+75 TO STA 30+40
B-PP-119	PLAN AND PROFILE MITCHELL DRIVE STA 0+90 TO STA 7+55 WEST MITCHELL STA 1+25 TO STA 3+05
B-PP-120	PLAN AND PROFILE BINSCARTH ROAD STA 13+10 TO STA 23+00
B-PP-121	PLAN AND PROFILE PINE AVENUE STA 19+50 TO STA 26+35
B-PP-122	PLAN AND PROFILE ASH STREET STA 6+25 TO STA 10+80
B-PP-123	PLAN AND PROFILE BRODERSON AVENUE STA 6+55 TO STA 9+05
B-PP-124	PLAN AND PROFILE SKYLINE DRIVE STA 30+10 TO STA 32+25
B-PP-125	PLAN AND PROFILE DONNA ROAD STA 1+40 TO STA 10+75
B-PP-126	PLAN AND PROFILE HENRIETTA AVENUE STA 14+45 TO STA 15+50
B-PP-127	PLAN AND PROFILE HENRIETTA AVENUE STA 15+50 TO STA 17+45
B-PP-128	PLAN AND PROFILE FEARN AVENUE STA 1+05 TO STA 10+75
B-PP-129	PLAN AND PROFILE HENRIETTA AVENUE STA 18+20 TO STA 22+30
B-PP-130	PLAN AND PROFILE ASH STREET STA 0+90 TO STA 3+10
B-PP-131	PLAN AND PROFILE SKYLINE DRIVE STA 22+40 TO 24+65
B-PP-132	PLAN AND PROFILE DON AVENUE STA 1+35 TO STA 5+90
B-PP-133	PLAN AND PROFILE BINSCARTH ROAD STA 23+00 TO STA 27+25
B-PP-134	PLAN AND PROFILE LOMA STREET STA 0+90 TO STA 5+65
B-PP-135	PLAN AND PROFILE HENRIETTA AVENUE STA 23+00 TO STA 27+75
B-PP-136	PLAN AND PROFILE PINE AVENUE STA 16+00 TO STA 19+50
B-PP-137	PLAN AND PROFILE ASH STREET STA 3+55 TO STA 6+25
B-PP-138	PLAN AND PROFILE SKYLINE DRIVE STA 25+55 TO STA 27+50
B-PP-139	PLAN AND PROFILE SKYLINE DRIVE STA 27+50 TO STA 29+25
B-PP-140	PLAN AND PROFILE DORIS AVENUE STA 12+95 TO STA 22+00
B-PP-141	PLAN AND PROFILE GARDEN STREET STA 0+70 TO STA 5+10
B-PP-142	PLAN AND PROFILE NANCY AVENUE STA 10+00 TO STA 13+10
B-PP-143	PLAN AND PROFILE HENRIETTA AVENUE STA 10+95 TO STA 12+75
B-PP-144	PLAN AND PROFILE SUNNY HILL ROAD STA 0+90 TO STA 5+05
B-PP-145	PLAN AND PROFILE HENRIETTA AVENUE STA 6+65 TO STA 9+00
B-PP-146	PLAN AND PROFILE MAPLE AVENUE STA 1+00 TO STA 4+95
B-PP-147	PLAN AND PROFILE HENRIETTA AVENUE STA 9+00 TO STA 9+65
B-PP-148	PLAN AND PROFILE NANCY AVENUE STA 1+30 TO STA 10+00
B-PP-149	PLAN AND PROFILE NORTH COURT STREET STA 1+00 TO STA 7+35
B-PP-150	PLAN AND PROFILE SOUTH COURT STREET STA 0+95 TO STA 7+65
B-PP-151	PLAN AND PROFILE GROVE STREET STA 1+05 TO STA 5+30
B-PP-152	PLAN AND PROFILE HENRIETTA AVENUE STA 1+05 TO STA 5+10
B-PP-153	PLAN AND PROFILE ASPEN STREET STA 1+60 TO STA 5+80
B-PP-154	PLAN AND PROFILE SOLANO STREET STA 1+10 TO STA 7+35
B-PP-155	PLAN AND PROFILE HOWARD AVENUE STA 8+00 TO STA 18+83
B-PP-156	PLAN AND PROFILE HOWARD AVENUE STA 2+15 TO STA 8+00
B-PP-157	PLAN AND PROFILE NEVADA COURT STA 0+90 TO STA 3+60
B-PP-158	PLAN AND PROFILE BUTTE DRIVE STA 1+00 TO STA 10+70
B-PP-159	PLAN AND PROFILE INYO STREET STA 0+85 TO STA 11+50
B-PP-160	PLAN AND PROFILE HUMBOLDT STREET STA 1+60 TO STA 11+50
B-PP-161	PLAN AND PROFILE GLENN STREET STA 1+60 TO STA 11+50
B-PP-162	PLAN AND PROFILE FRESNO STREET STA 1+60 TO STA 11+50
B-PP-163	PLAN AND PROFILE EL DORADO STREET STA 1+60 TO STA 11+50
B-PP-164	PLAN AND PROFILE DEL NORTE STREET STA 1+60 TO STA 11+45
B-PP-165	PLAN AND PROFILE ROSINA DRIVE STA 1+15 TO STA 8+00

COLLECTION SYSTEM – RECYCLED WATER

B-PP-336	PLAN AND PROFILE: REW HOWARD AVENUE STA 7+00 TO STA 12+00
B-PP-337	PLAN AND PROFILE: REW EL DORADO STREET STA 1+00 TO STA 11+50
B-PP-338	PLAN AND PROFILE: REW MONARCH LANE STA 11+60 TO STA 20+00
B-PP-339	PLAN AND PROFILE: REW PALISADES AVENUE STA 9+50 TO STA 16+00

COLLECTION SYSTEM – FORCE MAIN

B-PP-460	PLAN AND PROFILE: FM DORIS AVENUE, STA 26+35 TO STA 27+70 LUPINE STREET, STA 1+00 TO STA 5+45
B-PP-461	PLAN AND PROFILE: FM FEARN AVENUE STA 10+60 TO STA 15+00
B-PP-462	PLAN AND PROFILE: FM BINSCARTH ROAD STA 17+75 TO STA 22+60
B-PP-463	PLAN AND PROFILE: FM PINE AVENUE STA 15+00 TO STA 26+30
B-PP-464	PLAN AND PROFILE: FM PINE AVENUE STA 15+00 TO STA 4+90
B-PP-465	PLAN AND PROFILE: FM PALISADES AVENUE STA 10+00 TO STA 20+75
B-PP-466	PLAN AND PROFILE: FM SOLANO STREET, STA 4+15 TO STA 7+05 SKYLINE DRIVE, STA 0+90 TO STA 5+70

STRUCTURAL

B-S-001	STRUCTURAL NOTES 1
B-S-002	STRUCTURAL NOTES 2
B-S-003	STANDARD STRUCTURAL DETAILS 1
B-S-004	STANDARD STRUCTURAL DETAILS 2
B-S-011	STRUCTURAL SUBMERSIBLE PUMP STATIONS & VALVE VAULTS – FOUNDATION AND TOP PLANS
B-S-012	STRUCTURAL SUBMERSIBLE PUMP STATIONS & VALVE VAULTS – SECTIONS AND DETAILS
B-S-013	STRUCTURAL POCKET PUMP STATION PLANS AND SECTION
B-S-014	STRUCTURAL ODOR CONTROL VAULT PLANS AND SECTIONS

ELECTRICAL

B-E-001	ELECTRICAL FIBER OPTIC & POWER CONDUIT PLAN AREA B
B-E-002	ELECTRICAL DETAILS

©2012 CDM SMITH ALL RIGHTS RESERVED.
REUSE OF DOCUMENTS: THESE DOCUMENTS AND DESIGNS PROVIDED BY PROFESSIONAL SERVICE, INCORPORATED HEREIN, ARE THE PROPERTY OF CDM SMITH AND ARE NOT TO BE USED, IN WHOLE OR PART, FOR ANY OTHER PROJECT WITHOUT THE WRITTEN AUTHORIZATION OF CDM SMITH.
S:\Los Osos\Walnut Creek\G\Area B & C\ B-G-003 04/02/12 14:07 bullockll XREFS: LosOsos-bdr

REV. NO.	DATE	DRWN	CHKD	REMARKS

DESIGNED BY: BJC
DRAWN BY: WKT
CHECKED BY: MDM
DATE: APRIL, 2012

CDM Smith
2295 Gateway Oaks Drive, Suite 240
Sacramento, CA 95833
Tel: (916) 567-9900

0 1/2 1
IF THIS BAR DOES NOT MEASURE 1" THEN ADJUST SCALE ACCORDINGLY

REGISTERED PROFESSIONAL ENGINEER BRUCE JAMES COOPER C 061414 Exp. 06/30/12 CIVIL STATE OF CALIFORNIA

DIGALERT DIAL TOLL FREE 1-800-642-2444 AT LEAST TWO DAYS BEFORE YOU DIG
UNDERGROUND SERVICE ALERT OF NORTHERN CALIFORNIA

LOS OSOS WASTEWATER COLLECTION SYSTEM

AREA B
LIST OF DRAWINGS

PROJECT NO.42502-83120
FILE NAME: B-G-003
SHEET NO.
B-G-003

SURVEY DATA

HORIZONTAL POSITIONS AND ELLIPSOID HEIGHTS ARE BASED ON NORTH AMERICAN DATUM OF 1983, 1991.35 EPOCH ADJUSTMENT OF THE HIGH PRECISION GEODETIC NETWORK AS REFERENCED BY #1315 IN THIS SURVEY, NGS DESIGNATION "A 1315" AND #14, NGS DESIGNATION "942110 TIDAL 14 RESET." THE NAD83 DATUM SUPERSEDED THE NAD27 DATUM

ORTHOMETRIC HEIGHTS (ELEVATIONS) ARE BASED ON THE NORTH AMERICAN VERTICAL DATUM OF 1988 (NAND88) PER #1315 AND #14 AS REFERENCED ABOVE. IN ADDITION AS FIRST ORDER CLASS 1 BENCHMARK NGS DESIGNATION "B 1314" (PT #1314) WAS USED FOR QUALITY CONTROL. THE ORTHOMETRIC HEIGHTS WITHIN THE PROJECT SITE WAS USED FOR QUALITY CONTROL. THE OROTHOMETRIC HEIGHTS WITHIN THE PROJECT SITE ARE APPROXIMATELY ONLY, DUE TO THE DISTANCE BETWEEN THE SITE AND THE BENCHMARKS. THE PURPOSE OF THE MODELING WITHIN THE SITE WAS TO DETERMINE A GOOD ORTHOMETRIC MODEL WITHIN THE SITE AREA ITSELF. NO ATTEMPT WAS MADE TO MAKE THIS MODEL TO EXACTLY MATCH NAVD88.

THE SURVEY DATA PROVIDED HEREIN WAS SUPPLIED BY THE COUNTY FOR USE DURING DESIGN AND CONSTRUCTION.

POTHOLE DATA

AREA	POTHOLE DRAWING ID	EXISITING GRADE (FEET)	DEPTH TO TOP	EXISTING AC THICKNESS	LOCATION	DESCRIPTION	NORTHING	EASTING
B	7 B-PP-106	37.1 +/-	42"	4"	PECHO/SKYLINE	2" G	2,313,451.16	5,710,919.67
B	8 B-PP-106	37.5 +/-	47"	7"	PECHO/SKYLINE	6" W	2,313,444.29	5,710,902.23
B	9 B-PP-112	13.8 +/-	–	4"	DON/MITCHELL	SD – NOT FOUND		
B	24 B-PP-158	13.3 +/-	–	7"	SOLANO	30" SD	2,313,787.72	5,710,375.68

AGENCY CONTACT INFORMATION

WATER

LOCSD
MARGARET FALKNER
2122 9TH ST. P.O. BOX 6064
LOS OSOS, CA 93412
(805) 528-9370

GOLDEN STATE WATER CO.
MARK ZIMMER
1140 LOS OLIVOS AVE.
LOS OSOS, CA 93402
(805) 528-2287

S&T MUTUAL WATER CO.
DAVE TOLLEY
P.O. BOX 6391
LOS OSOS, CA 93412
(805) 534-1139

STORM DRAINS

COUNTY OF SAN LUIS OBISPO
DEPARTMENT OF PUBLIC WORKS
COUNTY GOVERNMENT CENTER
ROOM 207
SAN LUIS OBISPO, CA 93408

GAS

SOUTHERN CALIFORNIA GAS CO.
BRUCE SPENCER
P.O. BOX 818
GOLETA, CA 93116
(805) 681-8083

ELECTRIC

PG&E
TOM WAHWEOTTIN
4325 S. HIGUERA
SAN LUIS OBISPO, CA 93401
(805) 546-5227

FIRE DEPARTMENT

CAL FIRE/SAN LUIS OBISPO COUNTY
FIRE DEPARTMENT
SOUTH BAY STATION #15
CHIEF ROBERT LEWIN
2315 BAYVIEW HEIGHTS DR.
LOS OSOS, CA 93402
(805) 528-1053

PHONES/FIBER OPTIC

TERRADEX
PETER BIFFAR
855 EL CAMINO REAL,
SUITE 311
PALO ALTO, CA 94301
(877) 577-4111 (EXT 100)

LEVEL 3 COMMUNICATIONS
MICHAEL SEILER
775 CAPITOLIO WAY
SAN LUIS OBISPO, CA 93401
(805) 593-1816

AT&T LEGACY
ROSEMARY HAMILL
2741 N. MAIN STREET
WALNUT CREEK, CA 94597
(916) 799-4642

AT&T TRUNK & TOLL
AMY PIGNATARO
1860 WARDROBE AVENUE
MERCED, CA 95341
(209) 726-6920

AT&T LOCAL EXCHANGE
RALPH SOARES
196 SUBURBAN ROAD
SAN LUIS OBISPO, CA 93401
(805) 237-8131

QWEST/CENTURYLINK
GEORGE MCELVAIN
700 MINERAL AVENUE
UTD 2734
LITTLETON, CO 80120
(720) 260-2514

SPRINT-NEXTEL
TIBOR LAKY
2592 DUPONT DRIVE
IRVINE, CA 92612
(800) 659-9698

VERIZON
DEAN BOYERS
2400 N. GLENVILLE DRIVE
RICHARDSON, TX 75082
(972) 729-6322

CHARTER COMMUNICATIONS
270 BRIDGE STREET
SAN LUIS OBISPO, CA 93401
(805) 466-3040

UMAN / FIBER OPTIC

SAN LUIS COASTAL UNIFIED
SCHOOL DISTRICT

©2012 CDM SMITH ALL RIGHTS RESERVED.
REUSE OF DOCUMENTS: THESE DOCUMENTS AND DESIGNS PROVIDED BY PROFESSIONAL SERVICE, INCORPORATED HEREIN, ARE THE PROPERTY OF CDM SMITH AND ARE NOT TO BE USED, IN WHOLE OR PART, FOR ANY OTHER PROJECT WITHOUT THE WRITTEN AUTHORIZATION OF CDM SMITH.
S:\Los Osos\Walnut Creek\G\Area B & C\ B-G-004 04/02/12 15:50 bullockll XREFS: bdr, x-contact_info

REV. NO.	DATE	DRWN	CHKD	REMARKS

DESIGNED BY: BJC
DRAWN BY: LLB
CHECKED BY: MDM
DATE: APRIL, 2012

CDM Smith
2295 Gateway Oaks Drive, Suite 240
Sacramento, CA 95833
Tel: (916) 567-9900

0 1/2 1
IF THIS BAR DOES NOT MEASURE 1" THEN ADJUST SCALE ACCORDINGLY

REGISTERED PROFESSIONAL ENGINEER BRUCE JAMES COMPTON C 061414 Exp. 06/30/12 CIVIL STATE OF CALIFORNIA

DIGALERT DIAL TOLL FREE 1-800-642-2444 AT LEAST TWO DAYS BEFORE YOU DIG
UNDERGROUND SERVICE ALERT OF NORTHERN CALIFORNIA

LOS OSOS WASTEWATER COLLECTION SYSTEM
GENERAL
SURVEY DATA, POTHOLE DATA, AGENCY CONTACT INFORMATION

PROJECT NO.42502-83120
FILE NAME: B-G-004
SHEET NO.
B-G-004

NOTES

1. FOR SS ALIGNMENT SEE SHEETS B-PP-100 THROUGH B-PP-164
2. FOR REW ALIGNMENT SEE SHEETS B-PP-336 THROUGH B-PP-338
3. FOR FM ALIGNMENT SEE SHEETS B-PP-460 THROUGH B-PP-464

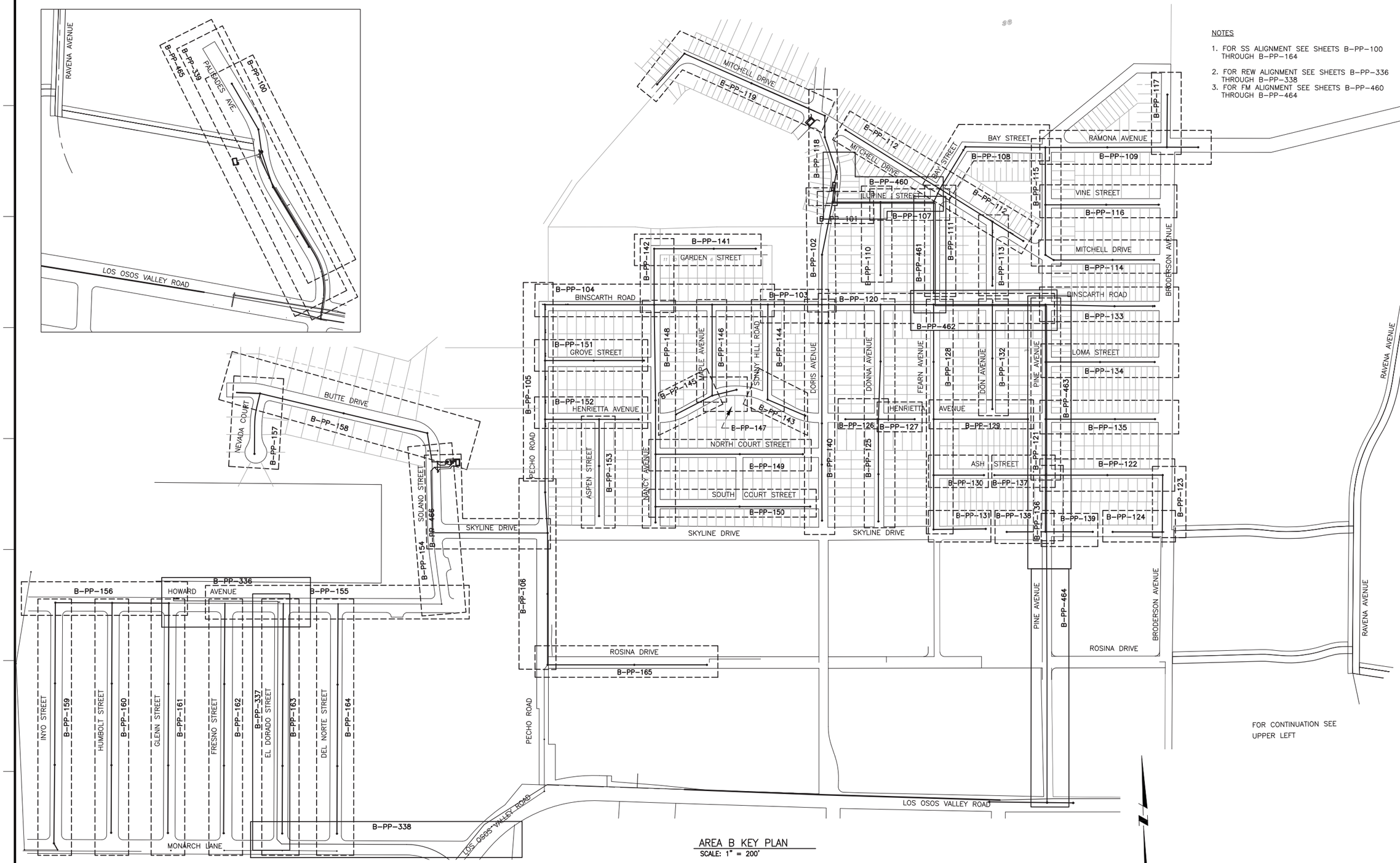

AREA B KEY PLAN
SCALE: 1" = 200'

SCALE:
HORZ: 1"=200'
VERT: N/A

REV. NO.	DATE	DRWN	CHKD	REMARKS

DESIGNED BY: DCS/DJN
DRAWN BY: DCS
CHECKED BY: JPW
DATE: APRIL 2012

CDM Smith
2295 Gateway Oaks Drive, Suite 240
Sacramento, CA 95833
Tel: (916) 567-9900

0 1/2 1
IF THIS BAR DOES NOT MEASURE 1" THEN ADJUST SCALE ACCORDINGLY

REGISTERED PROFESSIONAL ENGINEER JEFFREY P. WAGNER Lic. No. 26,431 Expires 3/31/12 STATE OF CALIFORNIA

eda design professionals
civil engineers • land surveyors • land planners
1998 santa barbara st • san luis obispo, ca 93401
ph: 805/549-8658 • email: eda@edainc.com

DIGALERT
DIAL TOLL FREE
1-800-642-2444
AT LEAST TWO DAYS BEFORE YOU DIG
UNDERGROUND SERVICE ALERT OF NORTHERN CALIFORNIA

LOS OSOS WASTEWATER COLLECTION SYSTEM

KEY PLAN

PROJECT NO.42502-83120
FILE NAME: B-G-006
SHEET NO.
B-G-006

INDICATES GENERAL AREA OF PLANNED DRAINAGE INFILTRATOR OR STORM DRAIN

INDICATES ROADWAY SURFACE TO BE RESHAPED TO CREATE CROWN SECTION

NOTES TO CONTRACTOR:
THE DRAINAGE IMPROVEMENTS DENOTED ON THIS SHEET WILL BE CONSTRUCTED BY OTHERS AND ARE NOT IN THIS CONTRACT. THE OWNER WILL COORDINATE WITH THE CONTRACTOR TO INSURE THAT CONSTRUCTION OF THE DRAINAGE IMPROVEMENTS DO NOT INTERFERE WITH THE CONTRACTOR'S WORK.

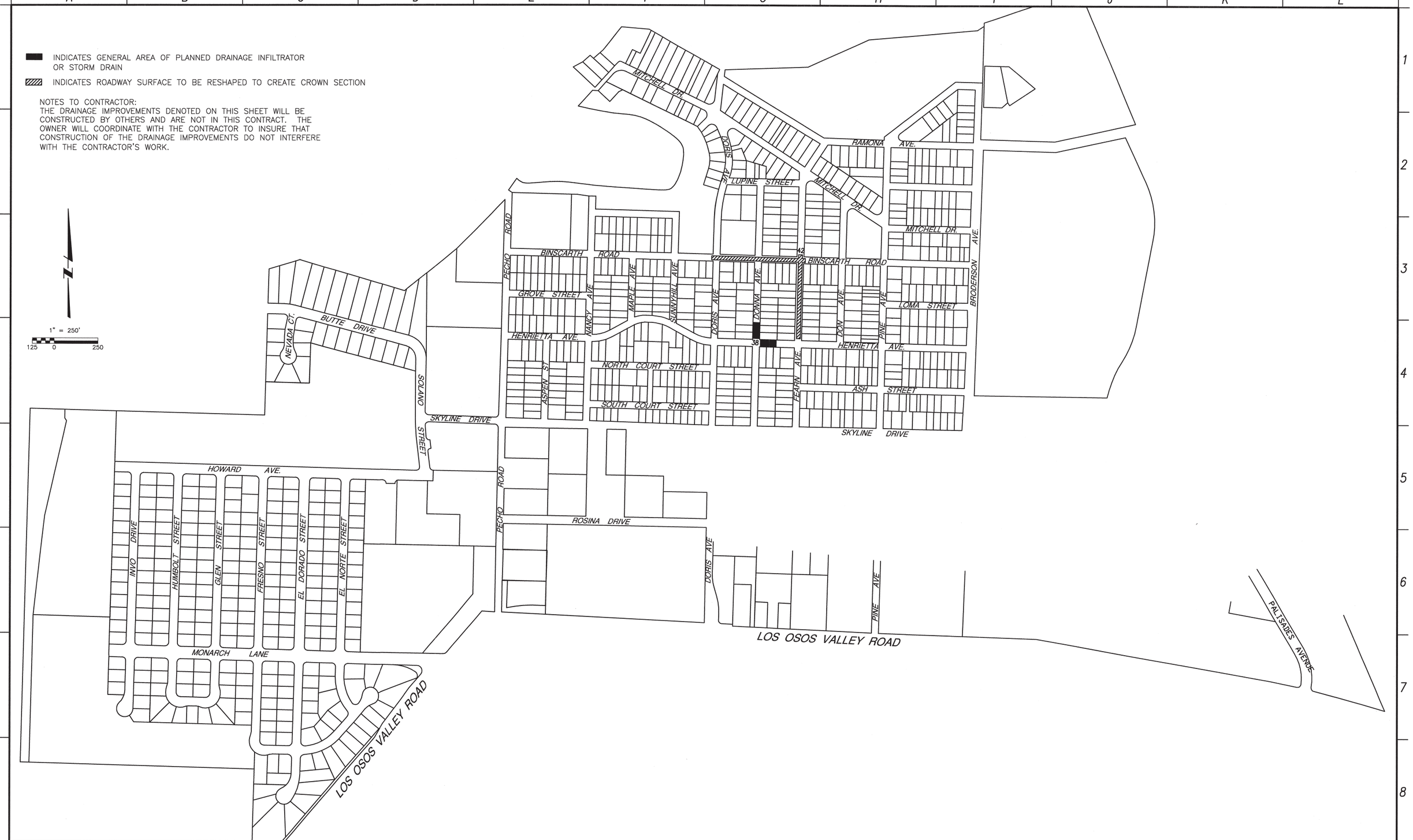

REV. NO.	DATE	DRWN	CHKD	REMARKS

DESIGNED BY: BJC
DRAWN BY: LLB
CHECKED BY: MDM
DATE: APRIL, 2012

CDM Smith
2295 Gateway Oaks Drive, Suite 240
Sacramento, CA 95833
Tel: (916) 567-9900

0 1/2 1
IF THIS BAR DOES NOT MEASURE 1" THEN ADJUST SCALE ACCORDINGLY

REGISTERED PROFESSIONAL ENGINEER BRUCE JAMES CORWIN C 051414 Exp. 06/30/12 CIVIL STATE OF CALIFORNIA

DIGALERT
DIAL TOLL FREE 1-800-642-2444
AT LEAST TWO DAYS BEFORE YOU DIG
UNDERGROUND SERVICE ALERT OF NORTHERN CALIFORNIA

LOS OSOS WASTEWATER COLLECTION SYSTEM
AREA B
FUTURE STORM DRAIN
KEY PLAN

PROJECT NO. 42502-83120
FILE NAME: B-G-007
SHEET NO.
B-G-007

©2012 CDM SMITH ALL RIGHTS RESERVED.
REUSE OF DOCUMENTS: THESE DOCUMENTS AND DESIGNS PROVIDED BY PROFESSIONAL SERVICE, INCORPORATED HEREIN, ARE THE PROPERTY OF CDM SMITH AND ARE NOT TO BE USED, IN WHOLE OR PART, FOR ANY OTHER PROJECT WITHOUT THE WRITTEN AUTHORIZATION OF CDM SMITH.
S:\Los Osos\Walnut Creek\G\Area B & C\ B-G-007 04/02/12 08:43 bullockll XREFS: bdr

GENERAL NOTES

1. THE CONTRACTOR SHALL HAVE COPIES OF THE APPROVED PLANS FOR THIS PROJECT ON THE SITE AT ALL TIMES AND SHALL BE FAMILIAR WITH ALL APPLICABLE STANDARDS AND SPECIFICATIONS.

2. STANDARD SPECIFICATIONS – ALL CONSTRUCTION WORK AND INSTALLATIONS SHALL CONFORM TO THESE CONSTRUCTION DOCUMENTS AND THE COUNTY OF SAN LUIS OBISPO STANDARD PLANS AND SPECIFICATIONS, CURRENT EDITION, AND ALL WORK SHALL BE SUBJECT TO THE APPROVAL OF THE COUNTY.

3. UTILITY NOTIFICATION – PRIOR TO BEGINNING ANY EARTHWORK, THE CONTRACTOR SHALL BE RESPONSIBLE FOR CONTACTING ALL AGENCIES INVOLVED AND SHALL LOCATE ALL FACILITIES PRIOR TO EXCAVATION IN ANY AREA. THE CONTRACTOR SHALL CALL DIG ALERT (USA), TOLL FREE AT 1–800–642–2444 AT LEAST 48 HOURS PRIOR TO THE START OF CONSTRUCTION.

4. EXISTING UTILITIES – THE LOCATIONS AND ELEVATIONS OF EXISTING UTILITIES WHERE SHOWN ON THE PLANS ARE BASED ON AVAILABLE RECORDS, AND ARE APPROXIMATE ONLY. THE CONTRACTOR AGREES THAT HE SHALL ASSUME SOLE AND COMPLETE RESPONSIBILITY FOR LOCATING OR HAVING LOCATED ALL UNDERGROUND UTILITIES AND OTHER FACILITIES AND FOR PROTECTING THE SAME DURING THE COURSE OF CONSTRUCTING THE PROJECT. ANY DEVIATIONS FROM THE PLAN LOCATION OF ANY EXISTING FACILITIES SHALL BE IMMEDIATELY BROUGHT TO THE ATTENTION OF THE COUNTY INSPECTOR.

5. SITE CONDITIONS – THE CONTRACTOR SHALL CONTINUALLY REVIEW JOB SITE CONDITIONS. CONDITIONS REQUIRING CONSTRUCTION DIFFERENT FROM THAT SHOWN ON THE PLANS SHALL BE REPORTED TO THE COUNTY INSPECTOR PRIOR TO PROCEEDING WITH THE AFFECTED CONSTRUCTION.

6. CONTRACTORS RECORD OF CHANGES – THE CONTRACTOR SHALL MAINTAIN A CURRENT, COMPLETE, AND ACCURATE RECORD OF ALL CHANGES WHICH DEVIATE FROM THE CONSTRUCTION AS SHOWN ON THESE PLANS AND SPECIFICATIONS FOR THE PURPOSE OF PROVIDING THE ENGINEER OF RECORD WITH A BASIS FOR THE PREPARATION OF RECORD DRAWINGS.

7. RECORD DRAWINGS – THE CONTRACTOR SHALL MAINTAIN A SET OF MARKED UP AS–BID DRAWINGS SHOWING ACTUAL INSTALLED AND FIELD CONDITIONS.

8. MANHOLE ENTRY SHALL BE IN COMPLIANCE WITH THE CONFINED SPACE ENTRY REQUIREMENTS OF CAL–OSHA, AND THE COUNTY OF SAN LUIS OBISPO.

9. EXISTING UTILITIES IN THE PROJECT AREA INCLUDING ACP WATER MAINS MAY BE IN A FRAGILE CONDITION. THE CONTRACTOR SHALL EXERCISE CAUTION WHEN WORKING NEAR EXISTING UTILITIES.

10. PRIOR TO CONSTRUCTION, THE CONTRACTOR SHALL LOCATE ALL TRAFFIC SIGNAL LOOPS, CABLES, AND CONDUITS IN THE VICINITY OF THE WORK. TRAFFIC SIGNALS SHALL BE MAINTAINED IN OPERATION DURING CONSTRUCTION AT ALL TIMES. CONTRACTOR SHALL PROTECT EXISTING TRAFFIC SIGNAL LOOPS AND FACILITIES. DAMAGED FACILITIES SHALL BE RESTORED IN ACCORDANCE WITH THE SPECIFICATIONS.

11. PLAN ELEVATIONS OR DEPTHS FOR EXISTING UNDERGROUND UTILITIES ARE BASED ON RECORD DRAWINGS AND SURVEY INFORMATION AND ARE APPROXIMATE ONLY. WHERE NO ELEVATIONS ARE SHOWN, NO SUCH INFORMATION WAS AVAILABLE DURING DESIGN AND CONTRACTOR SHALL EXPOSE THESE UTILITIES FOR FIELD VERIFICATION PRIOR TO CONSTRUCTION.

12. UTILITY SERVICES AND THEIR LOCATION ARE NOT SHOWN ON THESE DRAWINGS. THE CONTRACTOR SHALL TAKE NECESSARY MEASURES TO LOCATE AND PROTECT SERVICES DURING CONSTRUCTION. NO INTERRUPTION OF UTILITY SERVICES SHALL BE ALLOWED.

13. DIMENSIONS FOR ALL OTHER EXISTING STRUCTURES, REFERENCING PIPING, PAVING, AND OTHER NON–STRUCTURAL ITEMS ARE APPROXIMATE. THE CONTRACTOR SHALL FIELD VERIFY ALL DIMENSIONS AND CONDITIONS.

14. FOR ALL STANDARD MANHOLES THE COORDINATE LOCATIONS REPRESENT THE CENTERLINE OF THE MANHOLE BASE UNLESS INDICATED OTHERWISE ON THESE DRAWINGS. MANHOLES LOCATED AT THE INTERSECTIONS MAY BE ADJUSTED SUBJECT TO FIELD VERIFICATION BY THE CONTRACTOR. LOCATIONS OF MANHOLES THAT ARE NOT AT PIPELINE INTERSECTIONS MAY BE ADJUSTED SUBJECT TO APPROVAL BY THE ENGINEER.

15. CONTRACTOR SHALL OBTAIN A PERMIT FROM THE COUNTY OR APPROPRIATE WATER COMPANY FOR THE USE OF CONSTRUCTION WATER. THE PERMIT SHALL BE APPROVED BY THE CALFIRE/COUNTY'S FIRE DEPARTMENT.

16. DISCREPANCIES BETWEEN COORDINATES, BEARINGS AND LENGTHS, AND STATIONING SHALL BE RESOLVED IN THE FOLLOWING ORDER OF PRECEDENCE:
    1. COORDINATES
    2. BEARINGS AND LENGTHS
    3. STATIONING – STATIONING IS BASED ON CONSTRUCTION BASELINE.

17. IN ALL LOCATIONS WHERE TRENCH PLATE IS USED ON THIS PROJECT THE CONTRACTOR SHALL SUPPLY SKID RESISTANT COATING ON THE TRENCH PLATE AND COLD MIX A.C. AT THE EDGES. TRENCH PLATES SHALL BE NOTCHED INTO AC PAVING, WEDGED, AND SHIMMED TO PREVENT SLIPPAGE AND ROCKING UNDER TRAFFIC.

18. MECHANICAL CONSTRUCTION EQUIPMENT USED ON THIS PROJECT SHALL BE SELECTED TO MINIMIZE DAMAGE TO THE EXISTING PAVEMENT ALONG THE PROJECT SITE. THE CONTRACTOR SHALL REPLACE DAMAGED AC PAVEMENT IN ACCORDANCE WITH THE CONTRACT DOCUMENTS AT NO ADDITIONAL COST TO THE COUNTY.

19. SANITARY SEWER INSTALLATION MAY REQUIRE CURB, GUTTER AND SIDEWALK, AND CONCRETE V–DITCH/VALLEY GUTTER REMOVAL AND REPLACEMENT. THE CONTRACTOR SHALL INCLUDE ALL COSTS IN THE APPROPRIATE BID ITEM(S).

20. THE CONTRACTOR SHALL REMOVE AND PROPERLY DISPOSE OF ALL SURPLUS EXCAVATION MATERIAL AND DEBRIS PROMPTLY FROM THE SITE AND SHALL MAINTAIN THE SITE IN A NEAT AND ORDERLY CONDITION. CONTRACTOR SHALL OBTAIN ALL NECESSARY FILL AND GRADING PERMITS.

21. THE CONTRACTOR SHALL COMPLY WITH ALL FEDERAL, STATE, COUNTY, AND DISTRICT LAWS AND ORDINANCES RELATING TO THE SAFETY AND CHARACTER OF WORK, EQUIPMENT AND LABOR PERSONNEL. THIS SHALL INCLUDE, BUT IS NOT LIMITED TO, THE SHORING OF TRENCHES, VENTILATORS OF CONFINED SPACES, CONFORMANCE TO TRAFFIC CONTROL REQUIREMENTS INCLUDING THE PROVISION AND MAINTENANCE OF BARRICADES AND THE PREPARATION AND IMPLEMENTATION OF TRAFFIC CONTROL PLANS AS REQUIRED.

22. PIPE LENGTHS ARE THROUGH MANHOLE AS INDICATED. STATIONING IS ALONG THE CONSTRUCTION BASELINE.

23. THE CONTRACTOR SHALL ABIDE BY ALL PROJECT PERMITS OBTAINED BY THE COUNTY. SEE SPECIFICATIONS SECTION 01060.

24. THE CONTRACTOR SHALL OBTAIN CONSTRUCTION PERMITS FROM REGULATORY, UTILITY, AND ANY OTHER AGENCIES REQUIRING PERMITTING FOR THIS CONSTRUCTION WORK. THE CONTRACTOR SHALL PROVIDE A WRITTEN SIGNED RELEASE FROM EACH AGENCY UPON COMPLETION OF CONSTRUCTION.

25. ALL DEWATERING WATER SHALL BE DISCHARGED IN ACCORDANCE WITH RWQCB, AND COUNTY OF SAN LUIS OBISPO PERMIT REQUIREMENTS INCLUDING DESILTING, AND ONLY TO APPROVED DISCHARGE LOCATIONS. DEWATERING WELLS SHALL BE ABANDONED ACCORDING TO RWQCB, AND COUNTY OF SAN LUIS OBISPO REQUIREMENTS.

26. CONTRACTOR SHALL PROTECT AND MAINTAIN EXISTING STORM DRAIN FACILITIES AT ALL TIMES.

27. CONTRACTOR SHALL PROVIDE AND MAINTAIN TEMPORARY PAVEMENT AT ALL TIMES.

28. CONTRACTOR SHALL BACKFILL TRENCH TO GRADE AND/OR TRAFFIC PLATE AT THE END OF EACH DAY.

29. CONTRACTOR SHALL MAINTAIN EXISTING SANITARY SEWER SERVICE AT ALL TIMES. PROVIDE BYPASS PUMPING FACILITIES INCLUDING STANDBY PUMPS AND GENERATORS. EXISTING SEPTIC TANK SYSTEMS SHALL BE MAINTAINED UNTIL THE NEW SANITARY SEWER SYSTEM IS READY FOR LATERAL CONNECTIONS TO BE MADE.

30. PROVIDE K–RAIL AND CHAINLINK FENCING AROUND ALL TUNNEL ACCESS PITS. K–RAIL AND FENCE SHALL CONFORM TO THE STANDARD PLANS AND SPECIFICATIONS. PROVIDE BARRICADES WITH FLASHING LIGHTS AT EACH PIT LOCATION.

31. CONTRACTOR SHALL IDENTIFY EXISTING SURVEY MONUMENTS THAT WILL BE IMPACTED BY CONSTRUCTION. CONTRACTOR SHALL REESTABLISH MONUMENTS WITH RECORD OF SURVEY.

32. AERIAL PHOTOS USED TO PREPARE SURFACE FEATURES SHOWN ON PLANS WERE TAKEN IN 1995 AND MAY NOT ACCURATELY DEPICT EXISTING CONDITIONS. CONTRACTOR SHALL FIELD VERIFY CONDITIONS PRIOR TO CONSTRUCTION AND INCLUDE COSTS IN HIS BID THEREFOR.

33. ALL SEWERS SHALL STRICTLY CONFORM TO THE LINES AND GRADES SHOWN ON THE DRAWINGS.

34. CONTRACTOR SHALL EXERCISE EXTREME CAUTION WHILE WORKING AROUND GAS, FIBER OPTIC AND ELECTRIC UTILITIES.

35. CONTRACTOR SHALL MONITOR GROUND SURFACE AND UNDERGROUND UTILITIES FOR THE PRESENCE OF TUNNEL SLURRY OR EVIDENCE OF HYDROFRACTURE AT ALL TIMES DURING TUNNEL ACTIVITIES ALONG ENTIRE TUNNELED ALIGNMENT.

36. LOW OVERHEAD ELECTRICAL AND TELEPHONE LINES ARE PRESENT IN THE PROJECT AREA. MAJORITY OF LINES ONLY PROVIDE 8 TO 10 FEET OF CLEARANCE FROM GROUND SURFACE. CONTRACTOR SHALL EXERCISE EXTREME CAUTION WHILE WORKING AROUND OVERHEAD UTILITIES.

37. BORE AND RECEIVING PITS SIZING SHALL BE DETERMINED BY CONTRACTOR AND SHALL BE SOLID SHEETED WITH CONTINUOUSLY INTERLOCKED SHEET PILES.

38. CONTRACTOR SHALL MAINTAIN TRAFFIC AND ACCESS PER THE TRAFFIC CONTROL REQUIREMENTS OF THE CONTRACT DOCUMENTS AND THE COUNTY OF SAN LUIS OBISPO.

39. PROPERTY LINES SHOWN ARE APPROXIMATE.

40. STREET RESTORATION SHALL INCLUDE REPLACEMENT OF CONCRETE VEE–DITCH/VALLEY GUTTER WHEN REMOVED FOR OR DAMAGED BY CONSTRUCTION.

41. THESE DESIGN DRAWINGS AND RESPECTIVE SPECIFICATIONS HAVE BEEN DEVELOPED BASED ON THE BASIS OF DESIGN REPORT DATED OCTOBER 24, 2011, AND ACCEPTED/APPROVED BY THE SAN LUIS OBISPO COUNTY DEPARTMENT OF PUBLIC WORKS ON NOVEMBER 15, 2011.

42. REFERENCE MADE TO SHEETS THAT BEGIN WITH PREFIXES PS,–, B–, OR C– ARE NIC. REFERENCES ARE MADE FOR INFORMATION ONLY.

43. ELECTRICAL CONDUIT AND MANHOLES ALONG PIPE LINE GENERAL NOTES:
    1. REFER TO SPECIFICATION 16800 – FIBER OPTIC AND POWER CONDUITS ALONG PIPELINES.
    2. REFER TO ELECTRICAL DRAWINGS FOR CONDUIT QUANTITY AND SIZES.
    3. REFER TO ELECTRICAL DRAWINGS FOR MANHOLE SIZES.
    4. REFER TO ELECTRICAL DRAWINGS FOR CONDUIT TERMINATION LOCATION AT POCKET PUMP STATIONS, SUBMERSIBLE PUMPS STATIONS, STANDBY POWER BUILDINGS, ELECTRICAL EQUIPMENT AREAS, AND OTHER PANELS.

REV. NO.	DATE	DRWN	CHKD	REMARKS

DESIGNED BY: BJC
DRAWN BY: JAW
CHECKED BY: MDM
DATE: APRIL, 2012

CDM Smith
2295 Gateway Oaks Drive, Suite 240
Sacramento, CA 95833
Tel: (916) 567-9900

0 1/2 1
IF THIS BAR DOES NOT MEASURE 1" THEN ADJUST SCALE ACCORDINGLY

REGISTERED PROFESSIONAL ENGINEER BRUCE JAMES COGHILL C 061414 Exp. 09/30/12 CIVIL STATE OF CALIFORNIA

DIGALERT DIAL TOLL FREE 1–800–642–2444 AT LEAST TWO DAYS BEFORE YOU DIG
UNDERGROUND SERVICE ALERT OF NORTHERN CALIFORNIA

LOS OSOS WASTEWATER COLLECTION SYSTEM

GENERAL NOTES

PROJECT NO.42502–83120
FILE NAME: B–G–010
SHEET NO.
B–G–010

©2012 CDM SMITH ALL RIGHTS RESERVED.
REUSE OF DOCUMENTS: THESE DOCUMENTS AND DESIGNS PROVIDED BY PROFESSIONAL SERVICE, INCORPORATED HEREIN, ARE THE PROPERTY OF CDM SMITH AND ARE NOT TO BE USED, IN WHOLE OR PART, FOR ANY OTHER PROJECT WITHOUT THE WRITTEN AUTHORIZATION OF CDM SMITH.
S:\Los Osos\Walnut Creek\G\Area B & C\ B-G-010 04/02/12 08:42 bullockll XREFS: LosOsos-bdr, GENERAL NOTES

©2012 CDM SMITH ALL RIGHTS RESERVED.
REUSE OF DOCUMENTS: THESE DOCUMENTS AND DESIGNS PROVIDED BY PROFESSIONAL SERVICE, INCORPORATED HEREIN, ARE THE PROPERTY OF CDM SMITH AND ARE NOT TO BE USED, IN WHOLE OR PART, FOR ANY OTHER PROJECT WITHOUT THE WRITTEN AUTHORIZATION OF CDM SMITH.
S:\Los Osos\Walnut Creek\G\Area B & C\ B-G-011 04/02/12 08:42 bullockl XREFS: LosOsos-bdr, CA-BJC, GENERALSYMBOLS

- STRUCTURE OR FACILITY
- EXISTING STRUCTURE OR FACILITY
- FUTURE STRUCTURE OR FACILITY
- EARTH
- GRAVEL/DRAINROCK/AGGREGATE BASE (IN SECTION)
- ASPHALT CEMENT PAVING
- CONCRETE PAVING
- GRAVEL PAVING
- EARTH (IN SECTION)
- COMPACTED EARTH (IN SECTION)
- CONCRETE CURB
- CONCRETE CURB AND GUTTER
- DROP INLET CATCH BASIN
- CURBSIDE DROP INLET CATCH BASIN WITH LOCAL DEPRESSION
- SIDE INLET CATCH BASIN WITH LOCAL DEPRESSION
- CONCRETE WALK
- DRIVEWAY / ACCESS RAMP

- PIPE IN SECTION
- CL OR ℄ — CENTERLINE
- PL OR ℙ — PROPERTY LINE
- R/W — RIGHT-OF-WAY LINE
- ESMT — EASEMENT LINE
- TEMP ESMT — TEMPORARY EASEMENT LINE

FOR GRAVITY PLAN AND PROFILE ONLY

- NEW SANITARY SEWER
- NEW SANITARY SEWER MANHOLE
- E — NEW FIBER OPTIC/ELECTRICAL CONDUIT
- EXISTING SANITARY SEWER MANHOLE
- SD — EXISTING STORM DRAIN AND MH
- TEL — EXISTING BURIED TELEPHONE
- G — EXISTING GAS LINE W/VALVE
- W — EXISTING WATER LINE W/VALVE AND FIRE-HYDRANT
- SS — PLUG & ABANDON EXIST SANITARY SEWER, SEWER AND MANHOLE SHALL BE FILLED WITH GROUT
- STATE OF CALIFORNIA RIGHT OF WAY ACCESS CONTROLLED AREA
- FO — EXIST FIBER OPTIC
- SD — EXIST STORM DRAIN
- SS — EXIST SANITARY SEWER
- E — EXIST BURIED ELECTRICAL
- TEL — EXIST TELEPHONE
- ℄ — CENTER LINE
- G — EXIST GAS
- TS — EXIST TRAFFIC SIGNAL
- FENCE (NEW)
- FENCE (EXISTING)
- WATER COURSE
- TRAIL OF DIRT ROAD
- 125 — MAJOR CONTOUR LINE (NEW)
- 125 — MAJOR CONTOUR LINE (EXISTING)
- VEGETATION
- PP — POWER POLE
- GP — GRINDER PUMP

- HORIZONTAL/VERTICAL CONTROL
- BENCH MARK
- COORDINATE TICK MARK
- STREET LIGHT W/POLE
- TRAFFIC SIGNAL W/POLE
- B-8 — SOIL BORING
- POTHOLE LOCATION

FOR FORCE MAIN/RECYCLE WATER MAIN PLAN AND PROFILE ONLY

- CAV OR PRESSURIZED CO IN PLAN
- CAV IN PROFILE
- BOV IN PLAN
- BOV OR PRESSURIZED CO IN PROFILE
- GATE VALVE
- PLUG VALVE
- CAPPED END OR PLUGGED END

FOR PUMP STATION ONLY

- GATE VALVE
- BUTTERFLY VALVE
- CAPPED END OR PLUGGED END
- BLIND FLANGE
- REDUCER OR INCREASER
- PIPE CALLOUT
- EQUIPMENT NUMBER

SECTION AND DETAIL IDENTIFICATION

SECTION IDENTIFICATION

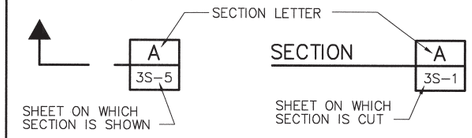

DETAIL IDENTIFICATION

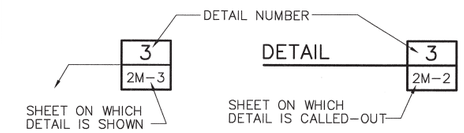

STANDARD DETAIL IDENTIFICATION

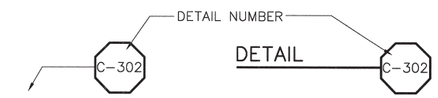

STANDARD DETAILS ARE LOCATED ON DISCIPLINE GENERAL SHEETS, IN NUMERICAL ORDER

ELEVATION IDENTIFICATION

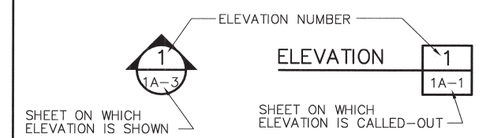

PIPING IDENTIFICATION

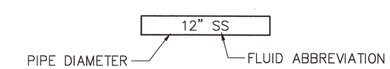

DISCIPLINE SPECIFIC SYMBOLS ARE SHOWN ON THE DISCIPLINE GENERAL DRAWINGS.

FOR WELDING SYMBOLS USE AMERICAN WELDING SOCIETY STANDARD SYMBOLS.

REV. NO.	DATE	DRWN	CHKD	REMARKS

DESIGNED BY: BJC
DRAWN BY: JAW
CHECKED BY: MDM
DATE: APRIL, 2012

CDM Smith
2295 Gateway Oaks Drive, Suite 240
Sacramento, CA 95833
Tel: (916) 567-9900

0 1/2 1
IF THIS BAR DOES NOT MEASURE 1" THEN ADJUST SCALE ACCORDINGLY

REGISTERED PROFESSIONAL ENGINEER BRUCE JAMES COOMBS C 051414 Exp. 09/30/12 CIVIL STATE OF CALIFORNIA

DIGALERT
DIAL TOLL FREE 1-800-642-2444
AT LEAST TWO DAYS BEFORE YOU DIG
UNDERGROUND SERVICE ALERT OF NORTHERN CALIFORNIA

LOS OSOS WASTEWATER COLLECTION SYSTEM

GENERAL SYMBOLS

PROJECT NO.42502-83120
FILE NAME: B-G-011
SHEET NO.
B-G-011

A	AIR
A/C	AIR CONDITIONING
AASHTO	AMERICAN ASSOCIATION OF STATE HIGHWAY AND TRANSPORTATION OFFICIALS
AB	ANCHOR BOLT
ABAN	ABANDON
ABAND	ABANDONED
ABBR	ABBREVIATION
ABS	ABSOLUTE TEMPERATURE
AC	ACTIVATED CARBON / ASPHALTIC CONCRETE / ALTERNATING CURRENT
ACI	AMERICAN CONCRETE INTERNATIONAL
ACOUS	ACOUSTIC / ACOUSTICAL
ACP	ASBESTOS CEMENT PIPE / ASPHALTIC CONCRETE PAVEMENT
ADD	ADDITIONAL
ADH	ADHESIVE
ADJ	ADJUSTABLE
AER	AERATION
AFF	ABOVE FINISHED FLOOR
AISC	AMERICAN INSTITUTE OF STEEL CONSTRUCTION
ALT	ALTERNATE
ALUM	ALUMINUM
AMB	AMBIENT
ANSI	AMERICAN NATIONAL STANDARDS INSTITUTE
API	AMERICAN PETROLEUM INSTITUTE
APPD	APPROVED
APPROX	APPROXIMATE
APPURTS	APPURTENANCES
ARCH	ARCHITECTURE
AREA	AMERICAN RAILWAY ENGINEERING ASSOCIATION
ARV	AIR RELEASE VALVE
ASME	AMERICAN SOCIETY OF MECHANICAL ENGINEERS
ASPH	ASPHALT
ASST	ASSESSMENT
ASTM	AMERICAN SOCIETY FOR TESTING AND MATERIALS
AT	ACOUSTICAL TILE
ATM	ATMOSPHERE
AV/AR	AIR VACUUM AND AIR RELEASE VALVE
AVE	AVENUE
AWPA	AMERICAN WOOD PRESERVERS ASSOCIATION
AWS	AMERICAN WELDING SOCIETY
AWWA	AMERICAN WATER WORKS ASSOCIATION
B&S	BELL AND SPIGOT
B/W	BACK OF WALL / BACK OF WALK
BC	BEGIN CURVE/BOLT CIRCLE/BETWEEN CENTERS
BCR	BEGIN CURB RETURN
BD	BOARD
BDRY	BOUNDARY
BF	BLIND FLANGE / BOTTOM OF FOOTING
BFP	BACK FLOW PREVENTER
BHP	BRAKE HORSEPOWER
BLDG	BUILDING
BLK	BLACK / BLOCK
BLKG	BLOCKING
BLVD	BOULEVARD
BM	BEAM / BENCH MARK
BO	BLOW-OFF ASSEMBLY
BOD	BIOCHEMICAL OXYGEN DEMAND
BOP	BOTTOM OF PIPE
BOT	BOTTOM
BOV	BLOW OFF VALVE
BPV	BACK PRESSURE VALVE
BRK	BRICK / BREAK
BSMT	BASEMENT
BT	BOLT
BTU	BRITISH THERMAL UNIT
BV	BUTTERFLY VALVE
BVC	BEGIN VERTICAL CURVE
BWV	BACK WATER VALVE
C	CENTIGRADE / CHANNEL / CEMENT
C&G	CURB AND GUTTER
CAB	CABINET / CRUSHED AGGREGATE BASE
CAP	CAPACITY
CATS	CASING TEST STATION
CAV	COMBINATION AIR VACUUM
CB	CATCH BASIN / CHALK BOARD / CURB
CBL	CONSTRUCTION BASELINE
CC	CLOSED CIRCUIT TV / CENTER TO CENTER
CD	CEILING DIFFUSER
CEM	CEMENT
CF	CURB FACE OF CUBIC FOOT
CFH	CUBIC FEET PER HOUR
CFM	CUBIC FEET PER MINUTE
CFS	CUBIC FEET PER SECOND
CHEM	CHEMICAL
CHG	CHANGE
CHKD	CHECKERED
CI	CAST IRON
CIP	CAST IRON PIPE / CAST IN PLACE
CIPP	CAST IN PLACE PIPE
CJ	CONSTRUCTION JOINT
CL	CHLORINE GAS / CHLORINATOR / CENTERLINE
CLF	CHAIN LINK FENCE
CLG	CEILING
CLOS	CLOSET
CLR	CLEAR / CLEARANCE
CM	CENTIMETER
CMB	CRUSHED MISCELLANEOUS BASE
CMC	CEMENT MORTAR-COATED
CML	CEMENT MORTAR-LINED
CML&C	CEMENT LINED AND COATED
CMP	CORRUGATED METAL PIPE
CMU	CONCRETE MASONRY UNIT
CO	CLEANOUT
COL	COLUMN
COMP	COMPRESSOR
CONC	CONCRETE / CONCENTRIC
COND	CONDENSER / CONDENSATE
CONN	CONNECTION
CONST	CONSTRUCT / CONSTRUCTION
CONT	CONTINUED / CONTINUOUS
CONTR	CONTRACTOR
COORD	COORDINATE
COR	CORNER
COTG	CLEANOUT TO GRADE
CPLG	COUPLING
CPVC	CHLORINATED POLYVINYL CHLORIDE
CS	CAUSTIC SODA / CAST STEEL
CSP	CORRUGATED STEEL PIPE
CSTS	CURRENT SPAN TEST STATION
CT	CERAMIC TILE
CTR	CENTER
CTS	CORROSION TEST STATION
CTSK	COUNTERSUNK
CU	COPPER / CUBIC
CULV	CULVERT
CV	CHECK VALVE
CY	CUBIC YARD
CYL	CYLINDER
d	PENNY
DAD	DOUBLE ACTING DOOR
DAFT	DISSOLVED AIR FLOTATION THICKENER
DB	DIRECT BURY
DBL	DOUBLE
DC	DIRECT CURRENT
DEG	DEGREE
DET	DUCTILE IRON
DF	DRINKING FOUNTAIN / DOUGLAS FIR
DG	DOUBLE HUNG
DH	DOUBLE HUNG
DI	DUCTILE IRON
DIA	DIAMETER
DIAG	DIAGONAL
DIAPH	DIAPHRAGM
DIFF	DIFFUSER / DIFFERENTIAL
DIP	DUCTILE IRON PIPE
DIR	DIRECTION
DISCH	DISCHARGE
DISP	DISPENSER
DL	DEAD LOAD
DMH	DROP MANHOLE
DN	DOWN
DO	DISSOLVED OXYGEN / DITTO
DR	DOOR / DRAIN
DS	DRENCH SHOWER AND EYE WASH
DT	DRAIN TILE
DWG	DRAWING
DWLS	DOWELS
DWY	DRIVEWAY
E	EAST / ELECTRICAL
E/O	EAST OF
EA	EACH
EB	EXPANSION BOLT OR ANCHOR
EC	END CURVE
ECC	ECCENTRIC
ECR	END CURB RETURN
EDS	EFFLUENT DISPOSAL SITE
EF	EACH FACE / EXHAUST FAN
EFF	EFFLUENT
EG	EXISTING GRADE / EDGE OF GUTTER / EXHAUST GRILLE
EGL	ENERGY GRADE LINE
EL	ELEVATION
ELEC	ELECTRICAL / ELECTRONIC
EMH	ELECTRICAL MANHOLE
EN	EDGE NAILING
ENCL	ENCLOSURE
ENG	ENGINE
ENGR	ENGINEER
ENT	ENTRANCE
EP	EDGE OF PAVEMENT
EPT	ETHYLENE PROPYLENE
EQ	EQUAL
EQUIP	EQUIPMENT
ESA	ENVIRONMENTALLY SENSITIVE AREA
ESMT	EASEMENT
ETB	EMULSION TREATED BASE
ETC	ET CETERA
EVAP	EVAPORATOR
EVC	END VERTICAL CURVE
EW	EACH WAY / EYE WASH
EX	EXISTING
EXC	EXCAVATION
EXH	EXHAUST
EX-HY	EXTRA HEAVY
EXIST	EXISTING
EXP	EXPANSION
EXT	EXTERIOR / EXTENSION
EXTR	EXTRUDED
F	FAHRENHEIT / FINISH
F TO F	FACE TO FACE
F&C	FRAME AND COVER
F&I	FURNISH AND INSTALL
FAB	FABRICATE / FABRICATION
FAI	FRESH AIR INTAKE
FB	FLAT BAR / FLOOR BEAM / FIELD BOOK
FCO	FLOOR CLEANOUT
FD	FLOOR DRAIN
FDR	FEEDER
FE	FIRE EXTINGUISHER / FINAL EFFLUENT
FEM	FEMALE (PIPE THREAD)
FF	FLAT FACE / FAR FACE / FINISHED FLOOR
FG	FINISHED GRADE
FH	FIRE HYDRANT / FLAT HEAD
FIG	FIGURE
FIN	FINISHED
FIX	FIXTURE
FL	FLOWLINE / FLOOR
FLEX	FLEXIBLE
FLG	FLANGE / FLOORING
FLGD	FLANGED
FLOCC	FLOCCULATOR / FLOCCULATION
FLR	FLOOR
FLSG	FLASHING
FM	FACTORY MUTUAL (LAB. APPROVED) / FORCE MAIN
FMH	FLEXIBLE METAL HOSE
FN	FIELD NAILING
FND	FOUNDATION
FO	FIBER OPTIC
FOC	FACE OF CONCRETE / FIBER OPTIC CABLE
FOCC	FIBER OPTIC CABLE CONDUIT
FOM	FACE OF MASONRY
FOMH	FIBER OPTIC MANHOLE
FOS	FACE OF STUDS
FOW	FACE OF WALL
FPC	FLEXIBLE PIPE COUPLING
FPM	FEET PER MINUTE
FPS	FEET PER SECOND
FPTS	FOREIGN PIPE TEST STATION
FR	FRAME
FRP	FIBERGLASS REINFORCED PLASTIC
FS	FINISHED SURFACE / FARSIDE / FLOOR SINK / FORGED STEEL / FROTH SPRAY
FT	FEET / FOOT
FTG	FOOTING
FUR	FURRING
FUT	FUTURE
FV	FIELD VERIFY
FWD	FORWARD
G	GAS
GA	GAGE / GAUGE
GAL	GALLON
GALV	GALVANIZED
GANC	GUY ANCHOR
GB	GRADE BREAK
GEN	GENERAL / GENERATOR
GFA	GROOVED FLANGE ADAPTER
GI	GALVANIZED IRON
GIP	GALVANIZED IRON PIPE
GL	GLASS / GROUND LINE / GRADE LINE
GLB	GLUE LAMINATED BEAM
GLV	GLOBE VALVE
GM	GAS METER
GP	GUY POLE / GRINDER PUMP
GPD	GALLONS PER DAY
GPH	GALLONS PER HOUR
GPM	GALLONS PER MINUTE
GR	GRADE
GRD	GRADE / GROUND
GRTG	GRATING
GSP	GALVANIZED STEEL PIPE
GV	GATE VALVE
GYP	GYPSUM
H	HIGH / HEIGHT
H&V	HEATING AND VENTILATING
H/B	HOSE BIBB
HC	HOUSE CONNECTION
HDD	HORIZONTAL DIRECTIONAL DRILLING
HDR	HEADER
HDW	HARDWARE
HDWL	HEADWALL
HEX	HEXAGONAL
Hg	MERCURY
HGL	HYDRAULIC GRADE LINE
HGR	MANGER
HM	HOLLOW METAL
HORZ	HORIZONTAL
HP	HIGH POINT / HORSE POWER / HIGH PRESSURE
HPG	HIGH PRESSURE GAS
HR	HEAT RETURN / HOUR
HTG	HEATING
HTR	HEATER
HV	HORIZONTAL AND VERTICAL CONTROL POINT
HVAC	HEATING, VENTILATION AND AIR CONDITIONING
HW	HOT WATER / HEADWORK
HWD	HARDWOOD
HWL	HIGH WATER LEVEL
HWO	HANDWHEEL OPERATED
HYD	HYDRAULIC / HYDRANT
I&O	INSIDE AND OUTSIDE
ID	INSIDE DIAMETER
IF	INSIDE FACE
IJTS	INSULATING JOINT TEST STATION
IN	INCH
INCL	INCLUDE / INCLUDING
INFL	INFLUENT
INSL	INSULATION
INSP	INSPECTION
INST	INSTRUMENT
INT	INTERIOR
INV	INVERT
IP	IRON PIPE
IPS	IRON PIPE SIZE
IRRG	IRRIGATION
JAN	JANITOR
JC	JUNCTION CHAMBER
JCT	JUNCTION
JS	JUNCTION STRUCTURE
JSTS	JOISTS
JT	JOINT
K	KELVIN / KILO / KARAT
KG	KILOGRAM
KM	KILOMETER
KV	KILOVOLT
KW	KILOWATT
KWH	KILOWATT HOUR
L	LITER / LENGTH / ANGLE
LAB	LABORATORY
LAM	LAMINATED
LAT	LATERAL
LAV	LAVATORY
LB	POUND
LCP	LOCAL CONTROL PANEL
LD	LOCAL DEPRESSION
LDG	LANDING
LEV	LEVEL
LF	LINEAR FOOT
LG	LENGTH / LONG
LH	LAMP HOLE / LEFT HAND
LL	LIVE LOAD
LLH	LONG LEG HORIZONTAL
LLV	LONG LEG VERTICAL
LOC	LOCATION
LOCSD	LOS OSOS COMMUNITY SERVICES DISTRICT
LOL	LAYOUT LINE
LONG	LONGITUDINAL
LP	LOW POINT / LOW PRESSURE / LAMP POST
LT	LEFT / LIGHT
LTS	LIME TREATED SOIL
LW	LOW WATER
LWL	LOW WATER LEVEL
LWR	LOWER
M	METER / MALE (PIPE THREAD)
MACH	MACHINE
MAG	MAGNETIC
MAINT	MAINTENANCE
MAN	MANUAL
MAS	MASONRY
MATL	MATERIAL
MAX	MAXIMUM
MB	MAIL BOX / MACHINE BOLT
MCC	MOTOR CONTROL CENTER
MCR	MIDDLE OF CURB RETURN
MEAS	MEASURE
MECH	MECHANICAL
MED	MEDIUM
MEMB	MEMBER
MFRD	MANUFACTURED
MGD	MILLION GALLONS PER DAY
MH	MANHOLE
MHT	MEAN HIGH TIDE
MHW	MEAN HIGH WATER
MI	MALLEABLE IRON / MILE
MICRON	1/1,000,000 METER
MIL	MILITARY / 1/1,000 TH INCH
MIN	MINIMUM / MINUTE
MIR	MIRROR
MISC	MISCELLANEOUS
MK	MARK
MLW	MEAN LOW WATER
mm	MILLIMETER
MO	MOTOR OPERATED / MASONRY OPENING
MOD	MODEL
MON	MONUMENT
MOR	MORTAR
MS	MOP SINK
MSL	MEAN SEA LEVEL
MTC	MECHANICAL-TYPE COUPLING
MTD	MOUNTED
MTG	MOUNTING
MTL	METAL
MTR	MOTOR
MW	MONITORING WELL
MVMH	MEDIUM VOLTAGE MANHOLE
N	NORTH
NaOCL	SODIUM HYPOCHLORITE
NaOH	SODIUM HYDROXIDE (CAUSTIC SODA)
NBS	NATIONAL BUREAU OF STANDARDS
NC	NORMALLY CLOSED
NEC	NATIONAL ELECTRICAL CODE
NEMA	NATIONAL ELECTRICAL MANUFACTURES ASSOCIATION
NF	NEAR FACE
NFPA	NATIONAL FIRE PROTECTION ASSOCIATION
NG	NATURAL GRADE / NATURAL GAS
NIC	NOT IN CONTRACT
NO	NUMBER / NORMALLY OPEN
NOM	NOMINAL
NPS	NOMINAL PIPE SIZE
NPT	NATIONAL PIPE THREAD
NRCP	NONREINFORCED CONCRETE PIPE
NRS	NON-RISING STEM
NS	NEAR SIDE
NTS	NOT TO SCALE
OBJ	OBJECT
OC	ON CENTER / OVER-CROSSING
OD	OUTSIDE DIAMETER / OVERALL DIMENSION
OE	OUTER EDGE
OF	OVERFLOW / OUTSIDE FACE
OFD	OVERFLOW DRAIN
OFF	OFFICE
OH	OVER HEAD
OPER	OPERATOR / OPERATING
OPNG	OPENING
OPP	OPPOSITE
ORIG	ORIGINAL
OS&Y	OUTSIDE SCREW AND YOKE
OSA	OUTSIDE AIR
OSHA	OCCUPATIONAL SAFETY AND HEALTH ADMINISTRATION
OWG	OIL. WATER. GAS
OZ	OUNCE
P	POLE / PAGE / PIPE
P/S	POLE AND SHELF
PA	PLANTING AREA
PART	PARTITION
PAVMT	PAVEMENT
PB	POLYBUTYLENE / PULL BOX
PC	POINT OF CURVATURE / PRIMARY CLARIFIER / PORTLAND CEMENT
PCC	PORTLAND CEMENT CONCRETE / POINT OF COMPOUND CURVE
PCOTG	PRESSURE CLEANOUT TO GRADE
PCVC	POINT OF COMPOUND VERTICAL CURVE
PD	POWER DUCT
PE	POLYETHYLENE / PLANT EFFLUENT / POLYELECTROLYTE POLYMER
PG	PRESSURE GAGE
pH	HYDROGEN ION CONCENTRATION
PI	PLANT INFLUENT / POINT OF INTERSECTION
PK	PARKING
PL	PLATE / PROPERTY LINE / PLACE
PLAS	PLASTER / PLASTIC
PLT	PLANT
PLWD	PLYWOOD
PM	PRESSED METAL
PNEU	PNEUMATIC
PNL	PANEL
POB	POINT OF BEGINNING
POC	POINT OF CONNECTION
POT	POINT OF TANGENT
PP	POWER POLE / POLYPROPYLENE / PLAN AND PROFILE
PPD	POUNDS PER DAY
PPH	POUNDS PER HOUR
PPM	POUNDS PER MINUTE
PR	PAIR
PRC	POINT OF REVERSE CURVE
PRCT	PRECAST
PREFAB	PREFABRICATED
PRESS	PRESSURE
PROF	PROFILE
PRV	PRESSURE REGULATING, RELIEF OR REDUCING VALVE
PRVC	POINT OF REVERSE VERTICAL CURVE
PS	PRESSURE SWITCH
PSF	POUNDS PER SQUARE FOOT
PSI	POUNDS PER SQUARE INCH
PSIA	POUNDS PER SQUARE INCH ABSOLUTE
PSIG	POUNDS PER SQUARE INCH GAUGE
PT	POINT OF TANGENCY / PAINT / PRESSURE TREATED
PTFE	POLYTETRAFLUOROETHYLENE (TEFLON)
PV	PLUG VALVE
PVC	POLYVINYL CHLORIDE
PVDF	POLYVINYLIDENE FLUORIDE (KYNAR)
PW	POTABLE WATER
QT	QUARRY TILE
QTY	QUANTITY
QUAD	QUADRANGLE / QUADRANT
R	RADIUS / RISER / RATE OF SLOPE
R&O	ROCK AND OIL
R/W	RIGHT OF WAY
RAC	RECYCLED ASPHALT CONCRETE
RAG	RETURN AIR GRILLE
RAP	RECLAIMED ASPHALT PAVEMENT
RAS	RETURN ACTIVATED SLUDGE
RC	REINFORCED CONCRETE
RCP	REINFORCED CONCRETE PIPE
RD	ROAD / ROOF DRAIN / ROUND
RED	REDUCER / REDUCING
REF	REFERENCE / REFER / REFRIGERATOR
REG	REGULATING
REINF	REINFORCE / REINFORCED
REQD	REQUIRED
RESIL	RESILIENT
RET	RETAINING / RETURN
REV	REVISION
REW	RECYCLED EFFLUENT WATER
RF	ROOF / RAISED FOUNDATION / ROUGH FACE
RFG	ROOFING
RGE	REGISTERED GEOTECHNICAL ENGINEER
RH	REDHEAD / RIGHT HAND
RM	ROOM
RO	ROUGH OPENING
RPM	REVOLUTIONS PER MINUTE
RR	RAILROAD
RS	RISING STEM
RSL	RAW SLUDGE
RT	RIGHT
RTP	REINFORCED THERMOSETTING PLASTIC
RW	REDWOOD
RWL	RAINWATER LEADER
RWQCB	REGIONAL WATER QUALITY CONTROL BOARD
S	SOUTH / SCUM / SINK / SECOND / SLOPE / SAND
S/O	SOUTH OF
SA	SAMPLE
SAN	SANITARY
SBC	SOUTHWEST BELL CORPORATION
SBR	STYRENE BUTADENE (RUBBER)
SC	SPARE CHEMICAL / SECONDARY CLARIFIER
SCCP	STEEL CYLINDER CONCRETE PIPE
SCD	SCREWED
SCFM	STANDARD CUBIC FEET PER MINUTE
SCH	SCHEDULE
SD	STORM DRAIN
SDFM	STORM DRAIN FORCE MAIN
SDR	STANDARD THERMOPLASTIC PIPE DIMENSION RATIO
SEC	SECONDARY / SECTION
SER	SERIES
SETT	SETTING
SF	SQUARE FOOT
SHELV	SHOWER
SHT	SHELVING
SHTG	SHEET
SIM	SHEATHING
SL	SIMILAR
SLOC	SLUDGE
SLDG	SAN LUIS OBISPO COUNTY
SLG	SLIDING
SOG	SLUICE GATE
SOLN	SLAB ON GRADE
SP	SOLUTION
SPEC	STATIC PRESSURE / SURGE PROTECTION
SPK	SPECIFICATION
SQ	SPIKE
SS	SQUARE
SSBWC	STAINLESS STEEL / SANITARY SEWER / SERVICE SINK
SSU	SELECT SUB-BASE
ST	STANDARD SPECIFICATION FOR PUBLIC WORKS CONSTRUCTION
STA	SECONDS SAYBOLT UNIVERSAL
STC	STREET / STATE
STD	STATION
STK	SLEEVE-TYPE COUPLING
STL	STANDARD
STM	STAKE
STR	STEEL
SUCT	STEAM
SV	STRAIGHT / STRUCTURAL
SW	SUCTION
SWD	SOLENOID VALVE
SWGR	SIDEWALK
SWR	SIDEWALK DRAIN
SY	SWITCHGEAR
SYM	SIDEWALL REGISTER
SYS	SQUARE YARD
	SYMMETRICAL / SYMBOL
	SYSTEM
T	THERMOSTAT / TREAD OF STAIR / TANGENT / TOP
T&B	TOP AND BOTTOM
T&G	TONGUE AND GROOVE
TAN	TANGENT
TB	TACK BOARD
TBE	THREAD BOTH ENDS
TBM	TEMPORARY BENCH MARK
TC	TOP OF CURB
TCV	TEMPERATURE CONTROL VALVE
TEL	TELEPHONE
TEMP	TEMPERATURE / TEMPORARY
TF	TOP OF FOOTING
TH	TEST HOLE
THK	THICK / THICKNESS
THR	THRESHOLD
THR'D	THREADED
TK	TANK / TACK
TL	TRAVERSE LINE
TOC	TOP OF CONCRETE
TOE	THREAD ONE END
TOL	TOILET
TOM	TOP OF MASONRY
TOP	TOP OF PIPE
TOPO	TOPOGRAPHIC
TOS	TOP OF STEEL
TOW	TOP OF WALL
TP	TELEPHONE POLE
TR	TRACT
TRANS	TRANSMITTER / TRANSITION /TRANSMISSION
TS	TRAFFIC SIGNAL
TSB	TOP SET BASE
TSC	TRAFFIC SIGNAL CONDUIT
TV	THERMOSTATIC VALVE / TELEVISION
TW	THERMOMETER WELL /TRAVELED WAY
TYP	TYPICAL
UB	UNION BONNET
UBC	UNIFORM BUILDING CODE
UC	UNDER-CROSSING
UG	UNDERGROUND
UGC	UNDERGROUND CONDUIT
UH	UNIT HEATER
UL	UNDERWRITERS LABORATORIES
UNO	UNLESS NOTED OTHERWISE
UOI	UNLESS OTHERWISE INDICATED
UR	URINAL
USA	UNDERGROUND SERVICE ALERT
USGS	UNITED STATES GEOLOGICAL SURVEY
V	VALVE / VERTICAL / VENT / VOLT / VOLUME
VAC	VACUUM
VAR	VARIES / VARIABLE
VB	VALVE BOX
VC	VERTICAL CURVE
VCP	VITRIFIED CLAY PIPE
VERT	VERTICAL
VOL	VOLUME
VPI	VERTICAL POINT OF INTERSECTION
VTC	VENT TO CEILING
VTR	VENT THROUGH ROOF
VWC	VINYL WALL COVERING
VWM	VERIFY WITH MANUFACTURE
W	WEST / WASTE / WIDTH / WIDE FLANGE / WATER
W/	WITH
W/O	WEST OF / WITHOUT
WC	WATER COLUMN / WATER CLOSET
WCO	WALL CLEANOUT
WD	WOOD
WDW	WINDOW
WH	WATER HEATER
WI	WROUGHT IRON
WM	WATER METER
WOG	WATER, OIL, OR GAS
WP	WATER PROOFING / WORKING PRESSURE / WORK POINT
WPJ	WEAKEN PLANE JOINT
WS	WATER SURFACE
WSTP	WATER STOP
WT	WEIGHT
WWF	WELDED WIRE FABRIC
WWP	WATER WORKING PRESSURE
WWTF	WASTEWATER TREATMENT FACILITY
XCONN	CROSS CONNECTION
XS	EXTRA STRONG
XSEC	CROSS SECTION
XXS	DOUBLE EXTRA STRONG
YD	YARD
YR	YEAR
Z	ZERO / ZONE
ZN	ZINC
#	POUND
&	AND
@	AT

OTHER ABBREVIATIONS CONFORM TO ANSI STANDARD ABBREVIATIONS Z32.2.3

©2012 CDM SMITH ALL RIGHTS RESERVED.
REUSE OF DOCUMENTS: THESE DOCUMENTS AND DESIGNS PROVIDED BY PROFESSIONAL SERVICE, INCORPORATED HEREIN, ARE THE PROPERTY OF CDM SMITH AND ARE NOT TO BE USED, IN WHOLE OR PART, FOR ANY OTHER PROJECT WITHOUT THE WRITTEN AUTHORIZATION OF CDM SMITH.
S:\Los Osos\Walnut Creek\G\Area B & C\ B-G-012 04/03/12 08:24 bullockll XREFS: LosOsos-bdr, X-GEN-ABBREVS, CA-BJC

REV. NO.	DATE	DRWN	CHKD	REMARKS

DESIGNED BY: BJC
DRAWN BY: JAW
CHECKED BY: MDM
DATE: APRIL, 2012

CDM Smith
2295 Gateway Oaks Drive, Suite 240
Sacramento, CA 95833
Tel: (916) 567-9900

0 1/2 1
IF THIS BAR DOES NOT MEASURE 1" THEN ADJUST SCALE ACCORDINGLY

REGISTERED PROFESSIONAL ENGINEER BRUCE JAMES CORWIN C 061414 Exp. 09/30/12 CIVIL STATE OF CALIFORNIA

DIGALERT
DIAL TOLL FREE 1-800-642-2444
AT LEAST TWO DAYS BEFORE YOU DIG
UNDERGROUND SERVICE ALERT OF NORTHERN CALIFORNIA

LOS OSOS WASTEWATER COLLECTION SYSTEM

GENERAL ABBREVIATIONS

PROJECT NO.42502-83120
FILE NAME: B-G-012
SHEET NO.
B-G-012

TRAFFIC CONTROL PLANS FOR THE LOS OSOS WASTEWATER COLLECTION SYSTEM AREA B COUNTY OF SAN LUIS OBISPO, CALIFORNIA

GENERAL NOTES:

1. TRAFFIC CONTROL PLANS DO NOT SHOW ALL WORK REQUIRED TO BE COMPLETED. WORK NOT NECESSARY FOR TRAFFIC CONTROL MAY BE COMPLETED AT ANY TIME AND IS NOT SHOWN.
2. CONTRACTOR SHALL INSTALL AND MAINTAIN THE TRAFFIC CONTROL DEVICES AS SHOWN HEREIN, AS WELL AS ANY ADDITIONAL TRAFFIC CONTROL DEVICES AS MAY BE REQUIRED TO ENSURE THE SAFE MOVEMENT OF TRAFFIC AND PEDESTRIANS THROUGH OR AROUND THE CONSTRUCTION AREA AND TO PROVIDE MAXIMUM PROTECTION AND SAFETY TO CONSTRUCTION WORKERS.
3. THE ENGINEER RESERVES THE RIGHT TO OBSERVE TRAFFIC CONTROL PLANS IN USE AND TO MAKE NECESSARY CHANGES AS FIELD CONDITIONS WARRANT. ANY CHANGES SHALL SUPERCEDE THESE PLANS AND SHALL BE PROVIDED AT NO ADDITIONAL COST/TIME TO THE OWNER.
4. ALL TEMPORARY TRAFFIC CONTROL DEVICES SHALL BE REMOVED FOLLOWING COMPLETION OF EACH CONSTRUCTION PHASE.
5. CONTRACTOR SHALL REPLACE OR REPAIR ALL DAMAGED STRIPING WITH TEMPORARY STRIPING OR RAISED PAVEMENT MARKERS AT THE END OF EACH WORKING DAY.
6. CONTRACTOR SHALL TEMPORARILY COVER OR REMOVE ALL CONFLICTING SIGNS.
7. ALL SIGNS, STRIPING, PAVEMENT MARKINGS, CHANNELIZERS, BARRICADES, TEMPORARY RAILING, TEMPORARY CRASH CUSHIONS AND OTHER TRAFFIC CONTROL DEVICES SHALL BE IN ACCORDANCE WITH THE LATEST CALTRANS STANDARD PLANS AND STANDARD SPECIFICATIONS.
8. ALL EXISTING SIGNING NOT IN CONFORMANCE WITH THE DETOUR PLANS SHALL BE COVERED FOR THE DURATION OF THE DETOUR. ALL EXISTING STOP SIGNS SHALL BE RELOCATED AS REQUIRED TO BE VISIBLE FROM ALL RELOCATED TRAFFIC LANES.
9. ALL EXISTING FACILITIES, INCLUDING SIGNING, STRIPING, SIGNS, MARKING, AND MARKERS NOT INDICATED TO BE REMOVED SHALL BE RESTORED TO THE ORIGINAL CONDITION AND/OR LOCATION AT THE END OF THE CONSTRUCTION PERIOD.
10. ALL TEMPORARY FACILITIES CONSTRUCTED FOR THE PURPOSES OF EACH DETOUR SHALL BE REMOVED AT THE COMPLETION OF THE CONSTRUCTION PERIOD.
11. CONSTRUCTION TRAFFIC CONTROL SHALL CONFORM TO THE LATEST MANUAL OF UNITOFRM TRAFFIC CONTROL DEVICES (MUTCD), 2010 CALIFORNIA EDITION.
12. ALL STRIPING, MARKINGS, SIGNINGS, BARRICADES, AND MARKERS SHALL BE INSTALLED PER THE MUTCD, CALTRANS TRAFFIC MANUAL AND THE REQUIREMENTS OF THE COUNTY OF SAN LUIS OBISPO.
13. ALL ADVANCE WARNING SIGNS FOR DETOURS SHALL BE 48"X48" MINIMUM OR LARGER UNLESS OTHERWISE SPECIFIED.
14. ALL ADVANCE WARNING SIGNS SHALL BE REFLECTORIZED.
15. THE LOCATION OF ALL SIGNS SHOWN ARE ONLY APPROXIMATE AND THE EXACT LOCATION SHALL BE DETERMINED IN THE FIELD BY THE ENGINEER.
16. THE CONTRACTOR SHALL PROVIDE SAFE AND CONTINUOUS PASSAGE OF PEDESTRIANS, BICYCLE AND VEHICULAR TRAFFIC AT ALL TIMES.
17. THE CONTRACTOR SHALL BE RESPONSIBLE FOR THE PROPER INSTALLATION, CONTINUAL MAINTENANCE AND THE REMOVAL OF TRAFFIC CONTROL DEVICES SPECIFIED IN THE MUTCD.
18. CONTRACTOR SHALL NOTIFY THE COUNTY TRAFFIC SIGNAL AND STREET LIGHTING SUPERVISOR FIVE (5) WORKING DAYS PRIOR TO ANY EXCAVATION OR CONSTRUCTION WITHIN 20 FEET OF EXISTING TRAFFIC SIGNAL DETECTOR LOOPS, CONDUITS, INTERCONNECTS, OR FIBER OPTIC CABLE.
19. ANY DAMAGE TO TRAFFIC SIGNAL DETECTOR LOOPS, CONDUITS, INTERCONNECTS, FIBER OPTIC CABLE OR COMMUNICATION CABLE SHALL BE REPAIRED IMMEDIATELY BY THE CONTRACTOR AT THEIR OWN EXPENSE. REPAIR SHALL BE A COMPLETE REINSTALLATION OF NEW CONDUCTORS FOR THE ENTIRE LENGTH FROM THE TERMINAL CABINET. IN-LINE SPACING IS NOT ALLOWED, DELAYS IN REPAIR OF INTERCONNECT OR FIBER OPTIC CABLE WILL REQUIRE THE PAYMENT OF LIQUIDATED DAMAGES TO THE COUNTY OF SAN LUIS OBISPO, DEPARTMENT OF ENVIRONMENTAL AND PUBLIC WORKS.
20. THE CONTRACTOR SHALL BE RESPONSIBLE FOR THE WET SANDBLASTING, TURBOBLASTING OR HYDROBLASTING OF CONFLICTING STRIPING AND PAVEMENT MARKINGS INCLUDING THE CLEANUP OF ALL RESULTING DEBRIS. COVERING OF EXISTING STRIPING WITH BLACK PAINT IS NOT PERMITTED.
21. ANY VEHICULAR OR PEDESTRIAN SIGNS THAT ARE OBSCURED, OR HAVE IMPAIRED OR REDUCED VISIBILITY, SHALL BE REPLACED IMMEDIATELY BY THE CONTRACTOR UPON IDENTIFICATION AND NOTIFICATION OF THE COUNTY TRAFFIC ENGINEER.
22. A 2-FOOT MINIMUM CLEARANCE MUST BE MAINTAINED BETWEEN SURFACE-MOUNTED CHANNELIZERS AND THE LANE AT ALL TIMES, A MINIMUM 10-FOOT WIDE LANE IS REQUIRED ADJACENT TO CURBS, AND WHERE THERE ARE VERTICAL OBSTRUCTIONS.
23. THE CONTRACTOR SHALL INSTALL A 4-INCH SOLID WHITE RIGHT EDGE LINE (DETAIL 27B) AND A 4-INCH SOLID YELLOW LEFT EDGE LINE (DETAIL 25) OR MEDIAN ISLANDS (DETAIL 29) LOCATED AT A MINIMUM OF TWO FEET FROM THE EDGE OF A FENCE, CANOPY, OR K-RAIL TO DELINEATE THE EDGE OF TRAVELED ROADWAY. EDGE LINES MUST ALLOW FOR A MINIMUM 10-FOOT LANE BETWEEN EDGE LINE AND LANE OR CENTER LINE.
24. CONTRACTOR SHALL PROVIDE FLAGGERS FOR SINGLE LANE TRAFFIC CONTROL AND IN OTHER CASES IF NECESSARY FOR THE SAFE PASSAGE OF TRAFFIC. THE FLAGGER SHALL USE ONLY THE APPROVED OCTAGONAL STOP/SLOW PADDLE, SHALL WEAR AN ORANGE SAFETY VEST (REFLECTORIZED FOR NIGHT WORK) AND HARD HAT, AS REQUIRED BY THE CALTRANS CONSTRUCTION MANUAL, AND MUST BE PROPERLY TRAINED BY THE CONTRACTOR IN PERFORMING THE WORK SAFELY. APPROPRIATE ADVANCE SIGNS MUST ALSO BE INSTALLED, PER THE MUTCD AND THE CALTRANS TRAFFIC MANUAL.
25. ALL TRAFFIC SIGNAL CONTROLLER, SIGNAL STANDARDS, AND OTHER ASSOCIATED SIGNAL EQUIPMENT AND PULL BOXES MUST BE ACCESSIBLE AT ALL TIMES TO THE COUNTY'S TRAFFIC SIGNAL REPAIR (TSR) PERSONNEL. ALL FENCES MUST BE INSTALLED SUCH AS TO PERMIT ACCESS BY TSR PERSONNEL AT ALL TIMES.
26. THERE SHALL BE NO STORAGE OF CONSTRUCTION MATERIALS OR EQUIPMENT OUTSIDE THE DESIGNATED WORK AREA AS INDICATED IN THE WORK SITE TRAFFIC PLANS. STORAGE OF CONSTRUCTION MATERIALS OR EQUIPMENT WITHIN THE DESIGNATED AREA SHALL BE DONE IN A MANNER NOT TO CREATE VISIBILITY OBSTRUCTIONS TO THE MOTORING PUBLIC AS DETERMINED BY THE ENGINEER.
27. WHEN WORK IS NOT IN PROGRESS, CONTRACTOR SHALL PROVIDE TEMPORARY STRIPING IN AREAS WHERE EXISTING STRIPING HAS BEEN REMOVED.
28. THE NAME AND PHONE NUMBER (24 HOUR AVAILABILITY) OF THE CONTRACTOR'S SAFETY COORDINATOR AND TRAFFIC CONTROL DEVICE MAINTENANCE MONITOR WILL BE PROVIDED TO THE AUTHORITY AND THE COUNTY'S TRAFFIC ENGINEER AND ANY CHANGE IN ASSIGNED PERSONNEL OR PHONE NUMBER WILL BE REPORTED IMMEDIATELY TO AUTHORITY AND THE COUNTY'S TRAFFIC ENGINEER.
29. ALL TEMPORARY TRAFFIC CONTROL DEVICES SHALL BE REMOVED FOLLOWING COMPLETION OF EACH CONSTRUCTION PHASE. CONTRACTOR SHALL ALSO BE RESPONSIBLE FOR THE RESTORATION OF THE STRIPING, PAVEMENT MARKINGS, AND TRAFFIC CONTROL DEVICES TO THE PERMANENT CONDITION USING CALTRANS APPROVED MATERIALS. THE COUNTY ENGINEER SHALL APPROVE THE CONTRACTORS STRIPING MARKOUT BEFORE THE FINAL INSTALLATION OF STRIPING BY THE CONTRACTOR. NOTIFY THE TRAFFIC ENGINEER TEN (10) WORKING DAYS PRIOR TO FINAL STRIPING INSTALLATION.
30. ALL DRIVEWAYS AND SIDE STREETS SHALL BE KEPT OPEN AT ALL TIMES EXCEPT WHEN CONSTRUCTION TAKES PLACE DIRECTLY IN FRONT OF DRIVEWAY OR SIDE STREET. ALL OPEN EXCAVATIONS ON PUBLIC STREETS SHALL BE BACK-FILLED OR STEEL-PLATED (TRAFFIC RATED, ANTI-SKID) FOR TRAFFIC OUTSIDE THE WORKING HOURS. TRAFFFIC SHALL BE RESTORED TO NORMAL CONDITIONS OUTSIDE THE WORKING HOURS.
31. NOTIFY LOCAL FIRE DEPARTIMENT, POLICE DEPARTMENT, AMBULANCE SERVICES AND TRASH SERVICES 48 HOURS IN ADVANCE OF CONSTRUCTION IN THE VARIOUS STAGE AREAS.
32. CONTRACTOR SHALL INSTALL C40A SIGNS (TRAFFIC FINES DOUBLED IN CONSTRUCTION AREA) ONE FOR EACH DIRECTION, AT THE BEGINNING OF EACH WORK ZONE.
33. FOR STREET DESIGNATIONS AND APPLICABLE SPECIFIC TRAFFIC CONTROL REQUIREMENTS, SEE SECTIONS 1.03 AND 1.04 OF THE PROJECT SPECIFICATIONS, SECTION 01571, TRAFFIC CONTROL.
34. ALSO SEE SPECIFICATIONS SECTION 01571 – TRAFFIC CONTROL FOR ADDITIONAL REQUIREMENTS.

WORK TO BE DONE

THE TRAFFIC CONTROL PLANS CONSIST OF THE FOLLOWING WORK TO BE DONE ACCORDING TO THESE PLANS, SPECIAL PROVISIONS, PROJECT SPECIFICATIONS, AND THE SPECIFICATIONS AND STANDARD DRAWINGS OF THE COUNTY OF SAN LUIS OBISPO, CALIFORNIA.

STANDARD SPECIFICATIONS

1. STANDARDS AND SPECIFICATIONS, COUNTY OF SAN LUIS OBISPO (2011).
2. MANUAL ON UNIFORM TRAFFIC CONTROL DEVICES, 2010 CALIFORNIA EDITION.
3. CALIFORNIA DEPARTMENT OF TRANSPORTATION, STANDARD SPECIFICATIONS (2010).

STANDARD DRAWINGS

1. STANDARD CONSTRUCTION DRAWINGS, SAN LUIS OBISPO COUNTY DEPARTMENT OF PUBLIC WORKS (NOV. 2008).
2. MANUAL ON UNIFORM TRAFFIC CONTROL DEVICES, 2010 CALIFORNIA EDITION.
3. CALIFORNIA DEPARTMENT OF TRANSPORTATION, STANDARD PLANS (2010).

LEGEND:

- CONSTRUCTION AREA
- FIRST ORDER OF WORK
- DIRT STOCKPILE
- TEMPORARY RAILING (TYPE K) WITH TRAFFIC SCREEN
- TEMPORARY CRASH CUSHION MODULES (ARRAY AS NOTED)
- ONE POST SIGN LOCATION
- SURFACE MOUNTED CHANNELIZER
- FLAGPERSON
- BARRICADE
- P — TYPE P MARKER
- NO. (diamond) — CONSTRUCTION SIGN NUMBER
- NO. (circle) — TEMPORARY PAVEMENT DELINEATION DETAIL
- TS — SIGNALIZED INTERSECTION
- DIRECTION OF TRAVEL

CONSTRUCTION AREA SIGNS:

(MANUAL ON UNIFORM TRAFFIC CONTROL DEVICES, 2010 CALIFORNIA EDITION)

G20-2	END ROAD WORK	R11-2	ROAD CLOSED	W1-6		C30A(CA)	SHOULDER CLOSED
W20-1	ROAD WORK AHEAD	W1-4		W20-4	ONE LANE ROAD AHEAD	W3-2	
W20-5(LT)	LEFT LANE CLOSED AHEAD	R4-7		C12(CA)	NARROW LANE	R1-2	YIELD
W20-5(RT)	RIGHT LANE CLOSED AHEAD	C24(CA)	SHOULDER WORK AHEAD	C30(CA)	LANE CLOSED	R1-1	STOP

SCALE: NO SCALE

REV. NO.	DATE	DRWN	CHKD	REMARKS

DESIGNED BY: RDH
DRAWN BY: RDH
CHECKED BY: DAD
DATE: APRIL 2012

CDM Smith
2295 Gateway Oaks Drive, Suite 240
Sacramento, CA 95833
Tel: (916) 567-9900

0 1/2 1
IF THIS BAR DOES NOT MEASURE 1" THEN ADJUST SCALE ACCORDINGLY

REGISTERED PROFESSIONAL ENGINEER DONALD A. DRUSE No.44519 CIVIL STATE OF CALIFORNIA

RICK ENGINEERING COMPANY
711 TANK FARM ROAD · SUITE 110
SAN LUIS OBISPO, CA 93401
805.544.0707
(FAX)805.544.2052
San Diego · Bakersfield · Sacramento
Riverside · Orange · Tucson · Phoenix
rickengineering.com

DIGALERT DIAL TOLL FREE 1-800-642-2444 AT LEAST TWO DAYS BEFORE YOU DIG
UNDERGROUND SERVICE ALERT OF NORTHERN CALIFORNIA

LOS OSOS WASTEWATER COLLECTION SYSTEM
AREA B TRAFFIC CONTROL PLAN GENERAL NOTES, LEGEND AND ABBREVIATIONS

PROJECT NO.42502-83120
FILE NAME: B-TC-01
SHEET NO. B-TC-001

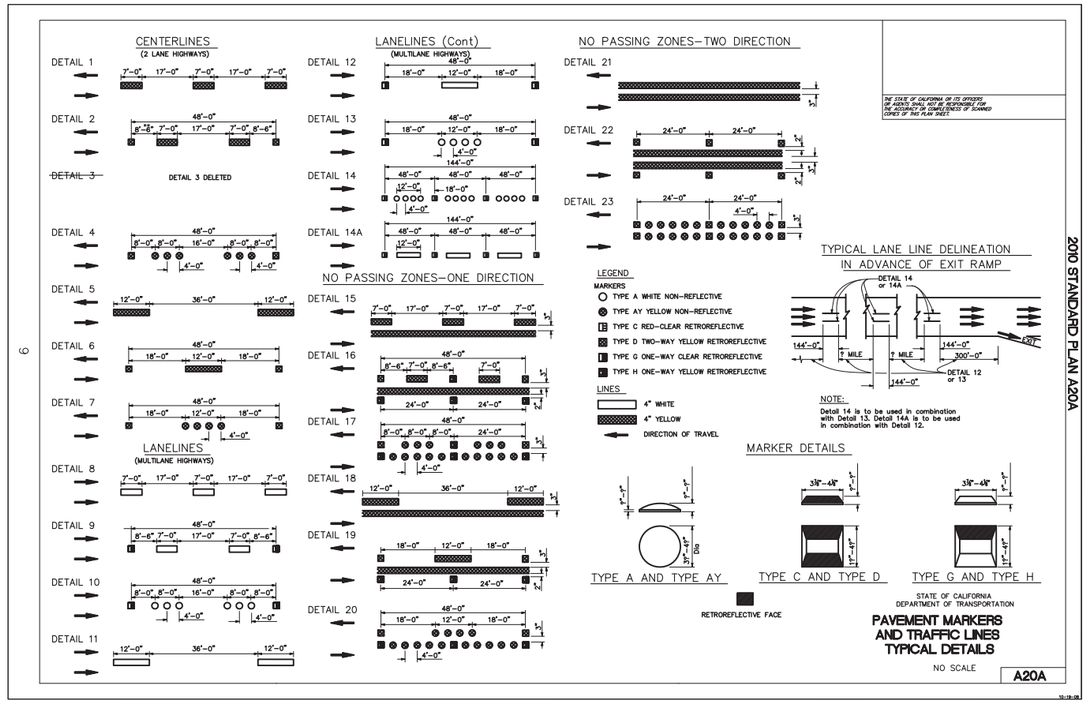

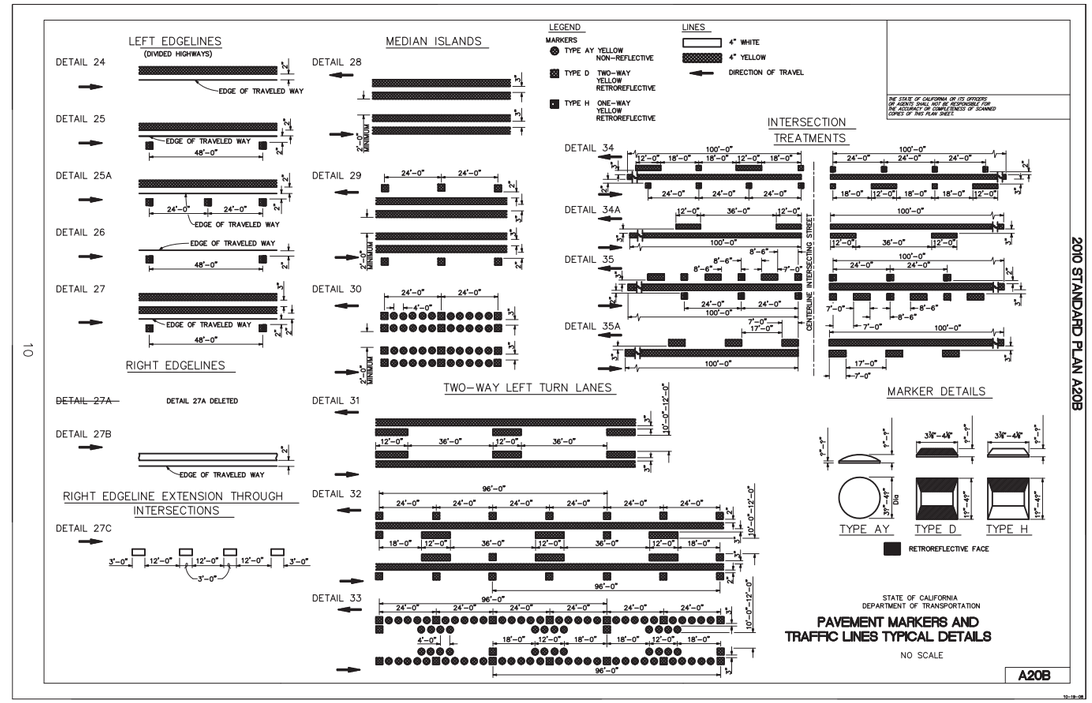

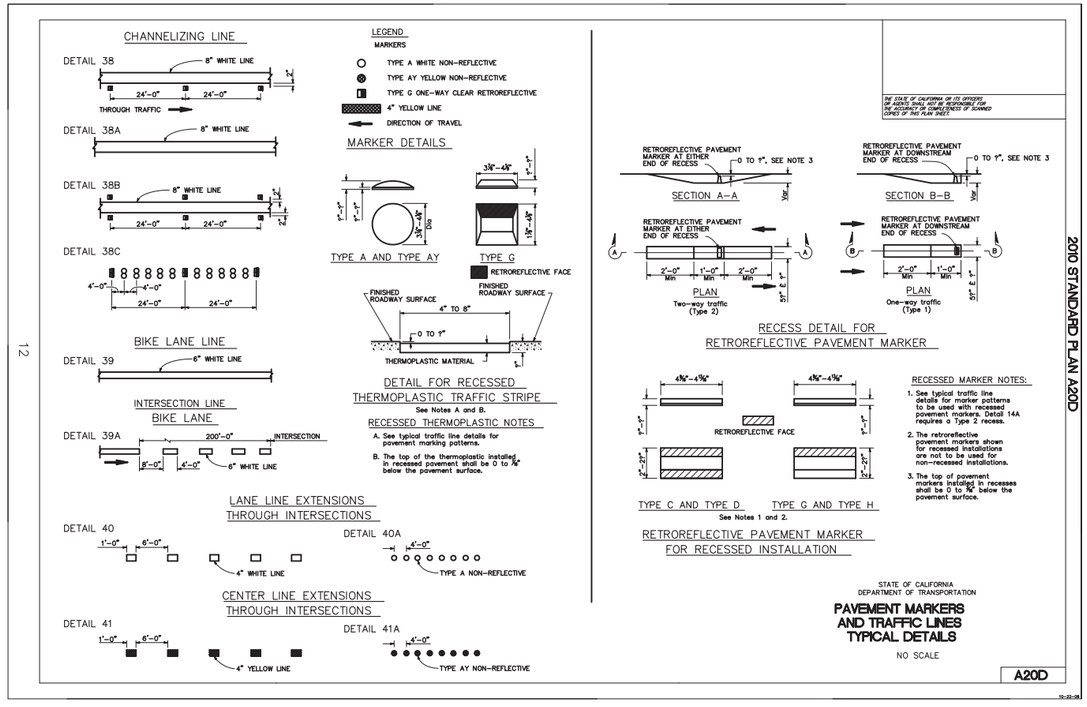

SCALE: NO SCALE

REV. NO.	DATE	DRWN	CHKD	REMARKS

DESIGNED BY: RDH
DRAWN BY: RDH
CHECKED BY: DAD
DATE: APRIL 2012

CDM Smith
2295 Gateway Oaks Drive, Suite 240
Sacramento, CA 95833
Tel: (916) 567-9900

IF THIS BAR DOES NOT MEASURE 1" THEN ADJUST SCALE ACCORDINGLY

REGISTERED PROFESSIONAL ENGINEER — DONALD A. DRIGGS — No.44519 CIVIL — STATE OF CALIFORNIA

RICK ENGINEERING COMPANY

DIGALERT — DIAL TOLL FREE 1-800-642-2444 AT LEAST TWO DAYS BEFORE YOU DIG — UNDERGROUND SERVICE ALERT OF NORTHERN CALIFORNIA

LOS OSOS WASTEWATER COLLECTION SYSTEM

AREA B TRAFFIC CONTROL PLAN
DETAIL SHEETS
PAVEMENT MARKERS AND TRAFFIC LINES

PROJECT NO.42502–83120
FILE NAME: B–TC–02

SHEET NO.
B–TC–002

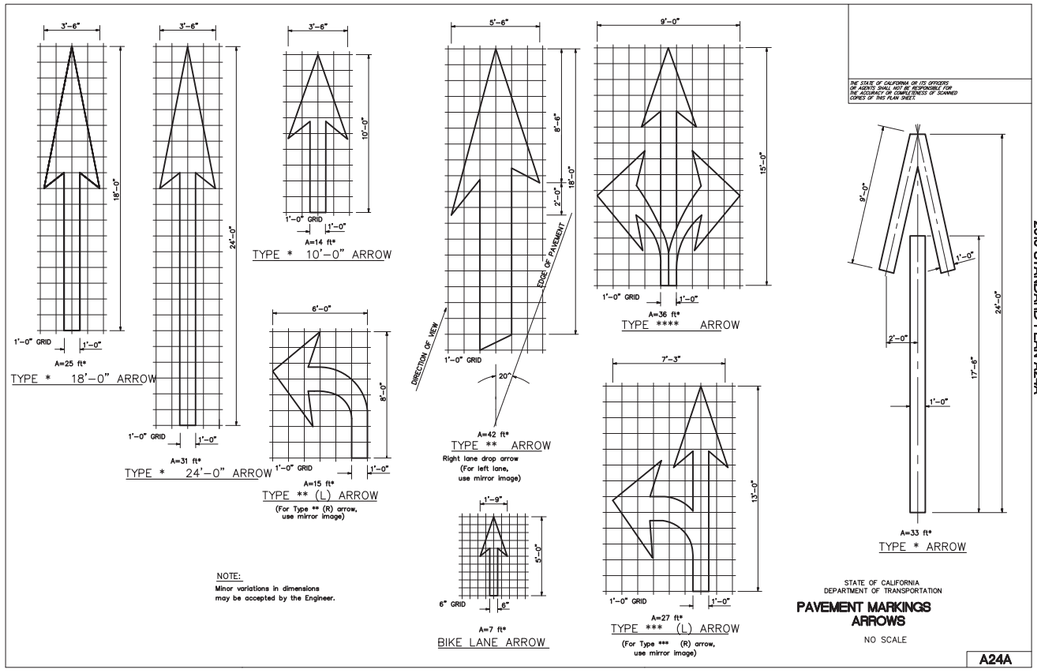

NOTE:
Minor variations in dimensions may be accepted by the Engineer.

THE STATE OF CALIFORNIA OR ITS OFFICERS OR AGENTS SHALL NOT BE RESPONSIBLE FOR THE ACCURACY OR COMPLETENESS OF SCANNED COPIES OF THIS PLAN SHEET.

STATE OF CALIFORNIA
DEPARTMENT OF TRANSPORTATION

PAVEMENT MARKINGS ARROWS

NO SCALE

2010 STANDARD PLAN A24A

A24A

11-3-08

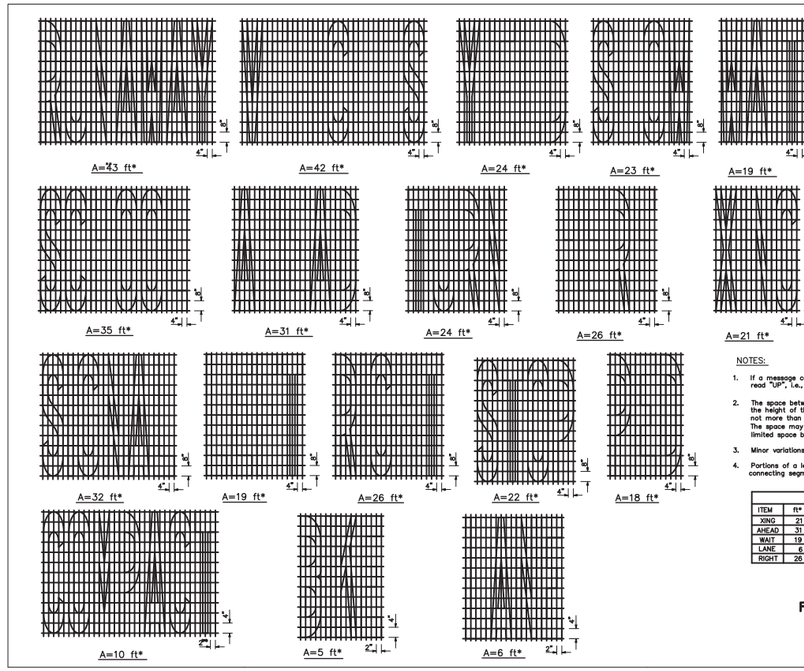

NOTES:

1. If a message consists of more than one word, it should read "UP", i.e., the first word should be nearest the driver.
2. The space between words should be at least four times the height of the characters for low speed roads, but not more than ten times the height of the characters. The space may be reduced appropriately where there is limited space because of local conditions.
3. Minor variations in dimensions may be accepted by the Engineer.
4. Portions of a letter, number or symbol may be separated by connecting segments not to exceed 2" in width.

WORD MARKINGS

ITEM	ft*	ITEM	ft*	ITEM	ft*	ITEM	ft*
XING	21	YIELD	24	BIKE	5	PED	18
AHEAD	31	SCHOOL	35	SLOW	23	COMPACT	10
WAIT	19	SIGNAL	32	STOP	22	RUNAWAY	43
LANE	6	TURN	24	LEFT	19	VEHICLES	42
RIGHT	26	HERE	26				

THE STATE OF CALIFORNIA OR ITS OFFICERS OR AGENTS SHALL NOT BE RESPONSIBLE FOR THE ACCURACY OR COMPLETENESS OF SCANNED COPIES OF THIS PLAN SHEET.

STATE OF CALIFORNIA
DEPARTMENT OF TRANSPORTATION

PAVEMENT MARKINGS WORDS

NO SCALE

2010 STANDARD PLAN A24D

A24D

11-3-08

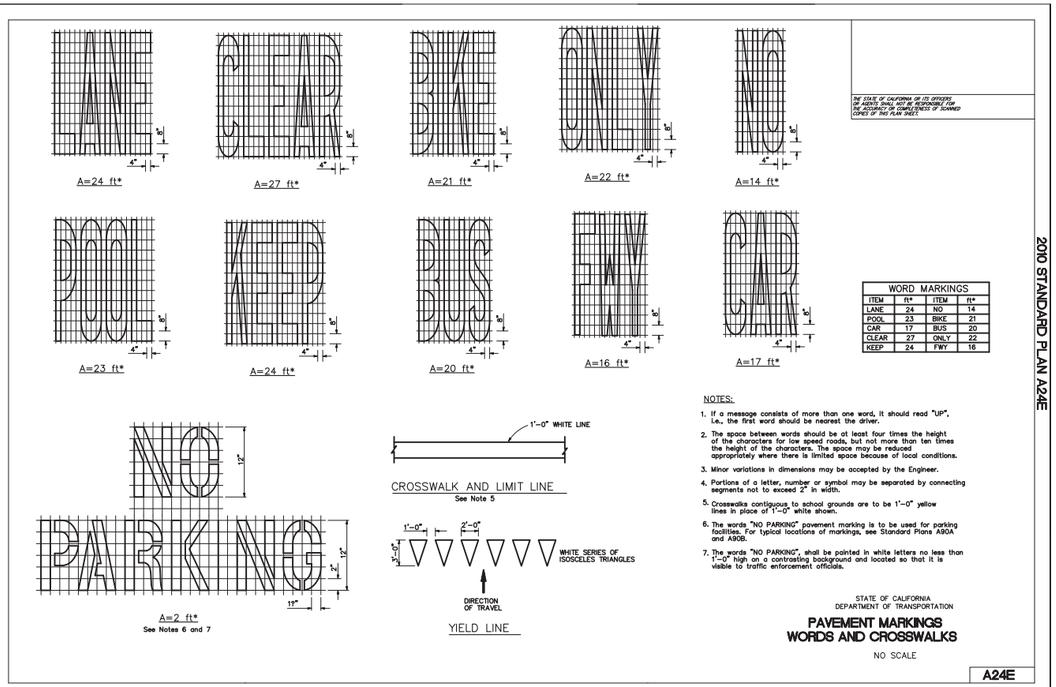

WORD MARKINGS

ITEM	ft*	ITEM	ft*
LANE	24	NO	14
POOL	23	BIKE	21
CAR	17	BUS	20
CLEAR	27	ONLY	22
KEEP	24	FWY	16

NOTES:

1. If a message consists of more than one word, it should read "UP", i.e., the first word should be nearest the driver.
2. The space between words should be at least four times the height of the characters for low speed roads, but not more than ten times the height of the characters. The space may be reduced appropriately where there is limited space because of local conditions.
3. Minor variations in dimensions may be accepted by the Engineer.
4. Portions of a letter, number or symbol may be separated by connecting segments not to exceed 2" in width.
5. Crosswalks contiguous to school grounds are to be 1'-0" yellow lines in place of 1'-0" white shown.
6. The words "NO PARKING" pavement marking is to be used for parking facilities. For typical locations of markings, see Standard Plans A90A and A90B.
7. The words "NO PARKING", shall be painted in white letters no less than 1'-0" high on a contrasting background and located so that it is visible to traffic enforcement officials.

THE STATE OF CALIFORNIA OR ITS OFFICERS OR AGENTS SHALL NOT BE RESPONSIBLE FOR THE ACCURACY OR COMPLETENESS OF SCANNED COPIES OF THIS PLAN SHEET.

STATE OF CALIFORNIA
DEPARTMENT OF TRANSPORTATION

PAVEMENT MARKINGS WORDS AND CROSSWALKS

NO SCALE

2010 STANDARD PLAN A24E

A24E

11-3-08

SCALE: NO SCALE

REV. NO.	DATE	DRWN	CHKD	REMARKS

DESIGNED BY: RDH
DRAWN BY: RDH
CHECKED BY: DAD
DATE: APRIL 2012

CDM Smith
2295 Gateway Oaks Drive, Suite 240
Sacramento, CA 95833
Tel: (916) 567-9900

0 1/2 1
IF THIS BAR DOES NOT MEASURE 1" THEN ADJUST SCALE ACCORDINGLY

REGISTERED PROFESSIONAL ENGINEER
DONALD A. DRUSE
No.44519
CIVIL
STATE OF CALIFORNIA

RICK ENGINEERING COMPANY
711 TRUE FUEL BLVD. SUITE 110
SAN LUIS OBISPO, CA 93401
805.543.2707
FAX (805) 511-2073
Civil Design · Surveying · Land Development
Mobile Design · Water · Wastewater
Facilities Planning · Construction Management
www.rickengineering.com

DIGALERT
DIAL TOLL FREE
1-800-642-2444
AT LEAST TWO DAYS BEFORE YOU DIG
UNDERGROUND SERVICE ALERT OF NORTHERN CALIFORNIA

LOS OSOS WASTEWATER COLLECTION SYSTEM

AREA B TRAFFIC CONTROL PLAN
DETAIL SHEETS
PAVEMENT MARKINGS, ARROWS AND WORDS

PROJECT NO.42502-83120
FILE NAME: B-TC-03

SHEET NO.
B-TC-003

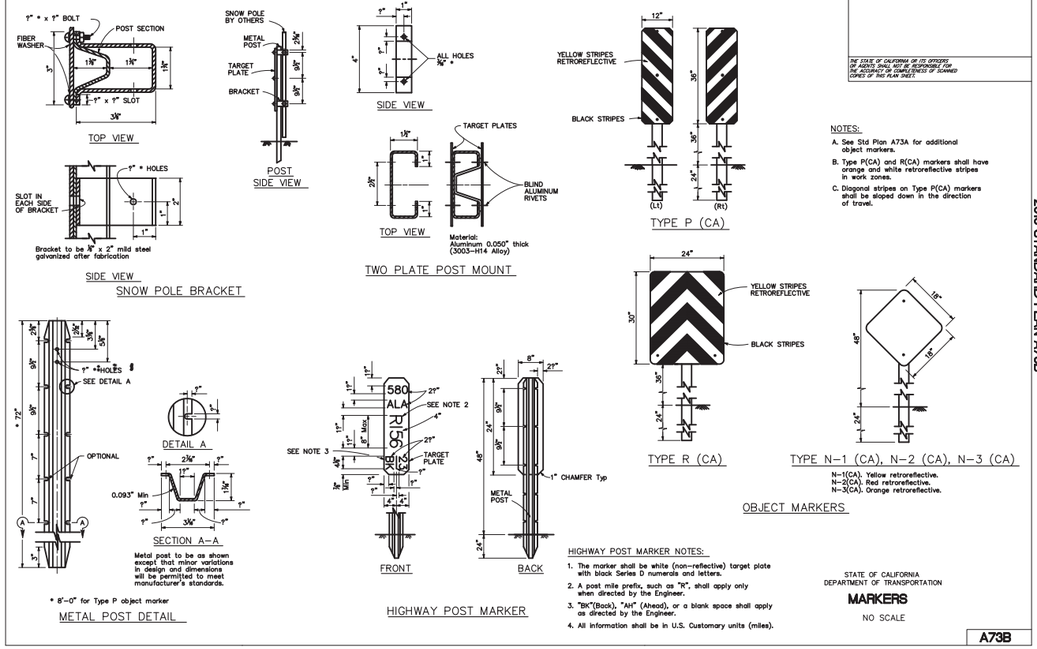

NOTES:

A. See Std Plan A73A for additional object markers.

B. Type P(CA) and R(CA) markers shall have orange and white retroreflective stripes in work zones.

C. Diagonal stripes on Type P(CA) markers shall be sloped down in the direction of travel.

HIGHWAY POST MARKER NOTES:

1. The marker shall be white (non-reflective) target plate with black Series D numerals and letters.
2. A post mile prefix, such as "N", shall apply only when directed by the Engineer.
3. "BK"(Back), "AH" (Ahead), or a blank space shall apply as directed by the Engineer.
4. All information shall be in U.S. Customary units (miles).

THE STATE OF CALIFORNIA OR ITS OFFICERS OR AGENTS SHALL NOT BE RESPONSIBLE FOR THE ACCURACY OR COMPLETENESS OF SCANNED COPIES OF THIS PLAN SHEET.

STATE OF CALIFORNIA
DEPARTMENT OF TRANSPORTATION

MARKERS

NO SCALE

2010 STANDARD PLAN A73B

A73B

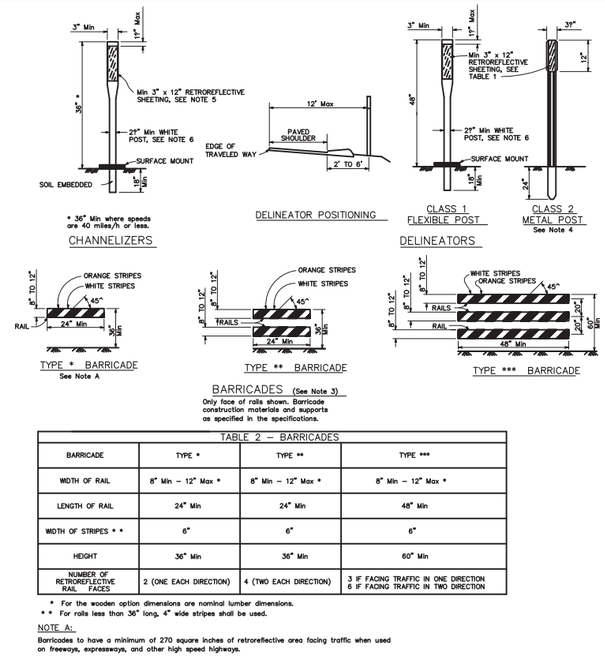

TABLE 2 – BARRICADES

BARRICADE	TYPE *	TYPE **	TYPE ***
WIDTH OF RAIL	8" Min – 12" Max *	8" Min – 12" Max *	8" Min – 12" Max *
LENGTH OF RAIL	24" Min	24" Min	48" Min
WIDTH OF STRIPES * *	6"	6"	6"
HEIGHT	36" Min	36" Min	60" Min
NUMBER OF RETROREFLECTIVE RAIL FACES	2 (ONE EACH DIRECTION)	4 (TWO EACH DIRECTION)	3 IF FACING TRAFFIC IN ONE DIRECTION 6 IF FACING TRAFFIC IN TWO DIRECTION

* For the wooden option dimensions are nominal lumber dimensions.
* * For rails less than 36" long, 4" wide stripes shall be used.

NOTE A:
Barricades to have a minimum of 270 square inches of retroreflective area facing traffic when used on freeways, expressways, and other high speed highways.

TABLE 1 – DELINEATORS

TYPE	RETROREFLECTIVE SHEETING	
	FRONT	BACK
E	WHITE	WHITE (SEE NOTE 1)
F	WHITE	NONE
G	YELLOW	NONE
I	YELLOW	YELLOW (SEE NOTE 1)
J	RED	NONE

NOTES:

1. The retroreflective sheeting used on the back of delineator shall be a minimum size of 3" x 3".
2. The type of delineator to be installed will be designated on the plans.
3. All barricade stripes shall be retroreflective and sloped downward in the direction of the opened traffic lane.
4. See Standard Plan A73B for Metal Post Details.
5. Unless shown otherwise on the plans, or as directed by the Engineer, the color of the retroreflective sheeting for permanent channelizers shall conform to the color of the pavement markings it supplements.
6. Except, Class 1 (Flexible Post) temporary delineators and temporary channelizers in work zones shall be orange post with white retroreflective sheeting.

THE STATE OF CALIFORNIA OR ITS OFFICERS OR AGENTS SHALL NOT BE RESPONSIBLE FOR THE ACCURACY OR COMPLETENESS OF SCANNED COPIES OF THIS PLAN SHEET.

STATE OF CALIFORNIA
DEPARTMENT OF TRANSPORTATION

DELINEATORS, CHANNELIZERS AND BARRICADES

NO SCALE

2010 STANDARD PLAN A73C

A73C

REV. NO.	DATE	DRWN	CHKD	REMARKS

DESIGNED BY: RDH
DRAWN BY: RDH
CHECKED BY: DAD
DATE: APRIL 2012

CDM Smith
2295 Gateway Oaks Drive, Suite 240
Sacramento, CA 95833
Tel: (916) 567-9900

0 1/2 1
IF THIS BAR DOES NOT MEASURE 1" THEN ADJUST SCALE ACCORDINGLY

REGISTERED PROFESSIONAL ENGINEER DONALD A. DRIGGS No.44519 CIVIL STATE OF CALIFORNIA

RICK CONSTRUCTION COMPANY
711 TRUCK ROUTE ROUTE 110
SAN LUIS OBISPO, CA 93401
805.544.0231
FAX 805.541.2053
For Drain Repairing Underground
Analysis Chemical Plumbing Repairing 2008

DIGALERT
DIAL TOLL FREE
1-800-642-2444
AT LEAST TWO DAYS BEFORE YOU DIG
UNDERGROUND SERVICE ALERT OF NORTHERN CALIFORNIA

LOS OSOS WASTEWATER COLLECTION SYSTEM

AREA B TRAFFIC CONTROL PLAN
DETAIL SHEETS
DELINEATORS, CHANNELIZERS AND BARRICADES

SCALE: NO SCALE
PROJECT NO.42502-83120
FILE NAME: B-TC-04
SHEET NO.
B-TC-004

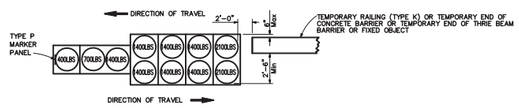

ARRAY 'TB11'

Approach speed less than 45 mph

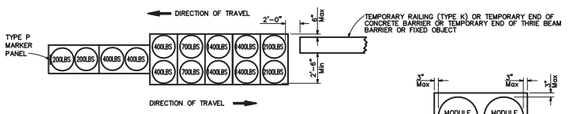

ARRAY 'TB14'

Approach speed 45 mph or more

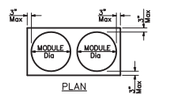

PLAN

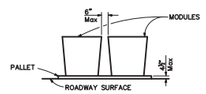

ELEVATION

CRASH CUSHION PALLET DETAIL

See Note 7

NOTES:

1. (XXX) Indicates sand filled module location and weight of sand in pounds for each module. Module spacing is based on the greater diameter of the module.
2. All sand weights are nominal.
3. Temporary crash cushion arrays shall not encroach on the traveled way.
4. Place the Type P marker panel so that the bottom of the panel rests upon the pallet.
5. Refer to Standard Plan A73B for marker details.
6. Approach speeds indicated conform to NCHRP 350 Report criteria.
7. Use of pallets is optional.

STATE OF CALIFORNIA
DEPARTMENT OF TRANSPORTATION

TEMPORARY CRASH CUSHION, SAND FILLED (BIDIRECTIONAL)

NO SCALE

T1B

THE STATE OF CALIFORNIA OR ITS OFFICERS OR AGENTS SHALL NOT BE RESPONSIBLE FOR THE ACCURACY OR COMPLETENESS OF SCANNED COPIES OF THIS PLAN SHEET.

2010 STANDARD PLAN T1B

231

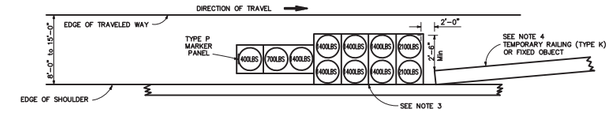

ARRAY 'TS11'

Approach speed less than 45 mph
See Note 9

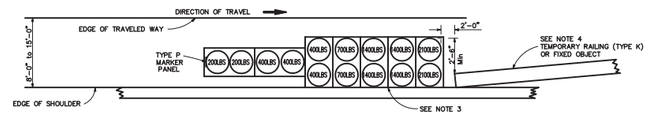

ARRAY 'TS14'

Approach speed 45 mph or more
See Note 9

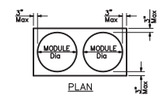

PLAN

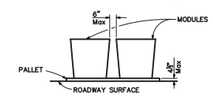

ELEVATION

CRASH CUSHION PALLET DETAIL

See Note 11

NOTES:

1. (XXX) Indicates sand filled module location and weight of sand in pounds for each module. Module spacing is based on the greater diameter of the module.
2. All sand weights are nominal.
3. The temporary crash cushion arrays shown on this plan shall be used only in locations where there will be traffic on one side of the temporary crash cushion array.
4. If the fixed object or approach end of the temporary railing is less than 15'-0" from the edge of traveled way, a temporary crash cushion is required in a construction or work zone.
5. Temporary crash cushion arrays shall not encroach on the traveled way.
6. Arrays for median shoulders shall conform to details shown on this plan for outside shoulders.
7. Place the Type P marker panel so that the bottom of the panel rests upon the pallet and faces traffic.
8. Refer to Standard Plan A73B for marker details.
9. For shoulder widths less than 8'-0", appropriate approved crash cushion protection, other than sand filled modules, shall be provided at fixed objects and at approach ends of temporary railing. The specific type of crash cushion shall be as shown on the project plans or as specified in the Special Provisions, or if not shown on the project plans or specified in the Special Provisions, shall be as approved by the Engineer.
10. Approach speeds indicated conform to NCHRP 350 Report criteria.
11. Use of pallets is optional.

STATE OF CALIFORNIA
DEPARTMENT OF TRANSPORTATION

TEMPORARY CRASH CUSHION, SAND FILLED (SHOULDER INSTALLATIONS)

NO SCALE

T2

THE STATE OF CALIFORNIA OR ITS OFFICERS OR AGENTS SHALL NOT BE RESPONSIBLE FOR THE ACCURACY OR COMPLETENESS OF SCANNED COPIES OF THIS PLAN SHEET.

2010 STANDARD PLAN T2

232

REV. NO.	DATE	DRWN	CHKD	REMARKS

DESIGNED BY: RDH
DRAWN BY: RDH
CHECKED BY: DAD
DATE: APRIL 2012

CDM Smith
2295 Gateway Oaks Drive, Suite 240
Sacramento, CA 95833
Tel: (916) 567-9900

0 1/2 1
IF THIS BAR DOES NOT MEASURE 1" THEN ADJUST SCALE ACCORDINGLY

REGISTERED PROFESSIONAL ENGINEER DONALD A. DRUSE No.44519 CIVIL STATE OF CALIFORNIA

RICK CONSTRUCTION COMPANY
711 TRUCK ROUTE 1 BUILD - SUITE 110
SAN LUIS OBISPO, CA 93401
(805) 546-0231
FAX (805) 541-2053
For Dispatch Scheduling Information
Available Over Phone, Fax, Internet
Rcco@rickconstruction.com

DIGALERT
DIAL TOLL FREE
1-800-642-2444
AT LEAST TWO DAYS BEFORE YOU DIG
UNDERGROUND SERVICE ALERT OF NORTHERN CALIFORNIA

LOS OSOS WASTEWATER COLLECTION SYSTEM

AREA B TRAFFIC CONTROL PLAN
DETAIL SHEETS
CRASH CUSHIONS

SCALE: NO SCALE
PROJECT NO.42502-83120
FILE NAME: B-TC-05
SHEET NO.
B-TC-005

233

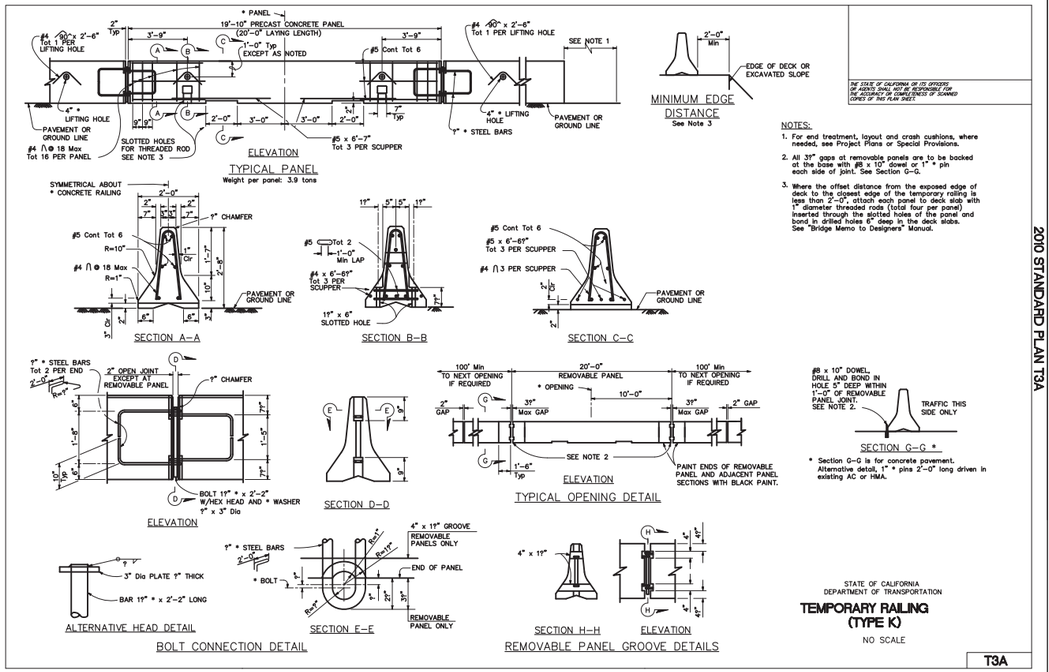

THE STATE OF CALIFORNIA OR ITS OFFICERS OR AGENTS SHALL NOT BE RESPONSIBLE FOR THE ACCURACY OR COMPLENESS OF SCANNED COPIES OF THIS PLAN SHEET.

NOTES:

1. For end treatment, layout and crash cushions, where needed, see Project Plans or Special Provisions.
2. All 37" gaps at removable panels are to be backed at the base with #8 x 10" dowel or 1" * pin each side of joint. See Section G-G.
3. Where the offset distance from the exposed edge of deck to the closest edge of the temporary railing is less than 2'-0", attach each panel to deck slab with 1" diameter threaded rods (total four per panel) inserted through the slotted holes of the panel and bond in drilled holes 6" deep in the deck slabs. See "Bridge Memo to Designers" Manual.

2010 STANDARD PLAN T3A

STATE OF CALIFORNIA
DEPARTMENT OF TRANSPORTATION

TEMPORARY RAILING (TYPE K)

NO SCALE

T3A

8-31-10

234

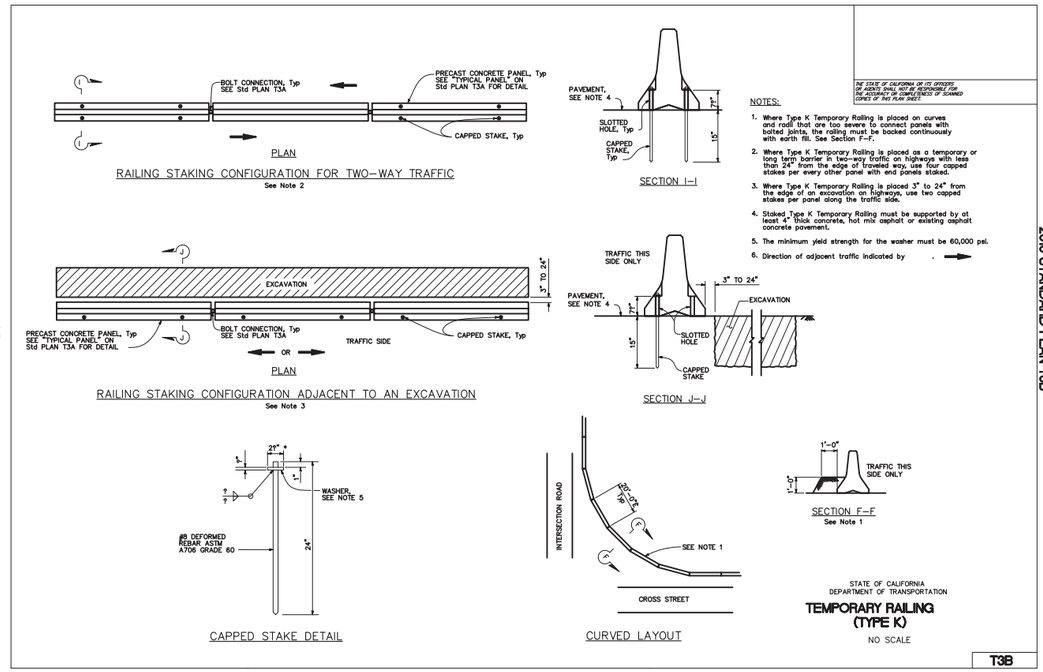

NOTES:

1. Where Type K Temporary Railing is placed on curves and radii that are too severe to connect panels with bolted joints, the railing must be backed continuously with earth fill. See Section F-F.
2. Where Type K Temporary Railing is placed as a temporary or long term barrier in two-way traffic on highways with less than 24" from the edge of traveled way, use four capped stakes per every other panel with end panels staked.
3. Where Type K Temporary Railing is placed 3" to 24" from the edge of an excavation on highways, use two capped stakes per panel along the traffic side.
4. Staked Type K Temporary Railing must be supported by at least 4" thick concrete, hot mix asphalt or existing asphalt concrete pavement.
5. The minimum yield strength for the washer must be 60,000 psi.
6. Direction of adjacent traffic indicated by .

THE STATE OF CALIFORNIA OR ITS OFFICERS OR AGENTS SHALL NOT BE RESPONSIBLE FOR THE ACCURACY OR COMPLENESS OF SCANNED COPIES OF THIS PLAN SHEET.

2010 STANDARD PLAN T3B

STATE OF CALIFORNIA
DEPARTMENT OF TRANSPORTATION

TEMPORARY RAILING (TYPE K)

NO SCALE

T3B

7-8-10

235

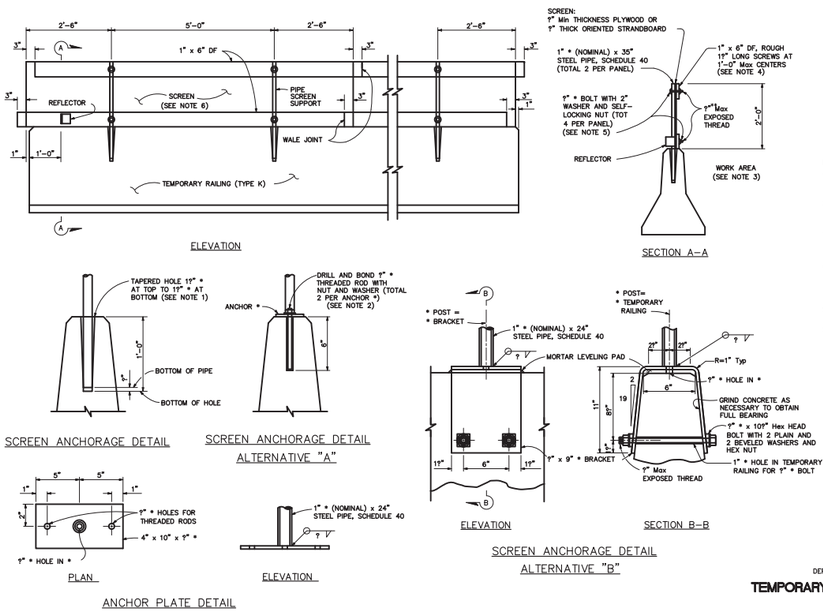

NOTES:

1. Straight holes 17" * of the depth shown may be used in lieu of the tapered holes.
2. Resin capsule-type anchorage devices may be substituted for threaded rods.
3. Place screen on work area side of the temporary railing where traffic will only be on one side of the temporary railing.
4. Clinched 8d box nails may be substituted for screws. The nails shall be clinched on the work area side of the screen where traffic will only be on one side of the temporary railing.
5. U-bolts may be substituted for 7" * bolts.
6. Openings in the screen of 3'-0" length shall be provided at 200' intervals.

THE STATE OF CALIFORNIA OR ITS OFFICERS OR AGENTS SHALL NOT BE RESPONSIBLE FOR THE ACCURACY OR COMPLENESS OF SCANNED COPIES OF THIS PLAN SHEET.

2010 STANDARD PLAN T4

STATE OF CALIFORNIA
DEPARTMENT OF TRANSPORTATION

TEMPORARY TRAFFIC SCREEN

NO SCALE

T4

10-8-08

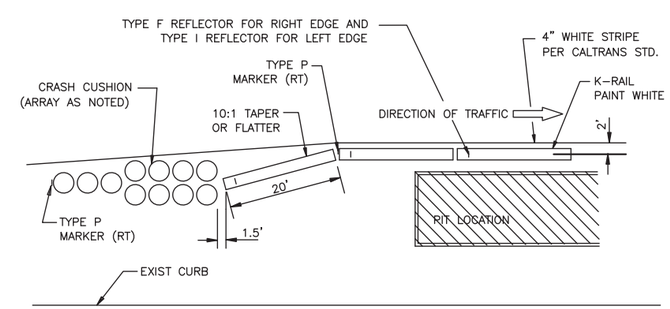

TYPICAL INSTALLATION OF CRASH CUSHIONS AND K-RAIL – TAPER 10:1 OR FLATTER

NO SCALE

SCALE: NO SCALE

REV. NO.	DATE	DRWN	CHKD	REMARKS

DESIGNED BY: RDH
DRAWN BY: RDH
CHECKED BY: DAD
DATE: APRIL 2012

CDM Smith
2295 Gateway Oaks Drive, Suite 240
Sacramento, CA 95833
Tel: (916) 567-9900

0 1/2 1
IF THIS BAR DOES NOT MEASURE 1" THEN ADJUST SCALE ACCORDINGLY

REGISTERED PROFESSIONAL ENGINEER DONALD A. DRUSE No.44519 CIVIL STATE OF CALIFORNIA

RICK ENGINEERING COMPANY
711 TOLL RUN BLVD., SUITE 110
SAN LUIS OBISPO, CA 93401
805.541.2707
FAX 805.781.2083
Civil Design · Remodeling · Multifamily
Subdivision · Condos · Mixed Use · Tenant Improvements
www.rickengineering.com

DIGALERT
DIAL TOLL FREE
1-800-642-2444
AT LEAST TWO DAYS BEFORE YOU DIG
UNDERGROUND SERVICE ALERT OF NORTHERN CALIFORNIA

LOS OSOS WASTEWATER COLLECTION SYSTEM

AREA B TRAFFIC CONTROL PLAN
DETAIL SHEETS
TEMPORARY RAILING (TYPE K)

PROJECT NO.42502-83120
FILE NAME: B-TC-06

SHEET NO.
B-TC-006

239

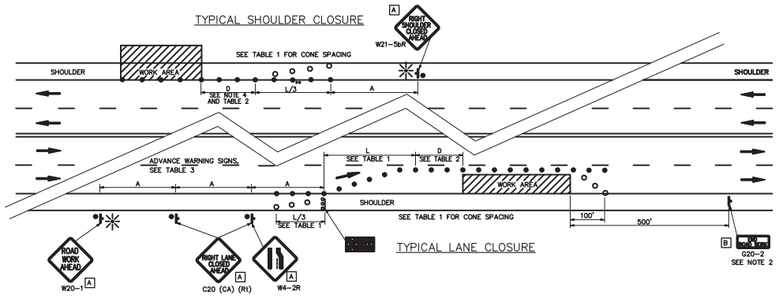

TABLE 1

APPROACH SPEED	* Min L	* Min L/3	Max SPACING OF CONES
mph	ft	ft	ft
20 AND BELOW	80	30	20
25	125	45	25
30	180	60	30
35	245	85	35
40	320	110	40
45	540	180	45
50	600	200	50
OVER 50	SEE NOTE 3		

* USE L FOR LANE WIDTHS LESS THAN OR EQUAL TO 12'.

TABLE 2

APPROACH SPEED	Min D	DOWNGRADE Min D *		
		-3%	-6%	-9%
mph	ft	ft	ft	ft
25 AND BELOW	155	158	165	173
30	200	205	215	227
35	250	257	271	287
40	305	315	333	354
45	360	378	400	427
50	425	446	474	507
OVER 50	SEE NOTE 3			

* USE ON SUSTAINED DOWNGRADE STEEPER THAN -3 PERCENT AND LONGER THAN 1 MILE.

TABLE 3

DISTANCE BETWEEN SIGNS	
ROAD TYPE	Min A (ft)
URBAN (SPEED 25 mph OR LESS)	100
URBAN (SPEED 30 mph OR MORE)	350
RURAL	500
EXPRESSWAY / FREEWAY	SEE NOTE 3

LEGEND

- TRAFFIC CONE
- TRAFFIC CONE (OPTIONAL TAPER)
- TEMPORARY SIGN
- DIRECTION OF TRAVEL
- FLASHING ARROW SIGN (FAS)
- FAS SUPPORT OR TRAILER
- PORTABLE FLASHING BEACON

SIGN PANEL SIZE (Min)

- A 36" x 36"
- B 36" x 18"

NOTES:

1. California code are designated by (CA). Otherwise, Federal (MUTCD) codes are shown.
2. A G20-2 "END ROAD WORK" sign, as appropriate, shall be placed at the end of the lane closure unless the end of work area is obvious, or ends within a larger project's limits.
3. For approach speeds over 50 mph, use the "Traffic Control System for Lane Closure On Freeways And Expressways" plan for lane closure details and requirements.
4. D is longitudinal buffer space and is optional only when work area is beyond the shoulder or clear recovery zone where there is no shoulder.

STATE OF CALIFORNIA
DEPARTMENT OF TRANSPORTATION

TRAFFIC CONTROL SYSTEM FOR LANE CLOSURE ON MULTILANE CONVENTIONAL HIGHWAYS

NO SCALE

T11

2010 STANDARD PLAN T11

THE STATE OF CALIFORNIA OR ITS OFFICERS OR AGENTS SHALL NOT BE RESPONSIBLE FOR THE ACCURACY OR COMPLETENESS OF SCANNED COPIES OF THIS PLAN SHEET.

240

TABLE 1

APPROACH SPEED	* Min L	* Min L/2	Max SPACING OF CONES
mph	ft	ft	ft
20 AND BELOW	80	40	10
25	125	65	12
30	180	90	15
35	245	125	17
40	320	160	20
45	540	270	22
50	600	300	25
55	660	330	27
60	720	360	30
65	780	390	32

* USE L FOR LANE WIDTHS LESS THAN OR EQUAL TO 12'.

TABLE 2

APPROACH SPEED	Min D	DOWNGRADE Min D *		
		-3%	-6%	-9%
mph	ft	ft	ft	ft
25 AND BELOW	155	158	165	173
30	200	205	215	227
35	250	257	271	287
40	305	315	333	354
45	360	378	400	427
50	425	446	474	507
55	495	520	553	593
60	570	598	638	686
65	645	682	728	785

* USE ON SUSTAINED DOWNGRADE STEEPER THAN -3 PERCENT AND LONGER THAN 1 MILE.

TABLE 3

DISTANCE BETWEEN SIGNS			
ROAD TYPE	Min A (ft)	Min B (ft)	Min C (ft)
URBAN (SPEED 25 mph OR LESS)	100	100	100
URBAN (SPEED 30 mph OR MORE)	350	350	350
RURAL	500	500	500
EXPRESSWAY / FREEWAY	1000	1500	2640

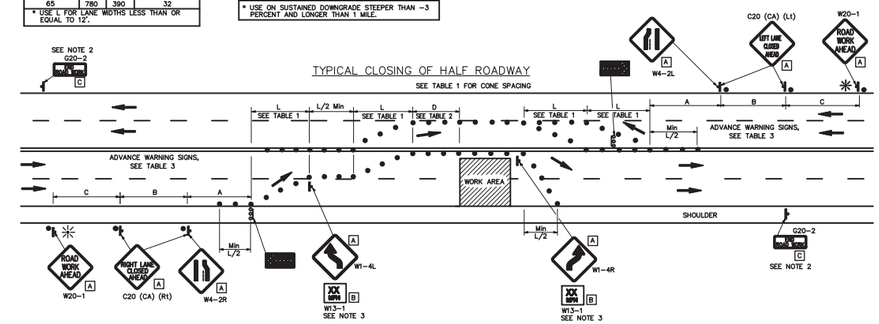

LEGEND

- TRAFFIC CONE
- TEMPORARY SIGN
- DIRECTION OF TRAVEL
- FLASHING ARROW SIGN (FAS)
- FAS SUPPORT OR TRAILER
- PORTABLE FLASHING BEACON

SIGN PANEL SIZE (Min)

- A 48" x 48" – SPEED OF 45 mph OR MORE; 36" x 36" – SPEED LESS THAN 45 mph
- B 30" x 30" – SPEED OF 45 mph OR MORE; 24" x 24" – SPEED LESS THAN 45 mph
- C 48" x 24" – SPEED OF 45 mph OR MORE; 36" x 18" – SPEED LESS THAN 45 mph

NOTES:

1. California code are designated by (CA). Otherwise, Federal (MUTCD) codes are shown.
2. A G20-2 "END ROAD WORK" sign, as appropriate, shall be placed at the end of the lane closure unless the end of work area is obvious, or ends within a larger project's limits.
3. Advisory speed will be determined by the Engineer. The W13-1 Sign will not be required when advisory speed is more than the posted or maximum speed limit.

STATE OF CALIFORNIA
DEPARTMENT OF TRANSPORTATION

TRAFFIC CONTROL SYSTEM FOR HALF ROAD CLOSURE ON MULTILANE CONVENTIONAL HIGHWAYS AND EXPRESSWAYS

NO SCALE

T12

2010 STANDARD PLAN T12

THE STATE OF CALIFORNIA OR ITS OFFICERS OR AGENTS SHALL NOT BE RESPONSIBLE FOR THE ACCURACY OR COMPLETENESS OF SCANNED COPIES OF THIS PLAN SHEET.

241

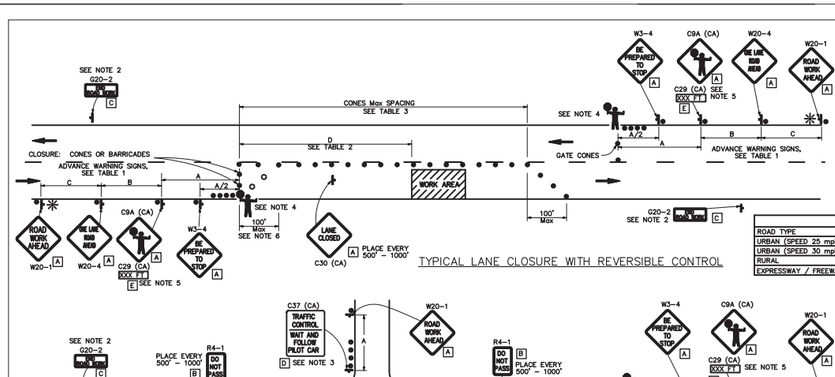

TABLE 1

DISTANCE BETWEEN SIGNS			
ROAD TYPE	Min A (ft)	Min B (ft)	Min C (ft)
URBAN (SPEED 25 mph OR LESS)	100	100	100
URBAN (SPEED 30 mph OR MORE)	350	350	350
RURAL	500	500	500
EXPRESSWAY / FREEWAY	1000	1500	2640

TABLE 2

APPROACH SPEED	Min D	DOWNGRADE Min D *		
		-3%	-6%	-9%
mph	ft	ft	ft	ft
25 AND BELOW	155	158	165	173
30	200	205	215	227
35	250	257	271	287
40	305	315	333	354
45	360	378	400	427
50	425	446	474	507
55	495	520	553	593
60	570	598	638	686
65	645	682	728	785

* USE ON SUSTAINED DOWNGRADE STEEPER THAN -3 PERCENT AND LONGER THAN 1 MILE.

TABLE 3

CONES Max SPACING	
POSTED SPEED	ft
20 mph	20
25 mph	25
30 mph	30
35 mph	35
40 mph	40
45 mph	45
50 mph	50
55 mph	55
60 mph	60
65 mph	65

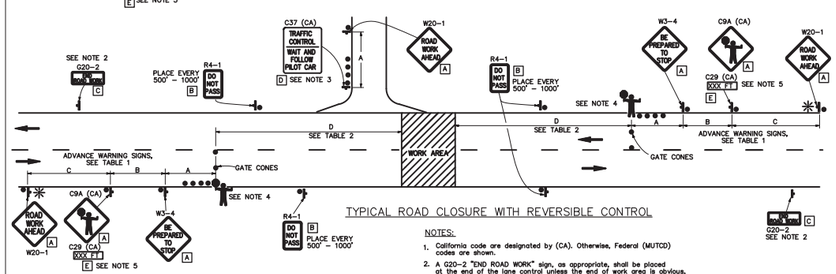

LEGEND

- TRAFFIC CONE
- TRAFFIC CONE (OPTIONAL TAPER)
- TEMPORARY SIGN
- DIRECTION OF TRAVEL
- PORTABLE FLASHING BEACON
- FLAGGER

SIGN PANEL SIZE (MINIMUM)

- A 48" x 48" – SPEED OF 45 mph OR MORE; 36" x 36" – SPEED LESS THAN 45 mph
- B 48" x 36" – SPEED OF 45 mph OR MORE; 30" x 24" – SPEED LESS THAN 45 mph
- C 48" x 24" – SPEED OF 45 mph OR MORE; 36" x 18" – SPEED LESS THAN 45 mph
- D 36" x 42"
- E 36" x 9"

NOTES:

1. California code are designated by (CA). Otherwise, Federal (MUTCD) codes are shown.
2. A G20-2 "END ROAD WORK" sign, as appropriate, shall be placed at the end of the lane control unless the end of work area is obvious, or ends within a larger project's limits.
3. When a pilot car is used, place a C37 (CA) sign at all intersections within traffic control area. Where vehicular traffic can not effectively self-regulate, at least one flagger shall be used at each intersections within traffic control area.
4. Flagger should stand in a conspicuous place, facing traffic at all times, be visible to approaching traffic as well as approaching vehicles after the first vehicle has stopped. Engineer will determine if additional advance flaggers is required.
5. When flagger is not visible from this location place a C29 (CA) sign below the C9A (CA) sign.
6. Traffic cones or barricades may be placed on the optional taper as shown, barricades shall be Type *, **, or ***.

STATE OF CALIFORNIA
DEPARTMENT OF TRANSPORTATION

TRAFFIC CONTROL SYSTEM FOR LANE CLOSURE ON TWO LANE CONVENTIONAL HIGHWAYS

NO SCALE

T13

2010 STANDARD PLAN T13

THE STATE OF CALIFORNIA OR ITS OFFICERS OR AGENTS SHALL NOT BE RESPONSIBLE FOR THE ACCURACY OR COMPLETENESS OF SCANNED COPIES OF THIS PLAN SHEET.

SCALE: NO SCALE

REV. NO.	DATE	DRWN	CHKD	REMARKS

DESIGNED BY: RDH
DRAWN BY: RDH
CHECKED BY: DAD
DATE: APRIL 2012

CDM Smith
2295 Gateway Oaks Drive, Suite 240
Sacramento, CA 95833
Tel: (916) 567-9900

IF THIS BAR DOES NOT MEASURE 1" THEN ADJUST SCALE ACCORDINGLY

REGISTERED PROFESSIONAL ENGINEER — DONALD A. DRUSE — No.44519 CIVIL — STATE OF CALIFORNIA

RICK ENGINEERING COMPANY

DIGALERT — DIAL TOLL FREE 1-800-642-2444 AT LEAST TWO DAYS BEFORE YOU DIG — UNDERGROUND SERVICE ALERT OF NORTHERN CALIFORNIA

LOS OSOS WASTEWATER COLLECTION SYSTEM

AREA B TRAFFIC CONTROL PLAN DETAIL SHEETS
CALTRANS TRAFFIC CONTROL PLANS

PROJECT NO.42502-83120
FILE NAME: B-TC-07

SHEET NO.
B-TC-007

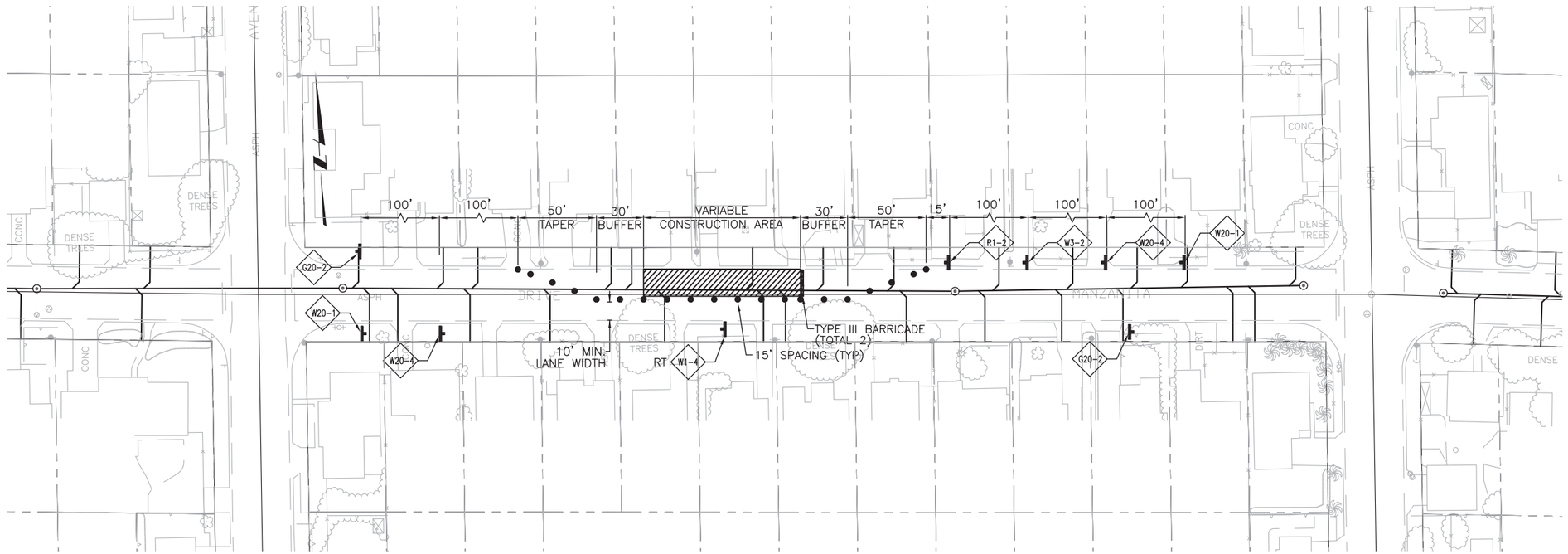

MINOR STREET – TYPICAL MID–BLOCK SINGLE LANE CLOSURE

NOTES:

1. THIS DRAWING SHOWS ONLY ONE STAGE OF TRAFFIC CONTROL. THE CONTRACTOR SHALL INCLUDE THEIR STAGING PLAN IN THEIR OWN TRAFFIC CONTROL PLAN SUBMITTAL. SUBMIT TO THE ENGINEER FOR REVIEW AND ACCEPTANCE.
2. FOR ALL SINGLE LANE CLOSURES ON MINOR STREETS, THE CONTRACTOR SHALL FOLLOW THE REQUIREMENTS OF FIGURE 6H–11 OF THE MUTCD, (2010 CALIFORNIA EDITION), UNLESS FOLLOWING ANY NOTES 3, 4, OR 5 BELOW.
3. IF APPROVED BY THE COUNTY ENGINEER, ON MINOR STREETS WITH VERY LOW TRAFFIC VOLUMES THE CONTRACTOR MAY USE THE TRAFFIC CONTROL MEASURES FOR A SINGLE LANE CLOSURE AS SHOWN IN FIGURE 6H–18 OF THE MUTCD (2010 CALIFORNIA EDITION)
4. AT THE OPTION OF THE CONTRACTOR, ONE–LANE TRAFFIC CONTROL WITH FLAGGERS MAY BE USED IN LIEU OF THIS TRAFFIC CONTROL LAYOUT. FOR TRAFFIC CONTROL WITH FLAGGERS, CONTRACTOR SHALL FOLLOW FIGURE 6H–10(CA) OF THE MUTCD (2010 CALIFORNIA EDITION)
5. WHEN MINOR STREET ROAD CLOSURES ARE ALLOWED, THE CONTRACTOR SHALL FOLLOW ALL REQUIREMENTS OF THE MUTCD (2010 CALIFORNIA EDITION) FOR DETOUR SIGNAGE, INCLUDING 48–HOUR DOORKNOB NOTICING TO AFFECTED RESIDENTS. SUBMIT DETOUR PLANS TO THE ENGINEER FOR REVIEW AND ACCEPTANCE.
6. 10' MINIMUM LANE WIDTH SHALL BE MAINTAINED AT ALL TIMES ON MINOR STREETS WHEN OPEN TO PUBLIC TRAFFIC. LANE WIDTH IS MEASURED FROM THE NEAR EDGE OF CHANNELIZING DEVICES TO THE EDGE OF PAVEMENT OR CURB/AC BERM FLOWLINE.

SCALE: 1"=40'

REV. NO.	DATE	DRWN	CHKD	REMARKS

DESIGNED BY: RDH
DRAWN BY: RDH
CHECKED BY: DAD
DATE: APRIL 2012

CDM Smith
2295 Gateway Oaks Drive, Suite 240
Sacramento, CA 95833
Tel: (916) 567-9900

0 1/2 1
IF THIS BAR DOES NOT MEASURE 1" THEN ADJUST SCALE ACCORDINGLY

REGISTERED PROFESSIONAL ENGINEER
DONALD A. DRUSE
No.44519
CIVIL
STATE OF CALIFORNIA

RICK ENGINEERING COMPANY
3111 Fitzgerald Road, Suite 110
Rancho Cordova, CA 95742
(916) 851-0200
(916) 851-0202
Civil Survey Transportation Landscape Architecture Construction Management Planning
www.rickengineering.com

DIGALERT
DIAL TOLL FREE
1-800-642-2444
AT LEAST TWO DAYS BEFORE YOU DIG
UNDERGROUND SERVICE ALERT OF NORTHERN CALIFORNIA

LOS OSOS WASTEWATER COLLECTION SYSTEM

AREA B TRAFFIC CONTROL PLAN
TYPICAL MINOR STREET
MID–BLOCK CONSTRUCTION

PROJECT NO.42502–83120
FILE NAME: B–TC–08
SHEET NO.
B–TC–008

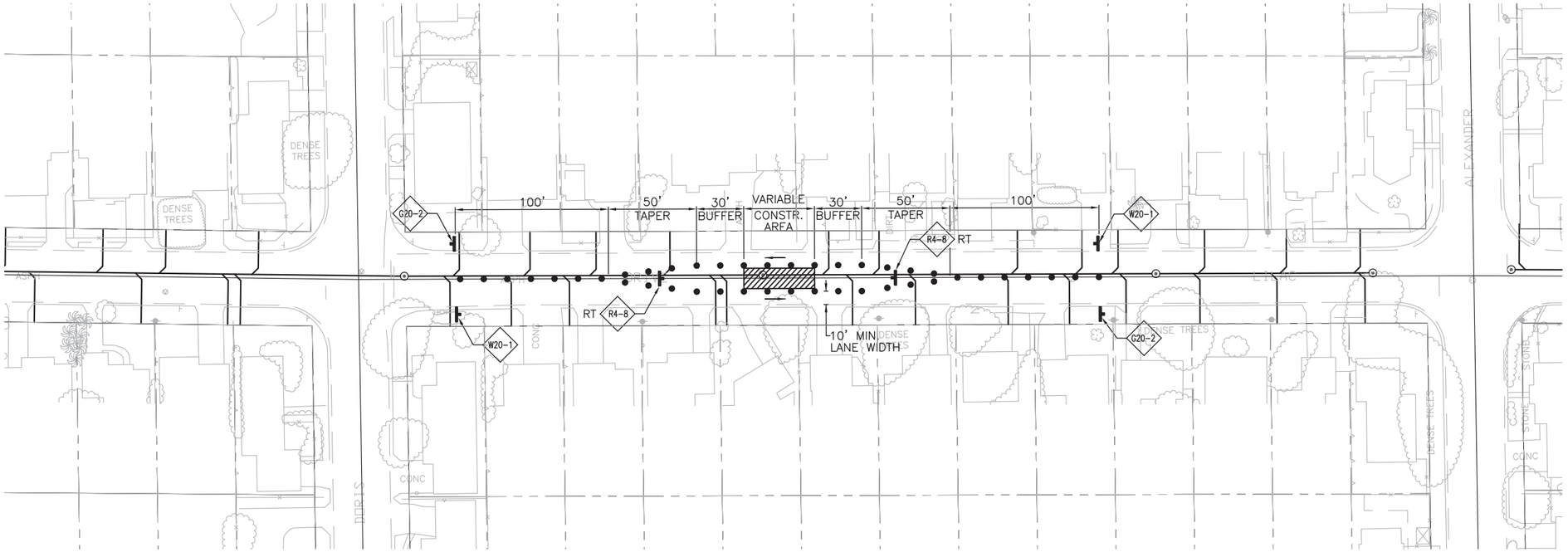

MINOR STREET – TYPICAL ROADWAY CENTER CLOSURE

NOTES:

1. THIS DRAWING SHOWS ONLY ONE STAGE OF TRAFFIC CONTROL. THE CONTRACTOR SHALL INCLUDE THEIR STAGING PLAN IN THEIR OWN TRAFFIC CONTROL PLAN SUBMITTAL. SUBMIT TO THE ENGINEER FOR REVIEW AND ACCEPTANCE.
2. FOR ADDITIONAL NOTES AND REQUIREMENTS RELATED TO TRAFFIC CONTROL FOR WORK IN THE CENTER OF A MINOR STREET, CONTRACTOR SHALL FOLLOW FIGURE 6H–15 OF THE MUTCD (2010 CALIFORNIA EDITION).
3. WHEN MINOR STREET ROAD CLOSURES ARE ALLOWED, THE CONTRACTOR SHALL FOLLOW ALL REQUIREMENTS OF THE MUTCD (2010 CALIFORNIA EDITION) FOR DETOUR SIGNAGE, INCLUDING 48–HOUR DOORKNOB NOTICING TO AFFECTED RESIDENTS. SUBMIT DETOUR PLAN TO THE ENGINEER FOR REVIEW AND ACCEPTANCE.
4. 10' MINIMUM LANE WIDTHS SHALL BE MAINTAINED AT ALL TIMES. LANE WIDTH IS MEASURED FROM THE NEAR EDGE OF CHANNELIZING DEVICES TO THE EDGE OF PAVEMENT OR CURB/AC BERM FLOWLINE.

SCALE: 1"=40'

REV. NO.	DATE	DRWN	CHKD	REMARKS

DESIGNED BY: RDH
DRAWN BY: RDH
CHECKED BY: DAD
DATE: APRIL 2012

CDM Smith
2295 Gateway Oaks Drive, Suite 240
Sacramento, CA 95833
Tel: (916) 567-9900

0 1/2 1
IF THIS BAR DOES NOT MEASURE 1" THEN ADJUST SCALE ACCORDINGLY

REGISTERED PROFESSIONAL ENGINEER
DONALD A. DRUSE
No.44519
CIVIL
STATE OF CALIFORNIA

RICK ENGINEERING COMPANY
711 TOWER ROAD, SUITE 110
SUN CITY CERRO, CA 95601
(909) 677-4018
(916) 387-3100 - 3202
San Diego Sacramento Bakersfield
Riverside Orange County Fresno
RICKENGINEERING.COM

DIGALERT
DIAL TOLL FREE
1-800-642-2444
AT LEAST TWO DAYS BEFORE YOU DIG
UNDERGROUND SERVICE ALERT OF NORTHERN CALIFORNIA

LOS OSOS WASTEWATER COLLECTION SYSTEM

AREA B TRAFFIC CONTROL PLAN
TYPICAL MINOR STREET
MID–BLOCK ROADWAY CENTER CLOSURE

PROJECT NO.42502–83120
FILE NAME: B–TC–09
SHEET NO.
B–TC–009

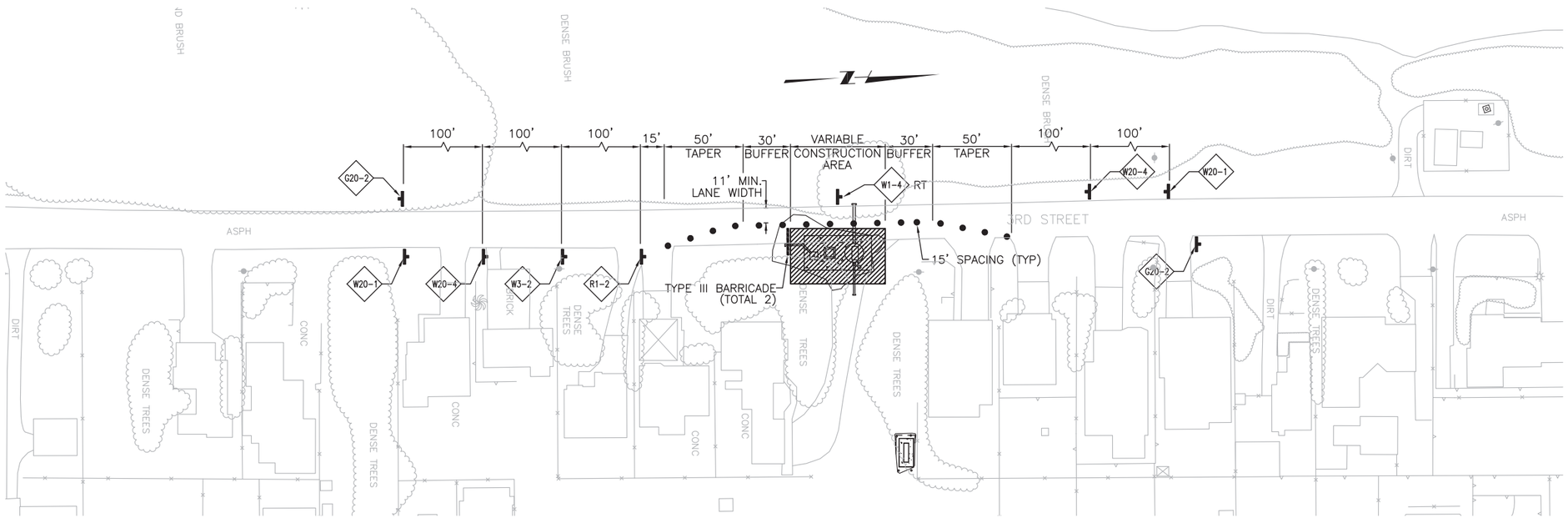

TYPICAL PUMP STATION – SHOULDER AND ROADWAY EDGE WORK

(WEST PASO PUMP STATION, POCKET PUMP STATION 11–A, POCKET PUMP STATION 12–A, POCKET PUMP STATION 13–A)

NOTES:

1. CONTRACTOR TO CHECK THE PROJECT SPECIAL PROVISIONS FOR ADDITIONAL REQUIREMENTS FOR ARTERIAL, COLLECTOR, AND BUSINESS STREET SEGMENTS. THIS PLAN APPLIES ONLY TO SHOULDER AND ROADWAY EDGE WORK ON ROADWAYS CLASSIFIED AS "MINOR STREETS".
2. THIS DRAWING SHOWS ONLY ONE STAGE OF TRAFFIC CONTROL. CONTRACTOR SHALL INCLUDE THEIR STAGING PLAN IN THEIR OWN TRAFFIC CONTROL PLAN SUBMITTAL. SUBMIT TO THE ENGINEER FOR REVIEW AND ACCEPTANCE.
3. WHEN MINOR STREET ROAD CLOSURES ARE ALLOWED, THE CONTRACTOR SHALL FOLLOW ALL REQUIREMENTS OF THE MUTCD (2010 CALIFORNIA EDITION) FOR DETOUR SIGNAGE, INCLUDING 48–HOUR DOORKNOB NOTICING TO AFFECTED RESIDENTS. SUBMIT DETOUR DETOUR PLANS TO THE ENGINEER FOR REVIEW AND ACCEPTANCE.
4. 11' MINIMUM LANE WIDTHS SHALL BE MAINTAINED AT ALL TIMES. LANE WIDTH IS MEASURED FROM THE NEAR EDGE OF CHANNELIZING DEVICES TO THE EDGE OF PAVEMENT OR CURB/AC BERM FLOWLINE.
5. THIS TRAFFIC CONTROL PLAN IS INTENDED ONLY FOR DAYLIGHT AND/OR WORKING HOURS. WHEN OUTSIDE OF CONSTRUCTION HOURS A MINIMUM OF ONE 10' LANE IN EACH DIRECTION SHALL BE OPEN FOR PUBLIC TRAFFIC.

SCALE: 1"=40'

REV. NO.	DATE	DRWN	CHKD	REMARKS

DESIGNED BY: RDH
DRAWN BY: RDH
CHECKED BY: DAD
DATE: APRIL 2012

CDM Smith
2295 Gateway Oaks Drive, Suite 240
Sacramento, CA 95833
Tel: (916) 567-9900

0 1/2 1
IF THIS BAR DOES NOT MEASURE 1" THEN ADJUST SCALE ACCORDINGLY

REGISTERED PROFESSIONAL ENGINEER DONALD A. DRIGGS No.44519 CIVIL STATE OF CALIFORNIA

RICK ENGINEERING COMPANY
711 TRUXTUN BOULD - SUITE 110
SAN LUIS OBISPO, CA 93401
(805) 541-5221
FAX (805) 541-2083
San Diego Bakersfield Sacramento
Modesto Chico Visalia Fresno
Roseville Palm Springs

DIGALERT
DIAL TOLL FREE
1-800-642-2444
AT LEAST TWO DAYS BEFORE YOU DIG
UNDERGROUND SERVICE ALERT OF NORTHERN CALIFORNIA

LOS OSOS WASTEWATER COLLECTION SYSTEM

AREA B TRAFFIC CONTROL PLAN
TYPICAL PUMP STATION
SHOULDER AND ROADWAY EDGE WORK

PROJECT NO.42502–83120
FILE NAME: B–TC–10

SHEET NO.
B–TC–010

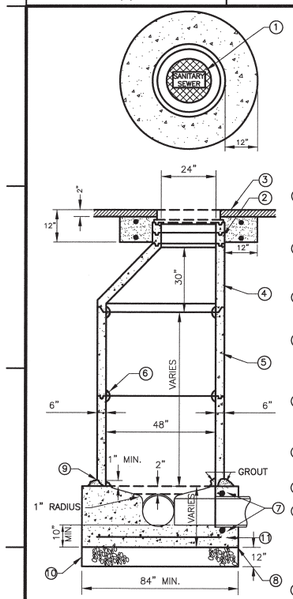

① COVER, MANHOLE FRAMES AND COVER SHALL HAVE A 24" CLEAR OPENING AND A SEALED BLIND PICKHOLE (PINKERTON A–640 OR APPROVED EQUAL). THE COVER SHALL BE LETTERED "SANITARY SEWER". COVER TO BE RATTLE–FREE WITHOUT THE USE OF SEALANT.

② ADJUSTMENT, RINGS SHALL BE 3" OR 6". TOP OF CONE TO TOP OF FRAME SHALL NOT EXCEED 15". GRADE RINGS AND MANHOLE FRAME SHALL BE SEALED AT EVERY JOINT WITH BUTYL RUBBER (CONSEAL CS–102 OR EQUAL) AND GROUTED ON THE INSIDE.

③ CONCRETE COLLAR, COLLAR SHALL BE CLASS B CONCRETE. THE COLLAR SHALL BE ALLOWED TO CURE 48 HOURS PRIOR TO ANY TRAFFIC USE. REINF WITH 2–#4 HOOPS AND #4 VERTS

④ CONE, CONE SHALL BE ECCENTRIC AND CONFORM TO THE REQUIREMENTS FOR RISERS. THE STRAIGHT SIDE OF THE CONE SHALL BE POSITIONED OVER THE MANHOLE OUTLET. CONCENTRIC CONES MAY BE USED ONLY IN SPECIAL CASES WITH THE PRIOR WRITTEN CONSENT OF THE ENGINEER.

⑤ MANHOLE RISERS, MANHOLE RISERS SHALL BE 48" IN DIAMETER, PRECAST CONCRETE CONFORMING TO ASTM C478 FOR PRECAST REINFORCED MANHOLE SECTIONS. MANHOLE RISERS SHALL BE PVC LINED OR EQUAL. LINING SHALL EXTEND TO BASE OF COVER.

⑥ JOINTS, JOINTS SHALL BE SET WITH PREFORMED MASTIC SEALANT (RAMNEK, KENT SEAL, OR EQUAL). INSIDE OF JOINTS SHALL BE GROUTED WITH NON–SHRINK GROUT.

⑦ WATER STOPS, WHEN PVC USED, I.E. ADAPTER RINGS.

⑧ BASE, MANHOLE BASE SHALL BE 10" DEEP MINIMUM. CLASS "E" CONCRETE SHALL BE USED AND SHALL NOT FALL OVER 6 FEET UNLESS AN "ELEPHANTS TRUNK" OR AN "ADJUSTABLE PIPE" IS USED. CONCRETE WORK IN CHANNEL SHALL BE A STEEL TROWEL FINISH AND SHELF AREAS SHALL BE A BROOM FINISH. BASE SHALL BE MONOLITHICALLY PLACED. COAT MANHOLE BENCH WITH POLIBRID EPOXY OR EQUAL.

⑨ BASE, USE STEEL IMPRESSION RING IN WET CONCRETE TO FORM GROOVE FOR FIRST RISER SECTION. SET FIRST RISER SECTION ON PREFORMED MASTIC SEALANT.

⑩ FOUNDATION, PROVIDE 12" OF CLASS 2 AB WRAPPED IN GEOTEXTILE BENEATH MANHOLE BASE.

⑪ MANHOLES 10 FEET AND GREATER IN DEPTH SHALL HAVE MINIMUM #4 AT 12" E.W. REINFORCING.

⑫ TRENCH DAM – INSTALL 6" THICK TRENCH DAM ON OUTLET PIPE. EMBED 6" INTO UNDISTURBED MATERIAL ON BOTTOM AND SIDES, EXTEND TO 12" OVER TOP OF PIPE. TRENCH DAM SHALL BE FLOWABLE FILL, OR TRENCH PLUG MATERIAL, PER SPECIFICATIONS.

STANDARD SEWER MANHOLE — C–100

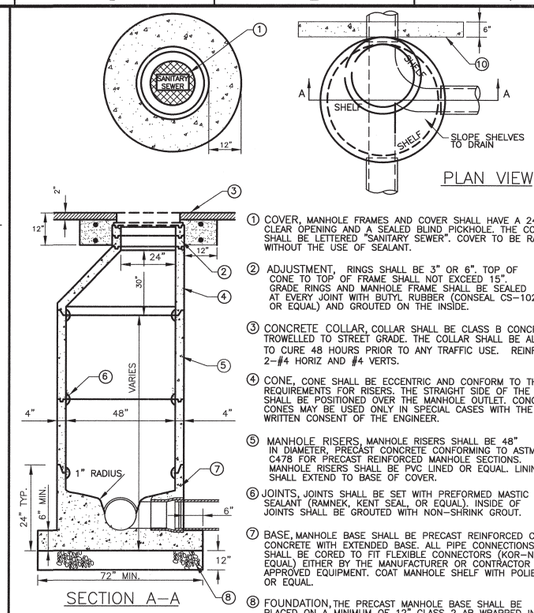

① COVER, MANHOLE FRAMES AND COVER SHALL HAVE A 24" CLEAR OPENING AND A SEALED BLIND PICKHOLE. THE COVER SHALL BE LETTERED "SANITARY SEWER". COVER TO BE RATTLE FREE WITHOUT THE USE OF SEALANT.

② ADJUSTMENT, RINGS SHALL BE 3" OR 6". TOP OF CONE TO TOP OF FRAME SHALL NOT EXCEED 15". GRADE RINGS AND MANHOLE FRAME SHALL BE SEALED AT EVERY JOINT WITH BUTYL RUBBER (CONSEAL CS–102 OR EQUAL) AND GROUTED ON THE INSIDE.

③ CONCRETE COLLAR, COLLAR SHALL BE CLASS B CONCRETE. TROWELLED TO STREET GRADE. THE COLLAR SHALL BE ALLOWED TO CURE 48 HOURS PRIOR TO ANY TRAFFIC USE. REINF WITH 2–#4 HORIZ AND #4 VERTS.

④ CONE, CONE SHALL BE ECCENTRIC AND CONFORM TO THE REQUIREMENTS FOR RISERS. THE STRAIGHT SIDE OF THE CONE SHALL BE POSITIONED OVER THE MANHOLE OUTLET. CONCENTRIC CONES MAY BE USED ONLY IN SPECIAL CASES WITH THE PRIOR WRITTEN CONSENT OF THE ENGINEER.

⑤ MANHOLE RISERS, MANHOLE RISERS SHALL BE 48" IN DIAMETER, PRECAST CONCRETE CONFORMING TO ASTM C478 FOR PRECAST REINFORCED MANHOLE SECTIONS. MANHOLE RISERS SHALL BE PVC LINED OR EQUAL. LINING SHALL EXTEND TO BASE OF COVER.

⑥ JOINTS, JOINTS SHALL BE SET WITH PREFORMED MASTIC SEALANT (RAMNEK, KENT SEAL, OR EQUAL). INSIDE OF JOINTS SHALL BE GROUTED WITH NON–SHRINK GROUT.

⑦ BASE, MANHOLE BASE SHALL BE PRECAST REINFORCED CLASS E CONCRETE WITH EXTENDED BASE. ALL PIPE CONNECTIONS SHALL BE CORED TO FIT FLEXIBLE CONNECTORS (KOR–N–SEAL OR EQUAL) EITHER BY THE MANUFACTURER OR CONTRACTOR USING APPROVED EQUIPMENT. COAT MANHOLE SHELF WITH POLIBRID EPOXY OR EQUAL.

⑧ FOUNDATION, THE PRECAST MANHOLE BASE SHALL BE PLACED ON A MINIMUM OF 12" CLASS 2 AB WRAPPED IN GEOTEXTILE.

⑨ CONTRACTOR MAY USE PRECAST CONCRETE MANHOLE BASE SECTIONS PER DETAIL C–101 IN LIEU OF CAST–IN–PLACE MANHOLE BASE SECTIONS PER DETAIL C–100 WHERE SEWER MAIN ALIGNMENTS AND PROFILES ENTERING AND LEAVING THE MANHOLE ARE ACHIEVED WITHOUT HORIZONTAL OR VERTICAL OFFSETS.

⑩ INSTALL TRENCH DAM PER C–100

PRE–CAST BASE SEWER MANHOLE — C–101

① DETAILS NOT SHOWN SHALL BE IN ACCORDANCE WITH DETAIL C–100.

② DROP MANHOLES MAY ONLY BE USED WHEN SHOWN OR WITH SPECIAL PERMISSION FROM THE DISTRICT ENGINEER.

③ PIPE AND FITTINGS SHALL BE PVC SDR 35 UNLESS OTHERWISE APPROVED BY THE DISTRICT ENGINEER.

④ BASE, USE STEEL IMPRESSION RING IN WET CONCRETE TO FORM GROOVE FOR FIRST RISER SECTION. SET FIRST RISER SECTION ON PREFORMED MASTIC SEALANT.

⑤ MANHOLE INTERIOR SHALL BE PVC–LINED. COAT MANHOLE SHELF AREA WITH POLIBRID, EPOXY, OR EQUAL.

⑥ INSTALL TRENCH DAM PER C–100

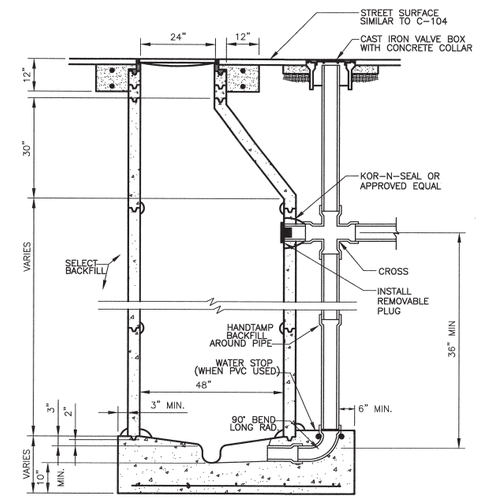

SEWER DROP MANHOLE — C–102

① DETAILS NOT SHOWN SHALL BE IN ACCORDANCE WITH DETAIL C–100.

② INVERT ELEVATION DIFFERENCE = 12" MIN, 36" MAX. FOR GREATER USE C–102

③ PIPE AND FITTINGS SHALL BE PVC SDR 35 UNLESS OTHERWISE APPROVED BY THE DISTRICT ENGINEER.

④ BASE, USE STEEL IMPRESSION RING IN WET CONCRETE TO FORM GROOVE FOR FIRST RISER SECTION. SET FIRST RISER SECTION ON PREFORMED MASTIC SEALANT.

⑤ MANHOLE CHANNEL SHALL BE CONSTRUCTED SIMILAR TO C–100.

⑥ MANHOLE INTERIOR SHALL BE PVC–LINED. COAT MANHOLE SHELF AREA WITH POLIBRID, EPOXY, OR EQUAL.

⑦ INSTALL TRENCH DAM PER C–100

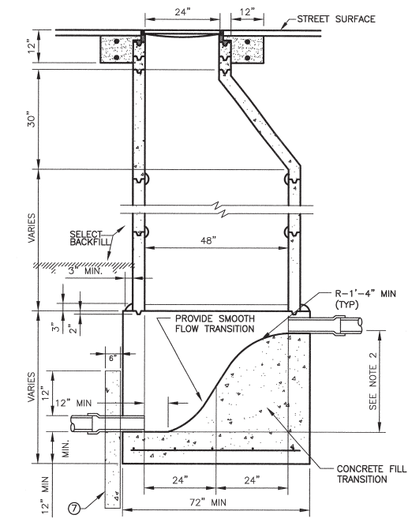

SEWER INTERMEDIATE DROP MANHOLE — C–102A

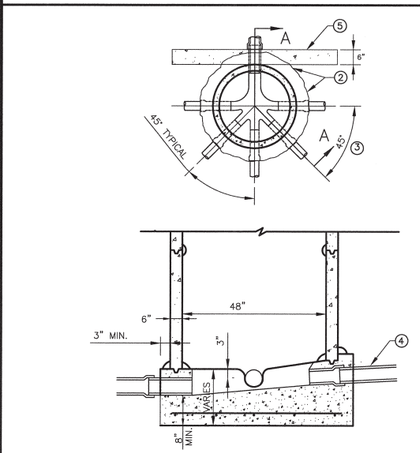

① FOR DETAILS NOT SHOWN ON THIS DRAWING – SEE DRAWING C–100 OR C–101.

② NO CONNECTIONS ARE ALLOWED IN THE DOWNSTREAM HALF OF THE MANHOLE.

③ A MAXIMUM OF 5 SIDE SEWER CONNECTIONS MAY BE MADE TO THE MANHOLE.

④ SIDE SEWERS SHALL BE RAISED TO MATCH THE SOFFIT OF THE OUTLET PIPE, OR TO PROVIDE 2" OF THE SLOPE IN THE MANHOLE, WHICHEVER IS HIGHER.

⑤ INSTALL TRENCH DAM PER C–100

END OF LINE SEWER MANHOLE — C–103

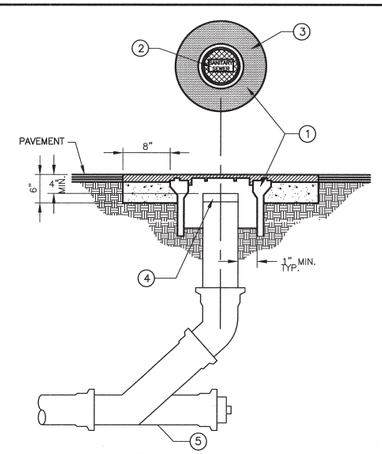

① TRAFFIC VALVE WELL AND COVER: CHRISTY G–5 FOR 4" PIPE, AND CHRISTY G–12 FOR LARGER DIAMETER PIPES, SAME SIZE AS MAIN RECOMMENDED. BE SURE CLEANING EQUIPMENT WILL PASS THROUGH.

② TRAFFIC LID MARKED "SANITARY SEWER".

③ CLASS B CONCRETE COLLAR, TROWELLED TO STREET GRADE. ALLOW TO CURE 48 HOURS PRIOR TO TRAFFIC USE.

④ REMOVABLE CAP OR PLUG.

⑤ 2 – 45° BENDS SPACED 12 INCHES APART. 22 1/2° OR SWEEP IS PREFERABLE. ALL PIPES SHALL MATCH SEWER MAIN DIAMETER.

SEWER CLEANOUT — C–104

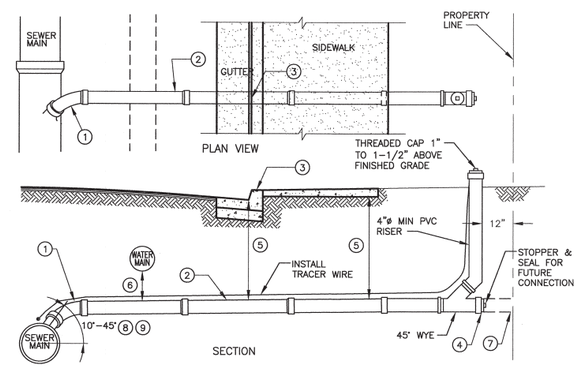

① FACTORY–FABRICATED WYE CONNECTION TO NEW SEWER MAINS (SADDLE AND TAPPED CONNECTION TO EXISTING SEWER MAINS), WITH 1/8 BEND. BEND SHALL POINT DOWNSTREAM AND ENTER MAIN AT A VERTICAL ANGLE.

② SEWER LATERAL PIPE AND FITTINGS SHALL BE SDR 35 PVC WITH A MINIMUM DIAMETER OF 4", AND A MINIMUM SLOPE OF 1/4" PER FOOT. LATERAL INSTALLATION SHALL BEGIN AT MAIN AND PROCEED TO END. GRADE SHALL BE UNIFORM FROM MAIN TO PROPERTY LINE. CHANGES IN GRADE OF LATERAL SHALL BE MADE USING LONG–RADIUS BENDS. PROVIDE WATER TIGHT PLUG AT END OF PIPE.

③ TOP OF CURB SHALL BE MARKED WITH AN "S" DIRECTLY OVER LATERAL. THE "S" SHALL BE STAMPED IN NEW CONCRETE OR CHISELED INTO EXISTING CONCRETE, AND SHALL NOT BE LESS THAN 3" LONG, 2" WIDE AND 3/16" DEEP. IN AREAS WITHOUT CURB PROVIDE 4" SQUARE CONC MARKER MARKED "S".

④ PROVIDE WATER TIGHT MECHANICAL PLUG.

⑤ DEPTH OF LATERAL SHALL NOT BE LESS THAN 36" FROM TOP OF PIPE UNLESS ENCASED IN CONCRETE OR IRON PIPE. MAXIMUM DEPTH AT GUTTERLINE SHALL BE 60" WHEN TERRAIN IS FLAT, UNLESS OTHERWISE NOTED.

⑥ A MINIMUM SEPARATION OF 12" SHALL BE MAINTAINED WHEN CROSSING WATER AND REW LINES. UNLESS OTHERWISE SHOWN, ROUTE LATERAL UNDER WATER AND REW MAINS WHEN POSSIBLE. IF VERTICAL DEFLECTIONS NECESSARY USE 22 1/2° LONG RADIUS ELBOWS.

⑦ SEWER LATERAL ON PRIVATE PROPERTY WITH CLEANOUTS SPACED AT 100 FOOT MAXIMUM INTERVALS AND WHERE LATERALS CHANGE DIRECTION.

⑧ DEEP LATERAL IN WHICH WYE IS INSTALLED VERTICALLY WILL BE ALLOWED ON CASE BY CASE BASIS. PROVIDE LONG RADIUS 22 1/2° ELBOW AT TOP.

⑨ FOR BELOW STREET GRADE HOMES THE WYE ANGLE MAY BE REDUCED TO LESS THAN 10° ON CASE BY CASE BASIS. PROVIDE 1/8" PER FOOT SLOPE MINIMUM.

⑩ ADJUST LATERAL SLOPES TO AVOID CONFLICTS WITH UTILITIES AND OTHER PIPES.

SEWER LATERAL — C–105

REV. NO.	DATE	DRWN	CHKD	REMARKS

DESIGNED BY: BJC
DRAWN BY: JAW
CHECKED BY: MDM
DATE: APRIL, 2012

CDM Smith
2295 Gateway Oaks Drive, Suite 240
Sacramento, CA 95833
Tel: (916) 567-9900

0 1/2 1
IF THIS BAR DOES NOT MEASURE 1" THEN ADJUST SCALE ACCORDINGLY

REGISTERED PROFESSIONAL ENGINEER BRUCE JAMES CORBIN C 051414 Exp. 06/30/12 CIVIL STATE OF CALIFORNIA

DIGALERT DIAL TOLL FREE 1-800-642-2444 AT LEAST TWO DAYS BEFORE YOU DIG
UNDERGROUND SERVICE ALERT OF NORTHERN CALIFORNIA

LOS OSOS WASTEWATER COLLECTION SYSTEM

GENERAL CIVIL STANDARD CIVIL DETAILS – 1

PROJECT NO.42502–83120
FILE NAME: B–GC–060
SHEET NO.
B–GC–060

©2012 CDM SMITH ALL RIGHTS RESERVED.
REUSE OF DOCUMENTS: THESE DOCUMENTS AND DESIGNS PROVIDED BY PROFESSIONAL SERVICE. INCORPORATED HEREIN, ARE THE PROPERTY OF CDM SMITH AND ARE NOT TO BE USED, IN WHOLE OR PART, FOR ANY OTHER PROJECT WITHOUT THE WRITTEN AUTHORIZATION OF CDM SMITH.
S:\Los Osos\Walnut Creek\GC\Area B & C\ B–GC–060 04/02/12 09:53 bullockll XREFS: LosOsos–bdr, CA–BJC, detail1

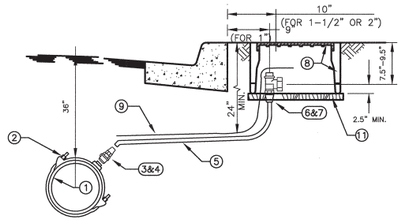

		3/4"
①	WATER MAIN	PER PLAN
②	SERVICE SADDLE	BRONZE, DOUBLE STRAP, JAMES JONES J-979 FOR AC PIPE JAMES JONES J-969 FOR PVC PIPE OR APPROVED EQUAL
③	CORPORATION STOP	GROUNDKEY: JAMES JONES J-1944 1" SIZE ONLY, MIP X MIP #41
④	ADAPTER	1" FIP X INSTATITE, MUELLER H15456
⑤	SERVICE LATERAL	1" POLYETHELYNE ONLY IPS SIZE, 200 PSI MINIMUM, WESTFLEX GOLD LABEL 3408, DRISCOPIPE, OR APPROVED EQUAL.
⑥	ANGLE METER STOP (BALL TYPE)	JAMES JONES J-1527 (1"X1" OR 1"X 3/4")
⑦	ADAPTER	1" MIP X INSTATIGHT H15456
⑧	METER BOX AND LID	BROOKS 37 SERIES (TRAFFIC LID IN TRAFFIC AREA ONLY)
⑨	10 GAGE TRACER WIRE PER SPECIFICATIONS.	
⑩	IN UNPAVED AREAS, RAISE METER BOX 1" ABOVE THE ADJACENT FINISHED SURFACE.	
⑪	1" X 12" CONCRETE BASE	
⑫	CUSTOMER SIDE CURB STOP – JONES J 1913W	

SINGLE WATER SERVICE C-110

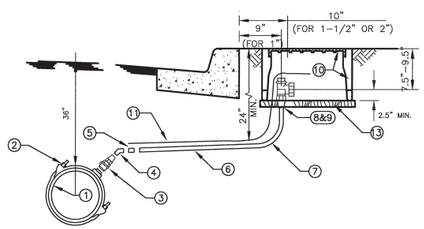

		1-1/2"
①	WATER MAIN	PER PLAN
②	SERVICE SADDLE	BRONZE, DOUBLE STRAP, JAMES JONES J-979 FOR AC PIPE JAMES JONES J-969 FOR PVC PIPE OR APPROVED EQUAL
③	CORPORATION STOP	BALL VALVE: JAMES JONES J-1943 2" SIZE ONLY, MIP X MIP
④	BRASS 45° EL	2" 45° ELBOW ONLY
⑤	ADAPTER	FORD 2" PAC COUPLING X MIP
⑥	SERVICE LATERAL	2" SCH 80 PVC ONLY
⑦	90° ELBOW	2" SCH 80 90° ELBOW
⑧	ANGLE METER STOP (BALL TYPE)	FORD FB11027
⑨	ADAPTER	2" SCH 80 MIP X SOC
⑩	METER BOX AND LID	BROOKS 38 SERIES (TRAFFIC LID IF IN DRIVEWAY)
⑪	10 GAGE TRACER WIRE PER SPECIFICATIONS.	
⑫	IN UNPAVED AREAS, RAISE METER BOX 1" ABOVE THE ADJACENT FINISHED SURFACE.	
③	1" X 12" CONCRETE BASE	
④	CUSTOMER SIDE CURB STOP – JF108	

SINGLE WATER SERVICE C-111

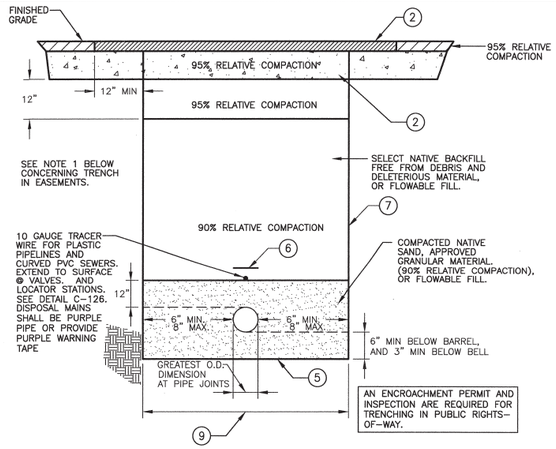

NOTES:

1. A MINIMUM OF 90% RELATIVE COMPACTION IS PERMITTED IN A NON-ROADWAY TRENCH WHEN NO STRUCTURES ARE TO BE BUILT OVER THE TRENCH. IF STRUCTURES ARE TO BE BUILT OVER THE TRENCH, USE RELATIVE COMPACTIONS SHOWN ON THE TRENCH SECTION ABOVE.
2. PAVEMENT SECTIONS SHALL BE NO LESS THAN EXISTING STRUCTURAL SECTIONS, AND AS REQUIRED BY THE COUNTY FOR TRENCHES WITHIN A COUNTY RIGHT-OF-WAY. SEE DETAIL C-120.
3. SEE DETAIL C-116B FOR WET TRENCH SECTION.
4. A DRY TRENCH IS A TRENCH IN NON-GROUNDWATER AREAS.
5. WHERE THE BOTTOM OF THE TRENCH HAS BEEN DISTURBED, THE CONTRACTOR SHALL SCARIFY AND COMPACT THE SUBGRADE TO 90% RELATIVE COMPACTION.
6. 3" WIDE POLYETHYLENE NON-DETECTABLE WARNING TAPE 12" ABOVE ALL PIPE AND LATERALS.
7. VERTICAL TRENCH WALL DEPICTED, SHORING SHALL BE DESIGNED BY CONTRACTOR. TRENCH WALLS MAY BE SLOPED, CONTRACTOR SHALL COORDINATE TRENCH CONFIGURATION WITH OTHER GRAVITY, FORCEMAIN, RECYCLED WATER, AND CONDUIT PIPELINE TRENCH SECTIONS, AND CONFORM TO CULTURAL AND ENVIRONMENTAL RESTRICTIONS, THE TRAFFIC MANAGEMENT PLAN REQUIREMENTS, AND SHALL PROTECT EXISTING IMPROVEMENTS.
8. IF FLOWABLE FILL IS USED FOR BACKFILL, CONTRACTOR SHALL PROTECT AGAINST BUOYANT FORCE.
9. THIS DIMENSION AT PIPE SPRINGLINE, PLUS 24" FOR T-CUT, CONSTITUTES THE PAY LIMIT FOR AC AND AB REPLACEMENT, UNO IN TABLE 1 OF DETAIL C-120A

PIPELINE DRY TRENCH SECTION
10" AND SMALLER C-116

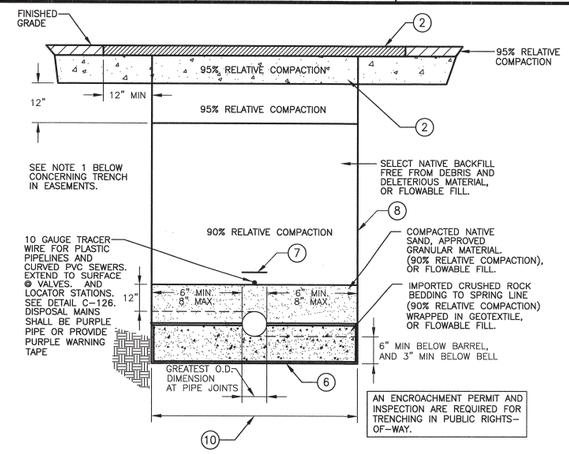

NOTES:

1. A MINIMUM OF 90% RELATIVE COMPACTION IS PERMITTED IN A NON-ROADWAY TRENCH WHEN NO STRUCTURES ARE TO BE BUILT OVER THE TRENCH. IF STRUCTURES ARE TO BE BUILT OVER THE TRENCH, USE RELATIVE COMPACTIONS SHOWN ON THE TRENCH SECTION ABOVE.
2. PAVEMENT SECTIONS SHALL BE NO LESS THAN EXISTING STRUCTURAL SECTIONS, AND AS REQUIRED BY THE COUNTY FOR TRENCHES WITHIN A COUNTY RIGHT-OF-WAY. SEE DETAIL C-120.
3. SEE DETAIL C-116B FOR WET TRENCH SECTION.
4. A DRY TRENCH IS A TRENCH IN NON-GROUNDWATER AREAS.
5. ENDS OF GEOTEXTILE SHALL TOUCH PIPE BARREL. GEOTEXTILE MAY BE LAPPED UNDER PIPE IF DESIRED.
6. WHERE THE BOTTOM OF THE TRENCH HAS BEEN DISTURBED, THE CONTRACTOR SHALL SCARIFY AND COMPACT THE SUBGRADE TO 90% RELATIVE COMPACTION.
7. 3" WIDE POLYETHYLENE NON-DETECTABLE WARNING TAPE 12" ABOVE ALL PIPE AND LATERALS.
8. VERTICAL TRENCH WALL DEPICTED, SHORING SHALL BE DESIGNED BY CONTRACTOR. TRENCH WALLS MAY BE SLOPED, CONTRACTOR SHALL COORDINATE TRENCH CONFIGURATION WITH OTHER GRAVITY, FORCEMAIN, RECYCLED WATER, AND CONDUIT PIPELINE TRENCH SECTIONS, AND CONFORM TO CULTURAL AND ENVIRONMENTAL RESTRICTIONS, THE TRAFFIC MANAGEMENT PLAN REQUIREMENTS, AND SHALL PROTECT EXISTING IMPROVEMENTS.
9. IF FLOWABLE FILL IS USED FOR BACKFILL, CONTRACTOR SHALL PROTECT AGAINST BUOYANT FORCE.
10. THIS DIMENSION AT PIPE SPRINGLINE, PLUS 24" FOR T-CUT, CONSTITUTES THE PAY LIMIT FOR AC AND AB REPLACEMENT, UNO IN TABLE 1 OF DETAIL C-120A

PIPELINE DRY TRENCH SECTION
12" AND LARGER C-116A

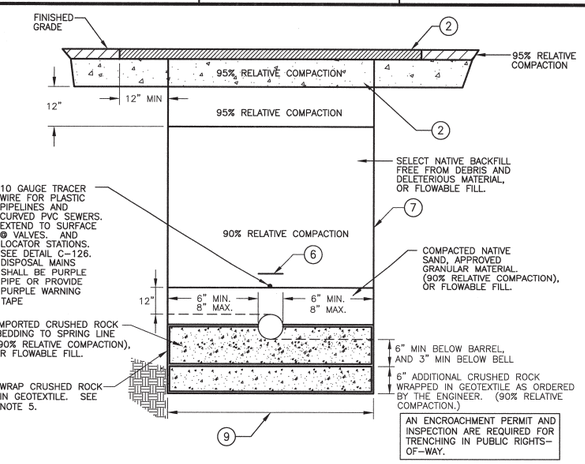

NOTES:

1. A MINIMUM OF 90% RELATIVE COMPACTION IS PERMITTED IN A NON-ROADWAY TRENCH WHEN NO STRUCTURES ARE TO BE BUILT OVER THE TRENCH. IF STRUCTURES ARE TO BE BUILT OVER THE TRENCH, USE RELATIVE COMPACTIONS SHOWN ON THE TRENCH SECTION ABOVE.
2. PAVEMENT SECTIONS SHALL BE NO LESS THAN EXISTING STRUCTURAL SECTIONS, AND AS REQUIRED BY THE COUNTY FOR TRENCHES WITHIN A COUNTY RIGHT-OF-WAY. SEE DETAIL C-120.
3. SEE DETAILS C-116 AND C-116A FOR DRY TRENCH SECTIONS.
4. A WET TRENCH IS A TRENCH IN GROUNDWATER AREAS BUT HAS BEEN DEWATERED IN ACCORDANCE WITH THE CONTRACT REQUIREMENTS.
5. ENDS OF GEOTEXTILE SHALL TOUCH PIPE BARREL. GEOTEXTILE MAY BE LAPPED UNDER PIPE IF DESIRED.
6. 3" WIDE POLYETHYLENE NON-DETECTABLE WARNING TAPE 12" ABOVE ALL PIPE AND LATERALS.
7. VERTICAL TRENCH WALL DEPICTED, SHORING SHALL BE DESIGNED BY CONTRACTOR. TRENCH WALLS MAY BE SLOPED, CONTRACTOR SHALL COORDINATE TRENCH CONFIGURATION WITH OTHER GRAVITY, FORCEMAIN, RECYCLED WATER, AND CONDUIT PIPELINE TRENCH SECTIONS, AND CONFORM TO CULTURAL AND ENVIRONMENTAL RESTRICTIONS, THE TRAFFIC MANAGEMENT PLAN REQUIREMENTS, AND SHALL PROTECT EXISTING IMPROVEMENTS.
8. IF FLOWABLE FILL IS USED FOR BACKFILL, CONTRACTOR SHALL PROTECT AGAINST BUOYANT FORCE.
9. THIS DIMENSION AT PIPE SPRINGLINE, PLUS 24" FOR T-CUT, CONSTITUTES THE PAY LIMIT FOR AC AND AB REPLACEMENT, UNO IN TABLE 1 OF DETAIL C-120A

PIPELINE WET TRENCH SECTION
ALL DIAMETERS C-116B

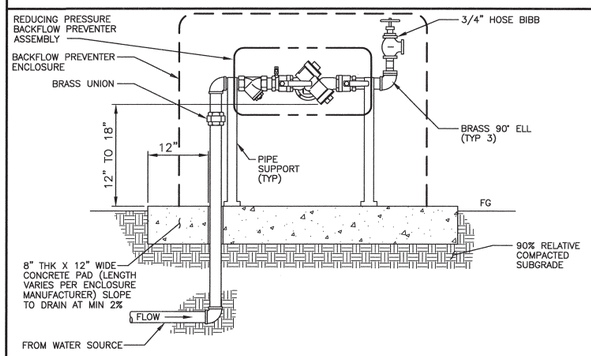

NOTES:

1. EQUIPMENT TO BE INSTALLED AT A MINIMUM OF 24" FROM ANY STRUCTURES OR HARDSCAPING.
2. WHEN UNIT IS NEXT TO A STRUCTURE (I.E. WALL, BUILDING, ETC.) MOUNT TEST COCKS ON OPEN OR NON-STUCTURE SIDE.

BACKFLOW PREVENTER WITH HOSE BID AND ENCLOSURE
NOT TO SCALE C-112

REV. NO.	DATE	DRWN	CHKD	REMARKS

DESIGNED BY: BJC
DRAWN BY: JAW
CHECKED BY: MDM
DATE: APRIL, 2012

CDM Smith
2295 Gateway Oaks Drive, Suite 240
Sacramento, CA 95833
Tel: (916) 567-9900

0 1/2 1
IF THIS BAR DOES NOT MEASURE 1" THEN ADJUST SCALE ACCORDINGLY

REGISTERED PROFESSIONAL ENGINEER BRUCE JAMES CORWIN C 051414 Exp. 06/30/12 CIVIL STATE OF CALIFORNIA

DIGALERT
DIAL TOLL FREE 1-800-642-2444
AT LEAST TWO DAYS BEFORE YOU DIG
UNDERGROUND SERVICE ALERT OF NORTHERN CALIFORNIA

LOS OSOS WASTEWATER COLLECTION SYSTEM

GENERAL CIVIL STANDARD CIVIL DETAILS – 2

PROJECT NO.42502-83120
FILE NAME: B-GC-061
SHEET NO.
B-GC-061

©2012 CDM SMITH ALL RIGHTS RESERVED.
REUSE OF DOCUMENTS: THESE DOCUMENTS AND DESIGNS PROVIDED BY PROFESSIONAL SERVICE, INCORPORATED HEREIN, ARE THE PROPERTY OF CDM SMITH AND ARE NOT TO BE USED, IN WHOLE OR PART, FOR ANY OTHER PROJECT WITHOUT THE WRITTEN AUTHORIZATION OF CDM SMITH.
S:\Los Osos\Walnut Creek\GC\Area B & C\ B-GC-061 04/02/12 09:53 bullockll XREFS: LosOsos-bdr, CA-BJC, detail1

©2012 CDM SMITH ALL RIGHTS RESERVED.
REUSE OF DOCUMENTS: THESE DOCUMENTS AND DESIGNS PROVIDED BY PROFESSIONAL SERVICE, INCORPORATED HEREIN, ARE THE PROPERTY OF CDM SMITH AND ARE NOT TO BE USED, IN WHOLE OR PART, FOR ANY OTHER PROJECT WITHOUT THE WRITTEN AUTHORIZATION OF CDM SMITH.
S:\Los Osos\Walnut Creek\GC\Area B & C\ B-GC-062 04/02/12 09:53 bullockll XREFS: LosOsos-bdr, CA-BJC, detail1

CRITERIA FOR THE SEPARATION OF WATER MAINS AND SANITARY SEWERS

CASE 1
NEW SEWER MAIN BEING INSTALLED
(SEE FIGURE 1)

ZONE	SPECIAL CONSTRUCTION REQUIRED FOR SEWER:
A	SEWER LINES PARALLEL TO WATER MAINS SHALL NOT BE PERMITTED IN THIS ZONE WITHOUT APPROVAL FROM THE RESPONSIBLE HEALTH AGENCY AND WATER SUPPLIER.
B	A SEWER LINE PLACED PARALLEL TO A WATER LINE SHALL BE CONSTRUCTED OF: 1. PLASTIC SEWER PIPE WITH RUBBER RING JOINTS (PER ASTM D3034) OR EQUIVALENT. 2. CAST OR DUCTILE IRON PIPE WITH COMPRESSION JOINTS.
C	A SEWER LINE CROSSING A WATER MAIN SHALL BE CONSTRUCTED OF: 1. DUCTILE IRON PIPE WITH HOT DIP BITUMINOUS COATING AND MECHANICAL JOINTS. 2. A CONTINUOUS SECTION OF CLASS 200 (DR 14 PER AWWA C900) PLASTIC PIPE, OR EQUIVALENT. CENTERED OVER THE PIPE BEING CROSSED. 3. ANY SEWER PIPE WITHIN A CONTINUOUS SLEEVE.
D	A SEWER LINE CROSSING A WATER MAIN SHALL BE CONSTRUCTED OF: 1. A CONTINUOUS SECTION OF DUCTILE IRON PIPE WITH HOT DIP BITUMINOUS COATING. 2. A CONTINUOUS SECTION OF CLASS 200 (DR 14 PER AWWA C900) PLASTIC PIPE OR EQUIVALENT. CENTERED OVER THE PIPE BEING CROSSED. 3. ANY SEWER PIPE WITHIN A CONTINUOUS SLEEVE. 4. ANY SEWER PIPE SEPARATED BY A TEN-FOOT BY TEN-FOOT, FOUR-INCH THICK REINFORCED CONCRETE SLAB.

CASE 2
NEW WATER MAIN BEING INSTALLED
(SEE FIGURE 2)

ZONE	SPECIAL CONSTRUCTION REQUIRED FOR WATER:
A	NO WATER MAINS PARALLEL TO SERVICE SHALL BE CONSTRUCTED WITHOUT APPROVAL FROM THE HEALTH AGENCY.
B	IF THE SEWER PARALLELING THE WATER MAIN DOES NOT MEET THE CASE 1, ZONE B REQUIREMENTS, THE WATER MAIN SHALL BE CONSTRUCTED OF: 1. DUCTILE IRON PIPE WITH HOT DIP BITUMINOUS COATING. 2. DIPPED AND WRAPPED ONE-FOURTH-INCH-THICK WELDED STEEL PIPE. 3. CLASS 200 PRESSURE RATED PLASTIC WATER PIPE (DR 14 PER AWWA C900) OR EQUIVALENT. 4. REINFORCED CONCRETE PRESSURE PIPE, STEEL CYLINDER TYPE, PER AWWA (C300-74, C301-79 OR C303-70). 5. CLASS 200, TYPE II, ASBESTOS-CEMENT PRESSURE PIPE.
C	IF THE SEWER CROSSING THE WATER MAIN DOES NOT MEET THE CASE 1, ZONE C REQUIREMENTS, THE WATER MAIN SHALL HAVE NO JOINTS IN ZONE C AND BE CONSTUCTED OF: 1, 2, 3 OR 4 AS IN ZONE B, ABOVE.
D	IF THE SEWER CROSSING THE WATER MAIN DOES NOT MEET THE CASE 1, ZONE D REQUIREMENTS, THE WATER MAIN SHALL HAVE NO JOINTS WITHIN FOUR FEET FROM EITHER SIDE OF THE SEWER AND SHALL BE CONSTRUCTED OF: 1, 2, 3 OR 4 AS IN ZONE B, ABOVE.

WATER AND SEWER SEPARATION NOTES — C-117

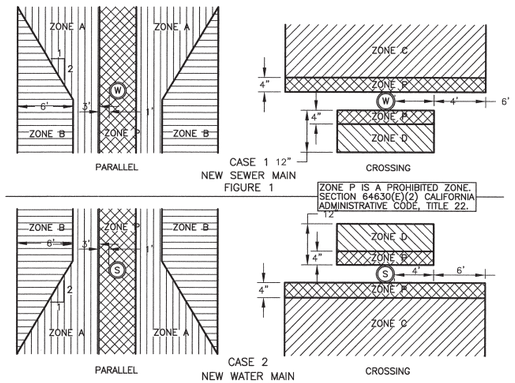

NOTES AND DEFINITIONS

- COMPRESSION JOINT – A PUSH-ON JOINT THAT SEALS BY MEANS OF THE COMPRESSION OF A RUBBER RING OR GASKET BETWEEN THE PIPE AND A BELL OF COUPLING.
- DIMENSIONS ARE FROM THE OUTSIDE OF WATER MAIN TO OUTSIDE OF SEWER LINE OR MANHOLE.
- FUSED JOINT – THE JOINING OF SECTIONS OF PIPE USING THERMAL OR CHEMICAL BONDING PROCESSES.
- GROUND WATER – SUBSURFACE WATER FOUND IN THE SATURATION ZONE.
- HEALTH AGENCY – THE STATE DEPOARTMENT OF HEALTH SERVICES. FOR THOSE WATER SYSTEMS SUPPLYING LESS THAN 200 SERVICE CONNECTIONS, THE LOCAL HEALTH OFFICER SHALL ACT FOR THE DEPARTMENT OF HEALTH SERVICES.
- HOUSE LATERAL – A SEWER PIPE CONNECTING THE BUILDING DRAIN AND THE MAIN SEWER LINE.
- LOW HEAD WATER MAIN – ANY WATER MAIN WHICH HAS A PRESSURE OF 5 PSI OR LESS AT ANY TIME AT ANY POINT IN THE MAIN.
- MECHANICAL JOINT – BOLTED JOINT
- RATED WORKING WATER PRESSURE OR PRESSURE CLASS – A PIPE CLASSIFICATION SYSTEM BASED UPON INTERNAL WORKING PRESSURE OF THE FLUID IN THE PIPE, TYPE OF PIPE MATERIAL, AND THE THICKNESS OF THE PIPE WALL.
- SLEEVE – A PROTECTIVE TUBE OF STEEL WITH A WALL THICKNESS OF NOT LESS THAN ONE-FOURTH INCH INTO WHICH A PIPE IS INSERTED.
- WATER SUPPLIER – ANY PERSON WHO OWNS OR OPERATES A PUBLIC WATER SYSTEM

WATER AND SEWER SEPARATION DIAGRAM — C-118

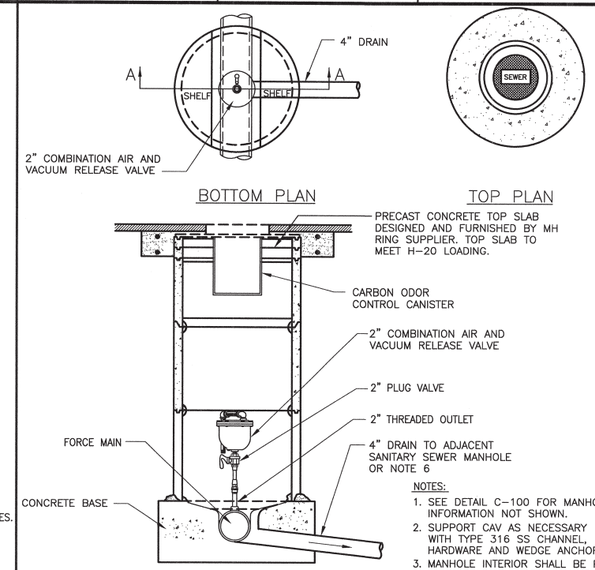

NOTES:
1. SEE DETAIL C-100 FOR MANHOLE INFORMATION NOT SHOWN.
2. SUPPORT CAV AS NECESSARY WITH TYPE 316 SS CHANNEL, HARDWARE AND WEDGE ANCHORS.
3. MANHOLE INTERIOR SHALL BE PVC T-LOCK LINED. COAT MANHOLE SHELF AREA WITH EPOXY: POLYBRID, EUCOPOXY, OR EQUAL.
4. PROVIDE SHORT STYLE CAV TO FIT SPACE AVAILABLE.
5. PROVIDE VENTED LID.
6. IF NO ADJACENT SS MH, TERMINATE DRAIN IN 6" POCKET OF TYPE E MATERIAL ENCASED IN GEOTEXTILE.

SEWAGE COMBINATION AIR/ VACUUM RELEASE VALVE MANHOLE — C-119

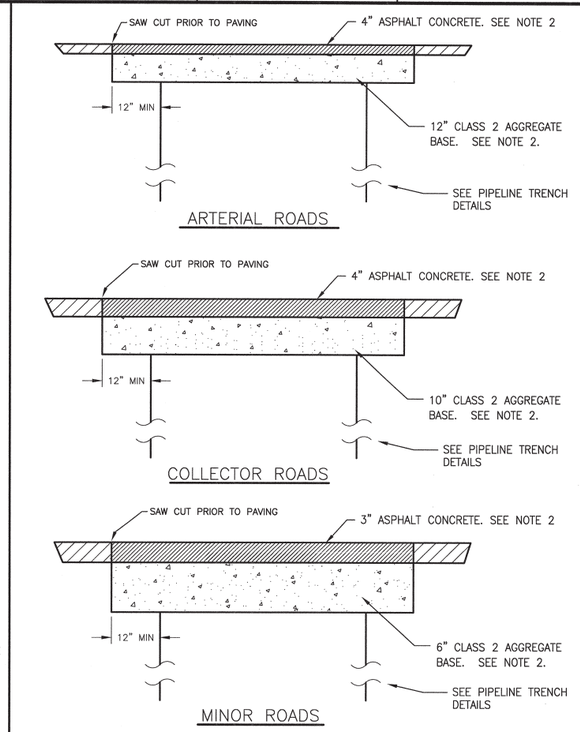

ARTERIAL ROADS	COLLECTOR ROADS	MINOR ROADS
LOS OSOS VALLEY ROAD SOUTH BAY BOULEVARD	PECHO VALLEY ROAD SANTA YSABEL AVENUE RAMONA AVENUE NIPOMO AVENUE NINTH STREET (BTW LOS OSOS VALLEY RD & RAMONA AVE) PINE AVENUE SEVENTH STREET ELEVENTH STREET EL MORO AVENUE (BTW 2ND ST & 12TH ST) SECOND STREET (BTW EL MORO AVENUE & SANTA YSABEL AVE) BINSCARTH ROAD PECHO ROAD BAYVIEW HEIGHTS DRIVE	ALL OTHER ROADS WITHIN PROJECT AREA

NOTES:
1. MINIMUM ASPHALT CONCRETE THICKNESS SHALL BE 3".
2. MATCH EXISTING ASPHALT CONCRETE AND AGGREGATE BASE THICKNESS IF THICKER.
3. ASPHALT CONCRETE SHALL BE PER SPECIFICATIONS.
4. GRAVEL AND BASE ROCK PAVED ROADS SHALL BE RESTORED TO MATCH EXISTING SECTION, IF FLOWABLE FILL IS USED, TERMINATE FLOWABLE FILL 6" BELOW GRADE AND RESTORE TO MATCH EXISTING.
5. PROVIDE AND MAINTAIN TEMPORARY PAVEMENT UNTIL PERMANENT PAVEMENT IS INSTALLED.
6. SEE DETAIL C-120A REGARDING ROADS REQUIRING FULL DEPTH RECLAMATION.

TRENCH PATCH PAVEMENT RESTORATION STRUCTURAL SECTION — C-120

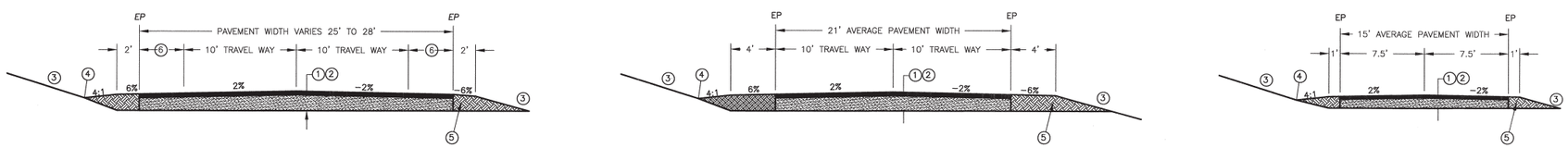

TYPICAL SECTION – PINE STREET

TYPICAL SECTION – 7TH STREET, BINSCARTH, AND SANTA YNEZ AVENUE

TYPICAL SECTION – LUPINE STREET

TABLE 1 – ROADS REQUIRING FULL DEPTH RECLAMATION

ROAD NAME	TI	STATION LIMITS OF FULL DEPTH RESTORATION		PULVERIZATION "DRY"		PULVERIZATION "WET"		STATION LIMITS OF "WET" ROAD	
BINSCARTH AVE.	6	1+25 (AT PECHO RD)	27+40 (AT BRODERSON AVE)			4"HMA	14" PTSG	1+25	27+40
7TH STREET	7	21+20 (AT RAMONA AVE)	55+00 (AT SANTA YSABEL AVE)	4"HMA	14" PCSG	4"HMA	14" PTSG	35+50	48+10
PINE STREET	7	5+20 (AT LOS OSOS VALLEY RD)	33+00 (AT RAMONA AVE)	4"HMA	14" PCSG	4"HMA	14" PTSG	26+10	33+00
SANTA YNEZ AVE.	6.5	28+00 (AT LOST OAK DR)	33+80 (AT MOUNTAIN VIEW AVE)	3"HMA	12" PCSG				
LUPINE STREET	4.5	1+20 (AT DORIS AVE)	5+40 (AT FEARN AVE)			3"HMA	12" PTSG	1+20	5+40

NOTE
PTSG = PULVERIZED TREATED AND COMPACTED SUB GRADE
PCSG = PULVERIZED COMPACTED SUB GRADE
"DRY" = STREETS WHERE ESTIMATED GROUNDWATER LEVEL IS APPROXIMATELY GREATER THAN 10-FT BELOW GRADE
"WET" = STREETS WHERE ESTIMATED GROUNDWATER LEVEL IS APPROXIMATELY LESS THAN 10-FT BELOW GRADE

TABLE 2 – ROADS WITH FULL DEPTH RECLAMATION – GENERAL SPECIFICATION

ROAD CATEGORY	PULVERIZATION "DRY"	PULVERIZATION "WET"
COLLECTOR STREET	4"HMA OVER 14" PCSG	4"HMA OVER 14" PTSG
MINOR STREET	3"HMA OVER 12" PCSG	3"HMA OVER 12" PTSG

NOTES:
1. THE STRUCTURAL SECTION SHALL BE PER TABLE 1 FOR SPECIFIC ROADS REQUIRING FULL DEPTH RECLAMATION; TABLE 2 SHALL BE THE SPECIFICATION FOR OTHER ROADS WITHIN THE PROJECT AREA THAT RECEIVE FULL DEPTH RECLAMATION AT THE CONTRACTORS OPTION OR AS DIRECTED BY ENGINEER.
2. TYPICAL STRUCTURAL ROAD SECTION SHALL BE:
   HOT MIX ASPHALT (HMA) PER TABLE TO 95% RELATIVE COMPACTION, OVER
   PULVERIZE COMPACTED SUBGRADE OR PULVERIZED TREATED AND COMPACTED SUBGRADE TO 95% RELATIVE COMPACTION,
3. CUT AND FILL SLOPE SHALL NOT EXCEED 2 HORIZONTAL TO 1 VERTICAL OR 3H:1V IN SAND.
4. THE CONTRACTOR SHALL ACCOMMODATE FOR ROADSIDE DRAINAGE SUCH THAT IT DOES NOT ERODE THE ROAD SHOULDER. THE SIDE SLOPE OF ANY DRAINAGE SWALE ADJACENT TO THE ROADWAY SHALL NOT EXCEED 4h:1v.
5. LIMITS OF PULVERIZATION SHALL EXTEND TO THE EDGE OF EXISTING ROAD PAVEMENT. PERFORM MINOR GRADING ON SHOULDERS TO ALLOW FOR DRAINAGE PER THE SECTION DETAILS OR AS DIRECTED BY ENGINEER.
6. WIDTH VARIES UP TO 4'

TYPICAL FULL DEPTH ROAD RECLAMATION — C-120A

REV. NO.	DATE	DRWN	CHKD	REMARKS

DESIGNED BY: BJC
DRAWN BY: JAW
CHECKED BY: MDM
DATE: APRIL, 2012

CDM Smith
2295 Gateway Oaks Drive, Suite 240
Sacramento, CA 95833
Tel: (916) 567-9900

0 1/2 1
IF THIS BAR DOES NOT MEASURE 1" THEN ADJUST SCALE ACCORDINGLY

REGISTERED PROFESSIONAL ENGINEER BRICE JAMES CORNER C 061414 Exp. 06/30/12 CIVIL STATE OF CALIFORNIA

DIGALERT
DIAL TOLL FREE 1-800-642-2444
AT LEAST TWO DAYS BEFORE YOU DIG
UNDERGROUND SERVICE ALERT OF NORTHERN CALIFORNIA

LOS OSOS WASTEWATER COLLECTION SYSTEM

GENERAL CIVIL STANDARD CIVIL DETAILS – 3

PROJECT NO.42502-83120
FILE NAME: B-GC-062
SHEET NO.
B-GC-062

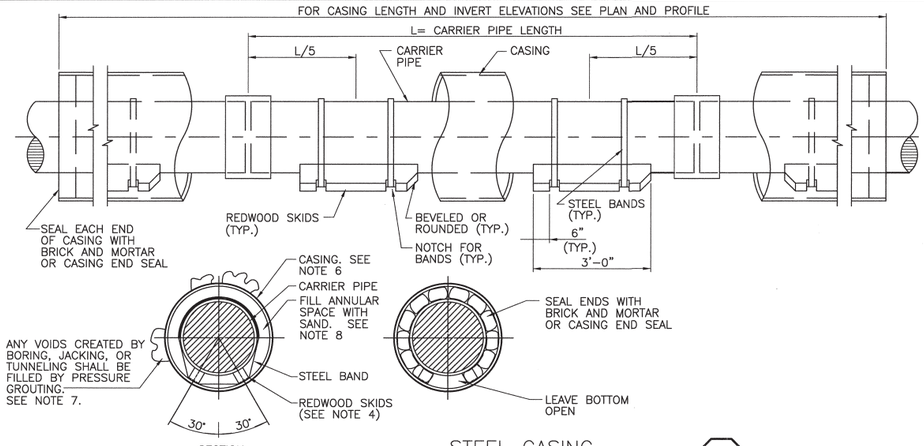

STEEL CASING — C-121

NOTES:

1. CASING SHALL BE SMOOTH PIPE.
2. CARRIER PIPE SHALL BE INSTALLED PER MANUFACTURER'S RECOMMENDATIONS.
3. CARRIER PIPE SHALL BE TESTED BEFORE SEALING ENDS OF PIPE.
4. SKIDS SHALL BE GREASED TO FACILITATE CARRIER PIPE INSTALLATION.
5. SEE SPECIFICATION SECTION 02151 BORING AND JACKING FOR ADDITIONAL REQUIREMENTS.
6. CASING I.D. SHALL BE PIPE BELL O.D. PLUS 12" MIN, BUT NOT LESS THAN 20".
7. PROVIDE THREADED GROUT PORTS IN CASING TO ENABLE PRESSURE GROUTING. SEAL WITH THREADED CAST IRON OR STEEL PLUGS UPON COMPLETION.
8. BLOCK CARRIER PIPE TO PREVENT PIPE FLOTATION OR DISTURBANCE DURING SAND BACKFILLING.
9. IF TRENCHLESS SECTION INCLUDES CONDUITS, ADD 12" TO SUM OF CARRIER PIPE BELL OD AND LARGEST CONDUIT BELL OD TO ESTABLISH CASING I.D.

CASING SIZE	CASING WALL THICKNESS (a)	SKID SIZE
20", 22"	1/2" MIN	4" x 4"
24"	1/2" MIN	4" x 4"
26"	1/2" MIN	4" x 4"
30"	1/2" MIN	4" x 4"
34"	1/2" MIN	4" x 4"
40"	5/8" MIN	6" x 6"
44"	5/8" MIN	6" x 6"

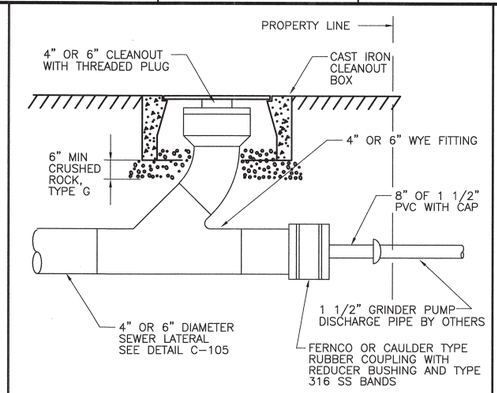

GRINDER PUMP DISCHARGE TO SEWER LATERAL — C-122

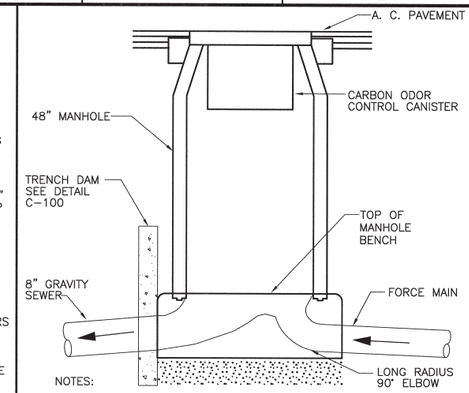

NOTES:

1. DETAILS NOT SHOWN SHALL BE IN ACCORDANCE WITH C-100
2. SEE NOTE 4, C-124

FORCE MAIN TO GRAVITY SEWER TRANSITION MANHOLE — C-123

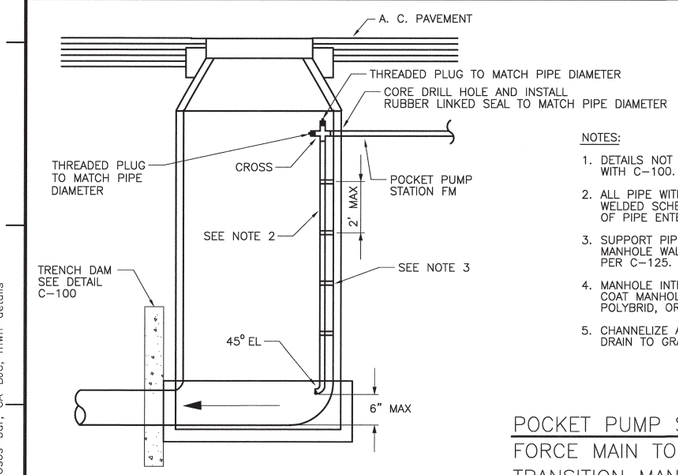

NOTES:

1. DETAILS NOT SHOWN SHALL BE IN ACCORDANCE WITH C-100.
2. ALL PIPE WITHIN MANHOLE SHALL BE SOLVENT WELDED SCHEDULE 40 PVC, TO MATCH DIAMETER OF PIPE ENTERING MANHOLE.
3. SUPPORT PIPE AS CLOSE AS POSSIBLE ON MANHOLE WALL WITH TYPE 316 SS PIPE CLAMPS PER C-125.
4. MANHOLE INTERIOR SHALL BE PVC T-LOCK LINED. COAT MANHOLE BENCH AREA WITH EPOXY; POLYBRID, OR EQUAL.
5. CHANNELIZE AND SLOPE BOTTOM OF MANHOLE TO DRAIN TO GRAVITY SEWER.

POCKET PUMP STATION FORCE MAIN TO GRAVITY SEWER TRANSITION MANHOLE — C-124

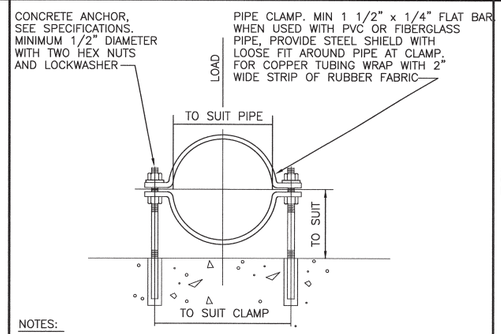

NOTES:

1. PIPE CLAMP, NUTS, LOCKWASHERS, ANCHORS AND SHIELDS TO BE TYPE 316 STAINLESS STEEL
2. THIS PIPE CLAMP IS LIMITED TO PIPES UP TO 4" DIAMETER INCLUSIVE
3. FOR ADDITIONAL REQUIREMENTS SEE SPECIFICATIONS

PIPE CLAMP (FOR PIPE 4" DIAMETER AND SMALLER) — C-125

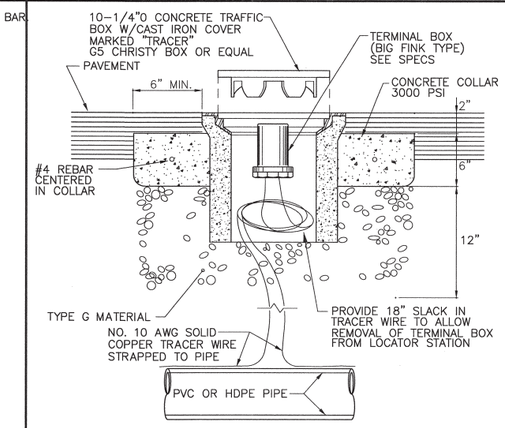

FLUSH MOUNTED LOCATOR STATION CONCRETE BOX — C-126

REV. NO.	DATE	DRWN	CHKD	REMARKS

DESIGNED BY: BJC
DRAWN BY: JAW
CHECKED BY: MDM
DATE: APRIL, 2012

CDM Smith
2295 Gateway Oaks Drive, Suite 240
Sacramento, CA 95833
Tel: (916) 567-9900

0 1/2 1
IF THIS BAR DOES NOT MEASURE 1" THEN ADJUST SCALE ACCORDINGLY

REGISTERED PROFESSIONAL ENGINEER BRUCE JAMES CORRIN C 061414 Exp. 06/30/12 CIVIL STATE OF CALIFORNIA

DIGALERT DIAL TOLL FREE 1-800-642-2444 AT LEAST TWO DAYS BEFORE YOU DIG
UNDERGROUND SERVICE ALERT OF NORTHERN CALIFORNIA

LOS OSOS WASTEWATER COLLECTION SYSTEM

GENERAL CIVIL STANDARD CIVIL DETAILS – 4

PROJECT NO.42502-83120
FILE NAME: B-GC-063
SHEET NO.
B-GC-063

©2012 CDM SMITH ALL RIGHTS RESERVED.
REUSE OF DOCUMENTS: THESE DOCUMENTS AND DESIGNS PROVIDED BY PROFESSIONAL SERVICE, INCORPORATED HEREIN, ARE THE PROPERTY OF CDM SMITH AND ARE NOT TO BE USED, IN WHOLE OR PART, FOR ANY OTHER PROJECT WITHOUT THE WRITTEN AUTHORIZATION OF CDM SMITH.
S:\Los Osos\Walnut Creek\GC\Area B & C\ B-GC-063 04/02/12 09:53 bullockll XREFS: LosOsos-bdr, CA-BJC, mwh-details

©2012 CDM SMITH ALL RIGHTS RESERVED.
REUSE OF DOCUMENTS: THESE DOCUMENTS AND DESIGNS PROVIDED BY PROFESSIONAL SERVICE, INCORPORATED HEREIN, ARE THE PROPERTY OF CDM SMITH AND ARE NOT TO BE USED, IN WHOLE OR PART, FOR ANY OTHER PROJECT WITHOUT THE WRITTEN AUTHORIZATION OF CDM SMITH.
S:\Los Osos\Walnut Creek\GC\Area B & C\ B-GC-064 04/02/12 09:53 bullockll XREFS: LosOsos-bdr, CA-BJC, gciv_det

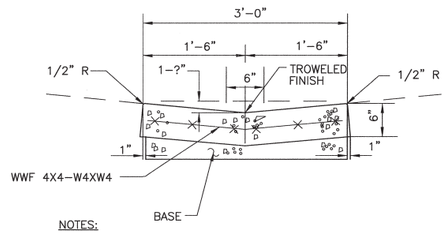

NOTES:

1. EXPANSION JOINTS OF ½" PREMOLDED JOINT FILLER SHALL BE PLACED 50 FOOT SPACING AND WHERE GUTTER BUTTS OTHER CONCRETE STRUCTURES.
2. BASE AND SUBGRADE PREPARATION SHALL MATCH ADJACENT PAVING.
3. FOR PATCHING EXISTING GUTTERS, 24" CUT BACK MINIMUM.

CONCRETE CROSS GUTTER — C-127
NOT TO SCALE

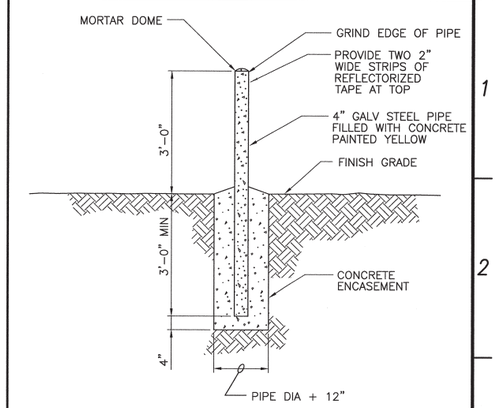

GUARD POST — C-129
NOT TO SCALE

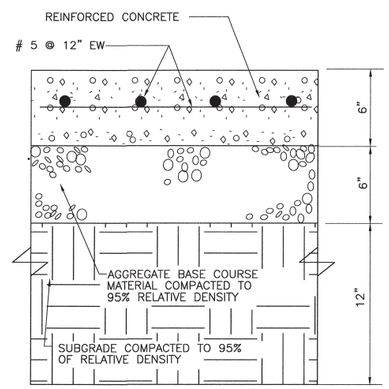

CONCRETE PAVEMENT — C-131
NOT TO SCALE

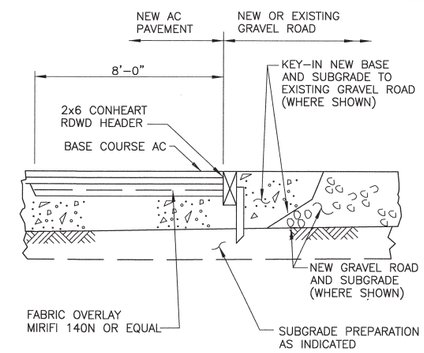

AC PAVEMENT-GRAVEL TRANSITION — C-141
NOT TO SCALE

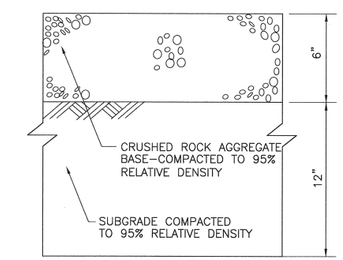

GRAVEL PAVING — C-144
NOT TO SCALE

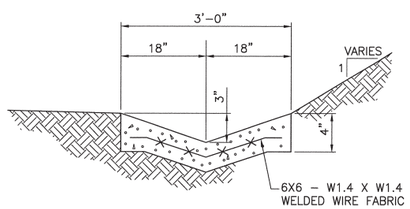

NOTES:

1. EXPANSION JOINTS OF ONE-HALF INCH BITUMINOUS MATERIAL SHALL BE PLACED AT 50-FEET SPACING AND WHERE SWALE BUTTS OTHER CONCRETE STRUCTURES.
2. PREPARE BASE AND SUBBASE PER DETAIL C-131.

CONCRETE LINED SWALE — C-206
NOT TO SCALE

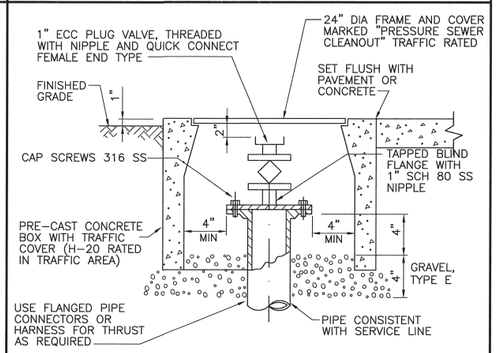

PRESSURIZED SYSTEM CLEANOUT TO GRADE (PCOTG) — C-305
NOT TO SCALE

REV. NO.	DATE	DRWN	CHKD	REMARKS

DESIGNED BY: BJC
DRAWN BY: JAW
CHECKED BY: MDM
DATE: APRIL, 2012

CDM Smith
2295 Gateway Oaks Drive, Suite 240
Sacramento, CA 95833
Tel: (916) 567-9900

0 1/2 1
IF THIS BAR DOES NOT MEASURE 1" THEN ADJUST SCALE ACCORDINGLY

REGISTERED PROFESSIONAL ENGINEER BRUCE JAMES CORWIN C 051414 Exp. 06/30/12 CIVIL STATE OF CALIFORNIA

DIGALERT
DIAL TOLL FREE 1-800-642-2444
AT LEAST TWO DAYS BEFORE YOU DIG
UNDERGROUND SERVICE ALERT OF NORTHERN CALIFORNIA

LOS OSOS WASTEWATER COLLECTION SYSTEM

GENERAL CIVIL STANDARD CIVIL DETAILS - 5

PROJECT NO.42502-83120
FILE NAME: B-GC-064
SHEET NO.
B-GC-064

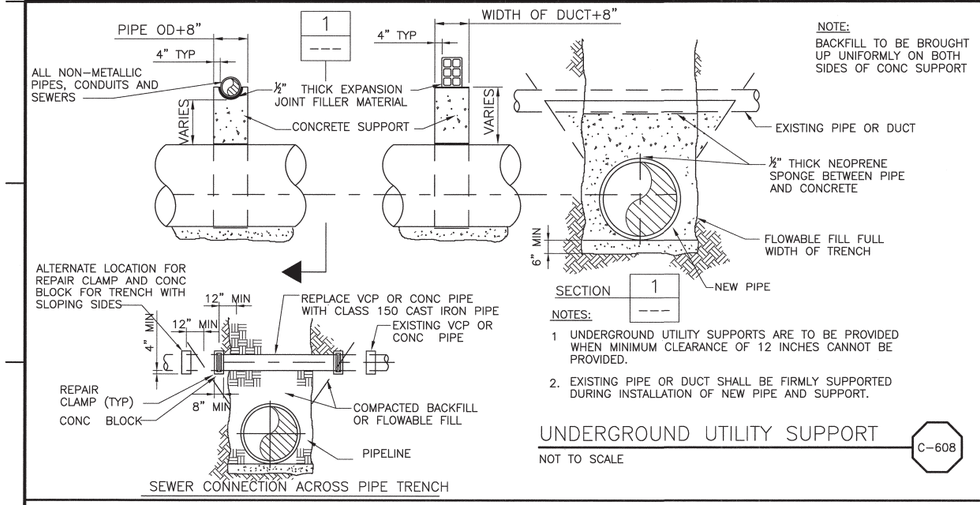

NOTE:
BACKFILL TO BE BROUGHT UP UNIFORMLY ON BOTH SIDES OF CONC SUPPORT

NOTES:
1 UNDERGROUND UTILITY SUPPORTS ARE TO BE PROVIDED WHEN MINIMUM CLEARANCE OF 12 INCHES CANNOT BE PROVIDED.
2. EXISTING PIPE OR DUCT SHALL BE FIRMLY SUPPORTED DURING INSTALLATION OF NEW PIPE AND SUPPORT.

UNDERGROUND UTILITY SUPPORT — C-608

NOT TO SCALE

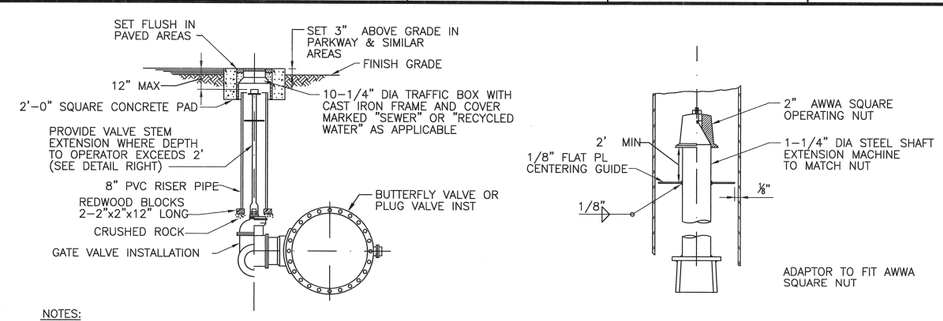

NOTES:
PROVIDE PROTECTIVE COATING TO EXTERIOR SURFACE OF VALVE BODY IN ACCORDANCE WITH SPECS.
FOR LUBRICATED PLUG VALVE, EXTEND LUBRICATION LINE TO GRADE PER MANUFACTURERS INSTRUCTIONS.

BURIED VALVE INSTALLATION — C-640

NOT TO SCALE

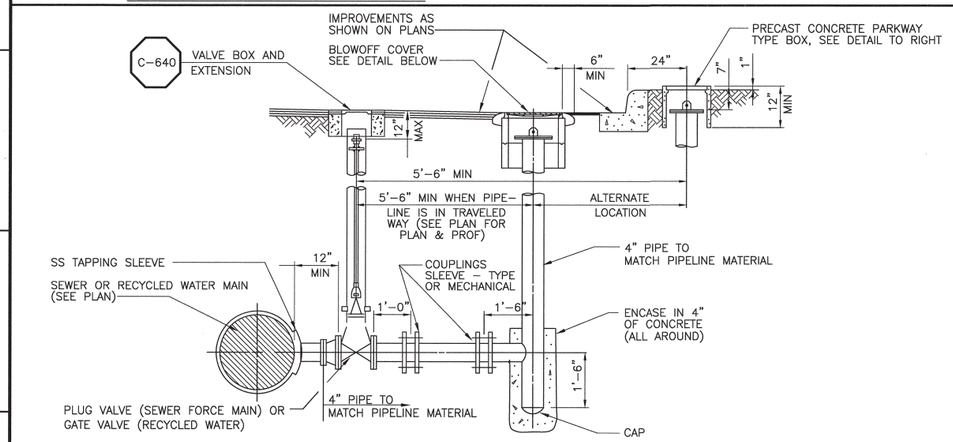

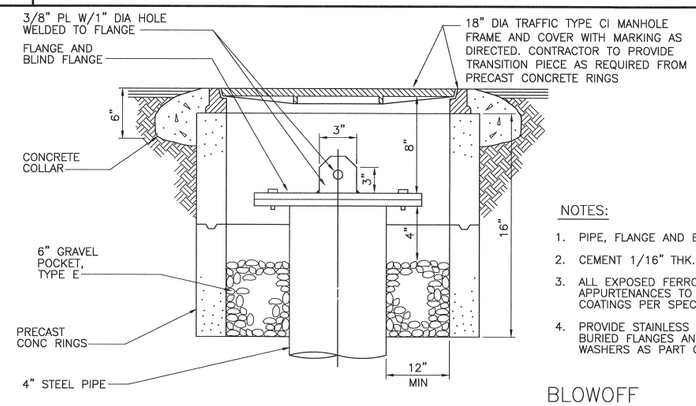

NOTES:
1. PIPE, FLANGE AND BLIND FLANGE SAME CLASS AS PIPELINE.
2. CEMENT 1/16" THK. FULL COVER GASKET TO FLANGE.
3. ALL EXPOSED FERROUS SURFACES OF BURIED PIPE AND APPURTENANCES TO BE PROVIDED WITH PROTECTIVE COATINGS PER SPECIFICATIONS.
4. PROVIDE STAINLESS STEEL NUTS, BOLTS AND WASHERS TO BURIED FLANGES AND COUPLINGS EXCEPT FOR NON-METALLIC WASHERS AS PART OF INSULATING FLANGE SET.

BLOWOFF — C-620

NOT TO SCALE

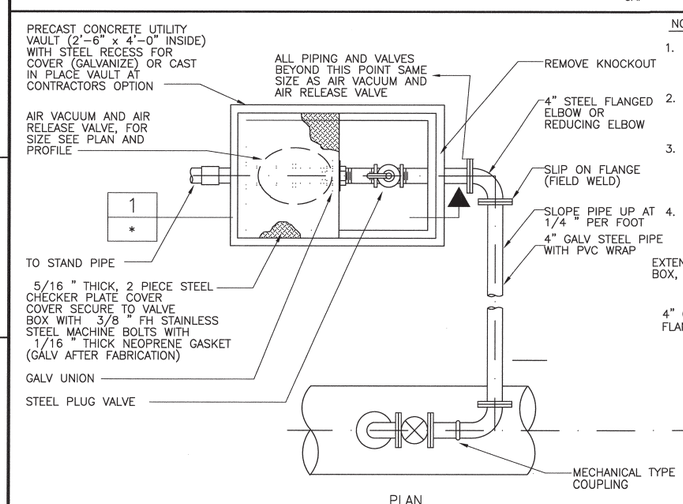

NOTES:
1. THIS ASSEMBLY TO BE USED IN AREAS WHERE MAIN PIPELINE IS TOO SHALLOW TO PERMIT USE OF MANHOLE.
2. ALL FERROUS SURFACES OF PIPE AND APPURTENANCES TO BE PROVIDED WITH PROTECTIVE COATING PER SPECS.
3. PROVIDE STAINLESS STL. NUTS, BOLTS AND WASHERS TO BURIED FLANGES AND COUPLINGS, EXCEPT FOR NONMETALLIC WASHERS TO BE PROVIDED AS PART OF INSULATING FLANGE SET.
4. OMIT STAND PIPE AND ROUTE DISCHARGE PIPE TO PUMP STATION WET WELL AT PUMP STATION SITES.

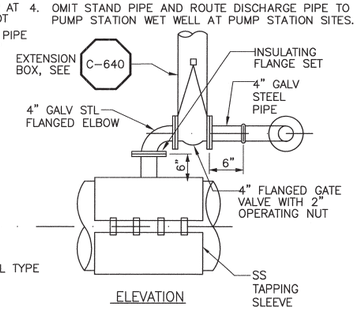

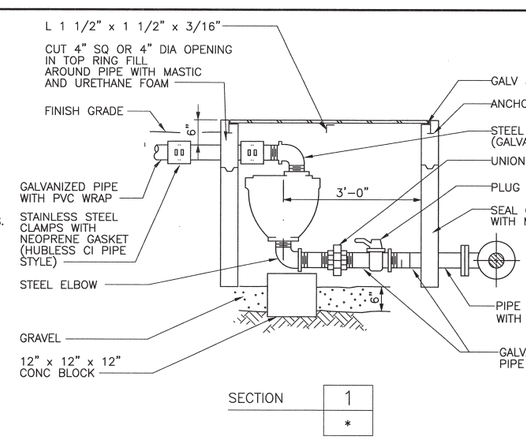

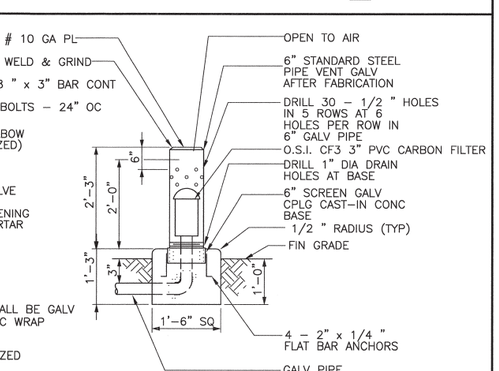

DETAIL OF STANDPIPE ASSEMBLY
SEE NOTE 4

AIR VACUUM AND AIR RELEASE VALVE ASSEMBLY — C-622

(ALSO SEE C-119 SEWAGE COMBINATION AIR/ VACUUM RELEASE VALVE MANHOLE)

REV. NO.	DATE	DRWN	CHKD	REMARKS

DESIGNED BY: BJC
DRAWN BY: JAW
CHECKED BY: MDM
DATE: APRIL, 2012

CDM Smith
2295 Gateway Oaks Drive, Suite 240
Sacramento, CA 95833
Tel: (916) 567-9900

IF THIS BAR DOES NOT MEASURE 1" THEN ADJUST SCALE ACCORDINGLY

DIGALERT DIAL TOLL FREE 1-800-642-2444 AT LEAST TWO DAYS BEFORE YOU DIG
UNDERGROUND SERVICE ALERT OF NORTHERN CALIFORNIA

LOS OSOS WASTEWATER COLLECTION SYSTEM

GENERAL CIVIL STANDARD CIVIL DETAILS - 6

PROJECT NO.42502-83120
FILE NAME: B-GC-065
SHEET NO.
B-GC-065

©2012 CDM SMITH ALL RIGHTS RESERVED.
REUSE OF DOCUMENTS: THESE DOCUMENTS AND DESIGNS PROVIDED BY PROFESSIONAL SERVICE, INCORPORATED HEREIN, ARE THE PROPERTY OF CDM SMITH AND ARE NOT TO BE USED, IN WHOLE OR PART, FOR ANY OTHER PROJECT WITHOUT THE WRITTEN AUTHORIZATION OF CDM SMITH.
S:\Los Osos\Walnut Creek\GC\Area B & C\ B-GC-065 04/02/12 09:53 bullockl XREFS: LosOsos-bdr, CA-BJC, gciv_det

REV. NO.	DATE	DRWN	CHKD	REMARKS

DESIGNED BY: BJC
DRAWN BY: JAW
CHECKED BY: BJC
DATE: APRIL 2012

CDM Smith
2295 Gateway Oaks Drive, Suite 240
Sacramento, CA 95833
Tel: (916) 567-9900

0 1/2 1
IF THIS BAR DOES NOT MEASURE 1" THEN ADJUST SCALE ACCORDINGLY

REGISTERED PROFESSIONAL ENGINEER BRUCE JAMES CORWIN C 051414 Exp. 09/30/12 CIVIL STATE OF CALIFORNIA

DIGALERT
DIAL TOLL FREE 1-800-642-2444 AT LEAST TWO DAYS BEFORE YOU DIG
UNDERGROUND SERVICE ALERT OF NORTHERN CALIFORNIA

LOS OSOS WASTEWATER COLLECTION SYSTEM

CIVIL
AREA B KEY PLAN

PROJECT NO.42502-83120
FILE NAME: B-C-201
SHEET NO.
B-C-201

©2012 CDM SMITH ALL RIGHTS RESERVED.
REUSE OF DOCUMENTS: THESE DOCUMENTS AND DESIGNS PROVIDED BY PROFESSIONAL SERVICE, INCORPORATED HEREIN, ARE THE PROPERTY OF CDM SMITH AND ARE NOT TO BE USED, IN WHOLE OR PART, FOR ANY OTHER PROJECT WITHOUT THE WRITTEN AUTHORIZATION OF CDM SMITH.
N:\ACAD2008\los osos\01-sheets\B\B-CIV\ B-C-201 04/02/12 15:55 weinerjo XREFS: LosOsos-bdr, CA-BJC, loc_mdl

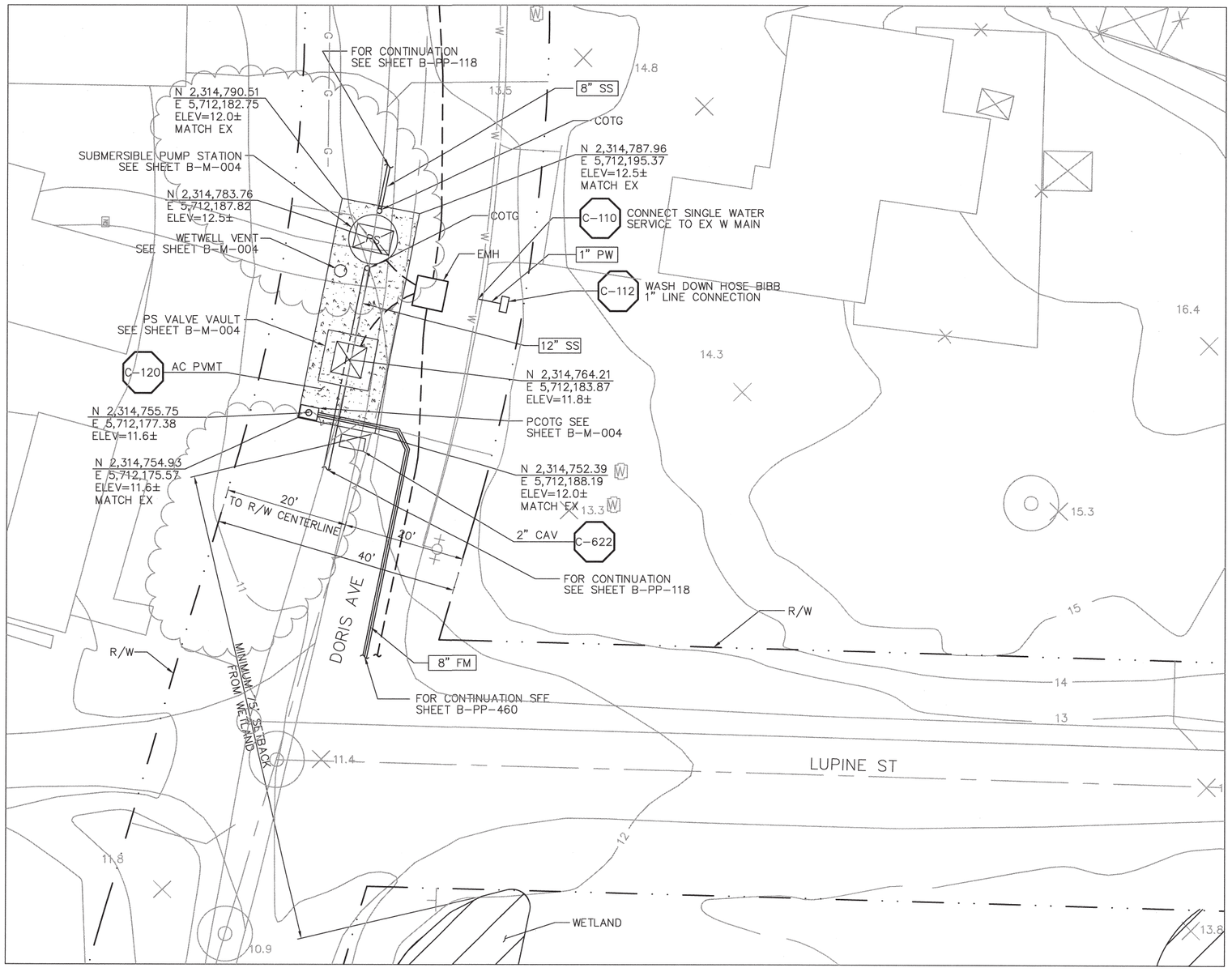

LUPINE PUMP STATION

PLAN

1" = 10'

5 0 10

NOTES:

1. LIDS AND VAULTS TO BE TRAFFIC RATED FOR H-20 LOADING.
2. COORDINATE ELECTRICAL DUCTBANK DEPTH AND LOCATION BEFORE INSTALLATION OF PROCESS PIPING. SEE SHEET B-PP-118.
3. CONTRACTOR SHALL GRADE AROUND PS PAD TO MATCH EXISTING SLOPES.
4. REFER TO SHEET B-C-010 FOR REQUIREMENTS OF ELECTRICAL CONDUIT AND MANHOLES ALONG PIPELINE.

REV. NO.	DATE	DRWN	CHKD	REMARKS

DESIGNED BY: MPH
DRAWN BY: JAW
CHECKED BY: CCA
DATE: APRIL 2012

CDM Smith
2295 Gateway Oaks Drive, Suite 240
Sacramento, CA 95833
Tel: (916) 567-9900

0 1/2 1
IF THIS BAR DOES NOT MEASURE 1" THEN ADJUST SCALE ACCORDINGLY

REGISTERED PROFESSIONAL ENGINEER BRUCE JAMES CORWIN C 051414 Exp. 06/30/12 CIVIL STATE OF CALIFORNIA

DIGALERT
DIAL TOLL FREE 1-800-642-2444 AT LEAST TWO DAYS BEFORE YOU DIG
UNDERGROUND SERVICE ALERT OF NORTHERN CALIFORNIA

LOS OSOS WASTEWATER COLLECTION SYSTEM
CIVIL
LUPINE PUMP STATION
SITE PLAN

PROJECT NO.42502-83120
FILE NAME: B-C-202
SHEET NO.
B-C-202

©2012 CDM SMITH ALL RIGHTS RESERVED.
REUSE OF DOCUMENTS: THESE DOCUMENTS AND DESIGNS PROVIDED BY PROFESSIONAL SERVICE, INCORPORATED HEREIN, ARE THE PROPERTY OF CDM SMITH AND ARE NOT TO BE USED, IN WHOLE OR PART, FOR ANY OTHER PROJECT WITHOUT THE WRITTEN AUTHORIZATION OF CDM SMITH.
N:\ACAD2008\los osos\01-sheets\B\B-CIV\ B-C-202 04/02/12 14:12 weinerja XREFS: x-feat-topo10x, x-feat-row, ax-util-all, loc_mdl, CA-BJC, x-feat-aerl, x-feat-topo-supp, x-feat-aerl-sou, bn-util-ss, LosOsos-bdr, EDA-Exist Util base map, EDA-Pro

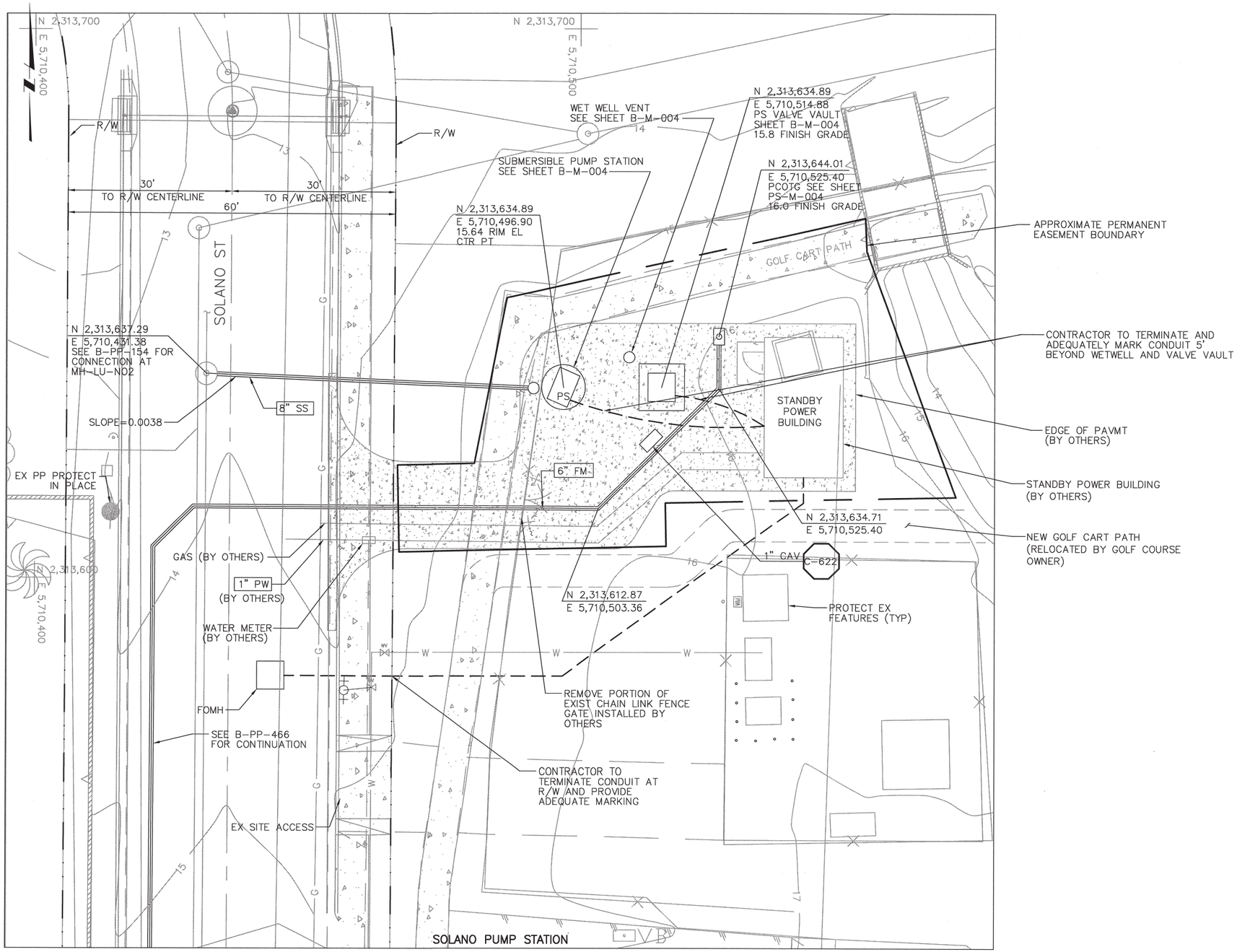

PLAN

1" = 10'

5 0 10

NOTES:

1. LIDS AND VAULTS TO BE TRAFFIC RATED FOR H-20 LOADING
2. COORDINATE ELECTRICAL DUCTBANK DEPTH AND LOCATION BEFORE INSTALLATION OF PROCESS PIPING.
3. REFER TO SHEET B-C-010 FOR REQUIREMENTS OF ELECTRICAL CONDUIT AND MANHOLES ALONG PIPELING.
4. ALL SURFACE IMPROVEMENTS SHOWN HERE NOT ASSOCIATED WITH BURIED PUMP STATION AND VALVE VAULT (AND NOT SHOWN ON B-M-004) ARE TO BE CONSTRUCTED BY OTHERS AND ARE ONLY SHOWN FOR REFERENCE.

REV. NO.	DATE	DRWN	CHKD	REMARKS

DESIGNED BY: MPH
DRAWN BY: JAW
CHECKED BY: CCA
DATE: APRIL 2012

CDM Smith
2295 Gateway Oaks Drive, Suite 240
Sacramento, CA 95833
Tel: (916) 567-9900

IF THIS BAR DOES NOT MEASURE 1" THEN ADJUST SCALE ACCORDINGLY

REGISTERED PROFESSIONAL ENGINEER BRUCE JAMES CORWIN C 051414 Exp. 06/30/12 CIVIL STATE OF CALIFORNIA

DIGALERT
DIAL TOLL FREE
1-800-642-2444
AT LEAST TWO DAYS BEFORE YOU DIG
UNDERGROUND SERVICE ALERT OF NORTHERN CALIFORNIA

LOS OSOS WASTEWATER COLLECTION SYSTEM

CIVIL
SOLANO PS & STANDBY POWER SITE PLAN

PROJECT NO.42502-83120
FILE NAME: B-C-203
SHEET NO.
B-C-203

©2012 CDM SMITH ALL RIGHTS RESERVED.
REUSE OF DOCUMENTS: THESE DOCUMENTS AND DESIGNS PROVIDED BY PROFESSIONAL SERVICE, INCORPORATED HEREIN, ARE THE PROPERTY OF CDM SMITH AND ARE NOT TO BE USED, IN WHOLE OR PART, FOR ANY OTHER PROJECT WITHOUT THE WRITTEN AUTHORIZATION OF CDM SMITH.
N:\ACAD2008\los osos\01-sheets\B\B-CIV\ B-C-203 04/02/12 16:38 weinerja XREFS: x-feat-topo\0x, x-feat-row, ax-util-all, loc_mdl, LosOsos-bdr, CA-BJC, x-feat-aerl, x-feat-topo-supp, x-feat-aerl-sou, 22650000 Solano Lift, bn-util-ss, EDA-Exis

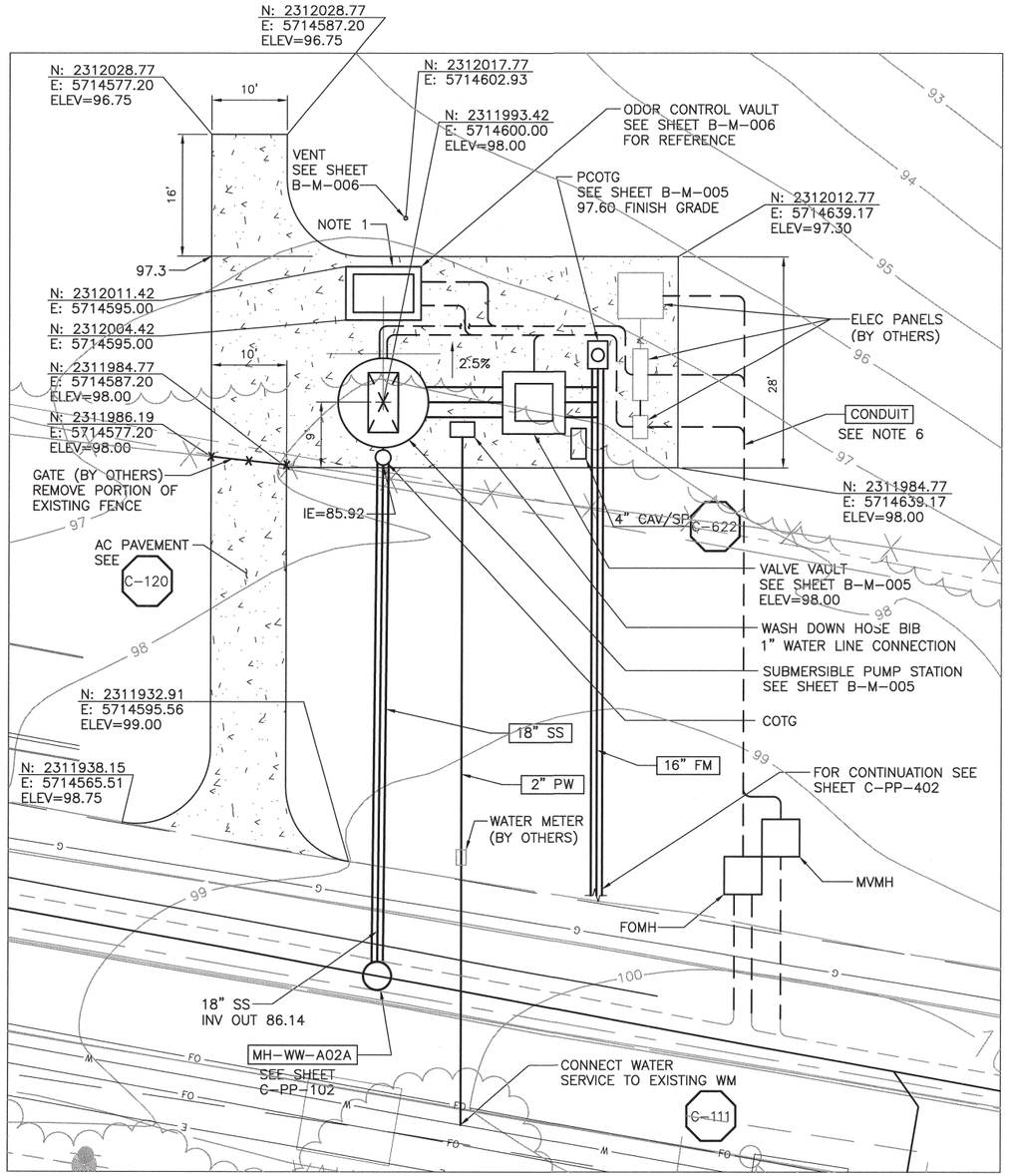

MID-TOWN PS

PLAN

1" = 10'

5 0 10

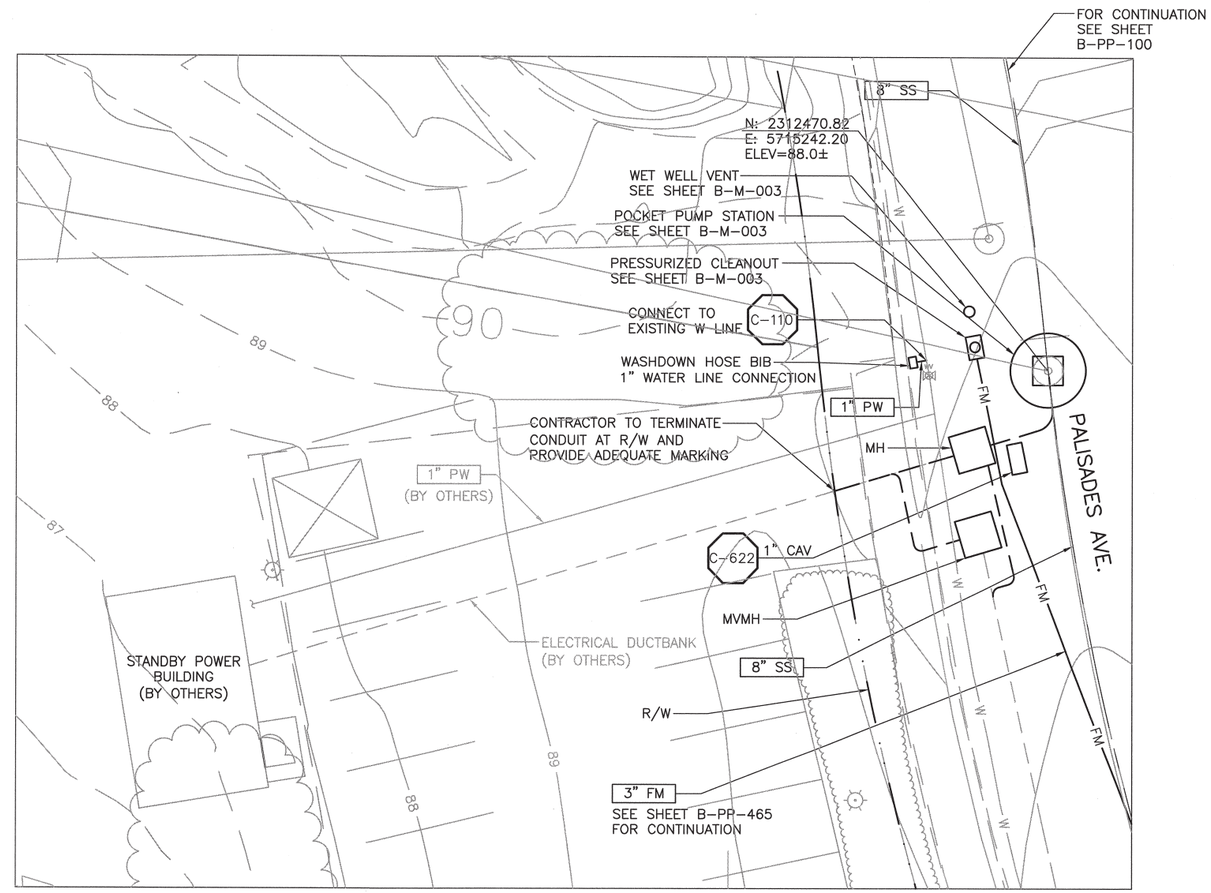

STANDBY POWER & 5A POCKET PUMP STATION PLAN

PLAN

1" = 10'

5 0 10

NOTES:

1. LIDS AND VAULTS TO BE TRAFFIC RATED FOR H-20 LOADING.
2. COORDINATE ELECTRICAL DUCTBANK DEPTH AND LOCATION BEFORE INSTALLATION OF PROCESS PIPING. SEE SHEET B-E-206.
3. CONTRACTOR SHALL GRADE UP TO AC PAVEMENT.
4. ALL SURFACE IMPROVEMENTS SHOWN HERE NOT ASSOCIATED WITH BURIED PUMP STATION AND VALVE VAULT (AND NOT SHOWN ON B-M-004) ARE TO BE CONSTRUCTED BY OTHERS AND ARE ONLY SHOWN FOR REFERENCE.
5. FORCEMAIN TO HAVE RESTRAINED JOINTS.
6. REFER TO SHEET C-G-010 FOR REQUIREMENTS OF ELECTRICAL CONDUITS AND MANHOLES ALONG PIPELINE.

REV. NO.	DATE	DRWN	CHKD	REMARKS

DESIGNED BY: MPH
DRAWN BY: JAW
CHECKED BY: CCA
DATE: APRIL 2012

CDM Smith
2295 Gateway Oaks Drive, Suite 240
Sacramento, CA 95833
Tel: (916) 567-9900

0 1/2 1
IF THIS BAR DOES NOT MEASURE 1" THEN ADJUST SCALE ACCORDINGLY

REGISTERED PROFESSIONAL ENGINEER BRUCE JAMES COWIN C 051414 Exp. 06/30/12 CIVIL STATE OF CALIFORNIA

DIGALERT
DIAL TOLL FREE
1-800-642-2444
AT LEAST TWO DAYS BEFORE YOU DIG
UNDERGROUND SERVICE ALERT OF NORTHERN CALIFORNIA

LOS OSOS WASTEWATER COLLECTION SYSTEM

MID-TOWN PS & PPS 5A SITE PLAN

PROJECT NO.42502-83120
FILE NAME: B-C-204
SHEET NO.
B-C-204

©2012 CDM SMITH ALL RIGHTS RESERVED.
REUSE OF DOCUMENTS AND DESIGNS PROVIDED BY PROFESSIONAL SERVICE INCORPORATED HEREIN, ARE THE PROPERTY OF CDM SMITH, AND ARE NOT TO BE USED, IN WHOLE OR PART, FOR ANY OTHER PROJECT WITHOUT THE WRITTEN AUTHORIZATION OF CDM SMITH.
N:\ACAD2008\los osos\01-sheets\B\B-CN\ B-C-204 04/02/12 15:48 weinerjo XREFS: N-FEAT-CNBL, X-FEAT-ADDR, X-FEAT-APN, X-FEAT-GOED, X-FEAT-ROW, autocad_bar, N-UTIL-SS, X-FEAT-AERL, X-FEAT-TOPO, X-UTIL-FIBR, X-UTIL-GAS, X-UTIL-SS, X-