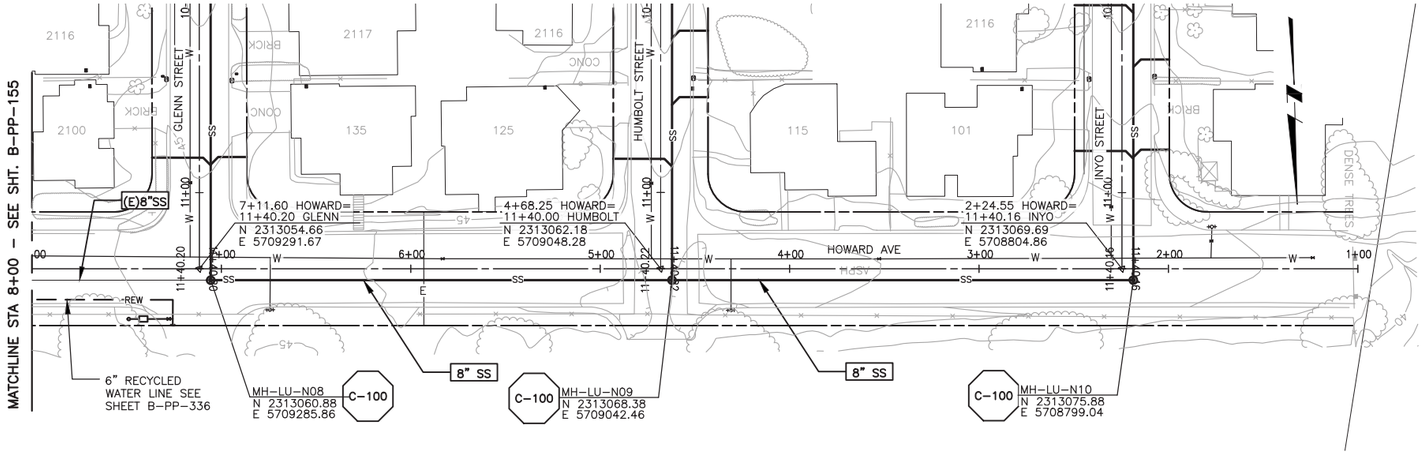

PLAN ON HOWARD AVENUE

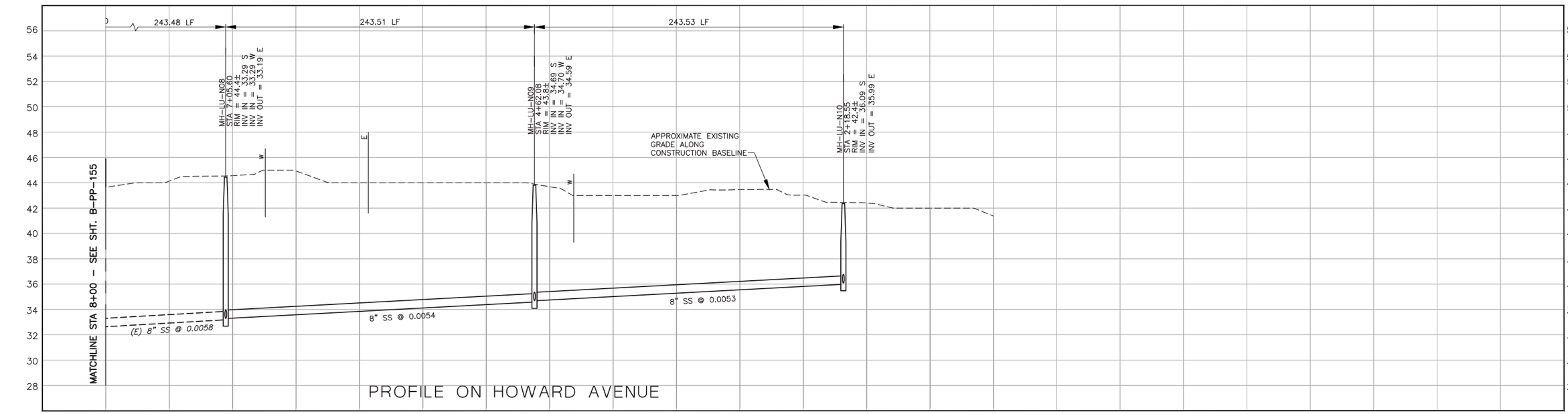

PROFILE ON HOWARD AVENUE

NOTES:

1.
2.
3.

SCALE:
HORZ: 1"=40'
VERT: 1"=4'

REV. NO.	DATE	DRWN	CHKD	REMARKS

DESIGNED BY: DCS/DJN
DRAWN BY: DCS
CHECKED BY: JPW
DATE: APRIL 2012

CDM Smith
2295 Gateway Oaks Drive, Suite 240
Sacramento, CA 95833
Tel: (916) 567-9900

0 1/2 1
IF THIS BAR DOES NOT MEASURE 1" THEN ADJUST SCALE ACCORDINGLY

REGISTERED PROFESSIONAL ENGINEER
JEFFREY P. WEAVER
Lic. No. 26,431
Expires 3/31/14
CIVIL
STATE OF CALIFORNIA

eda design professionals
civil engineers • land surveyors • land planners
1998 santa barbara st • san luis obispo, ca 93401
ph: 805/549-8658 • email: eda@edainc.com

DIGALERT
DIAL TOLL FREE
1-800-642-2444
AT LEAST TWO DAYS BEFORE YOU DIG
UNDERGROUND SERVICE ALERT OF NORTHERN CALIFORNIA

LOS OSOS WASTEWATER COLLECTION SYSTEM

PLAN AND PROFILE
HOWARD AVENUE
STA 2+15 TO STA 8+00

PROJECT NO.42502-83120
FILE NAME: B-PP-156
SHEET NO.
B-PP-156

K:\22650700 lo sewer cdm\3-civil drawings\3a-Sheets\Con Docs\B-PP-156.dwg 4/02/12 02:58 PM daniels

SEE SHEET B-PP-158 FOR CONTINUATION

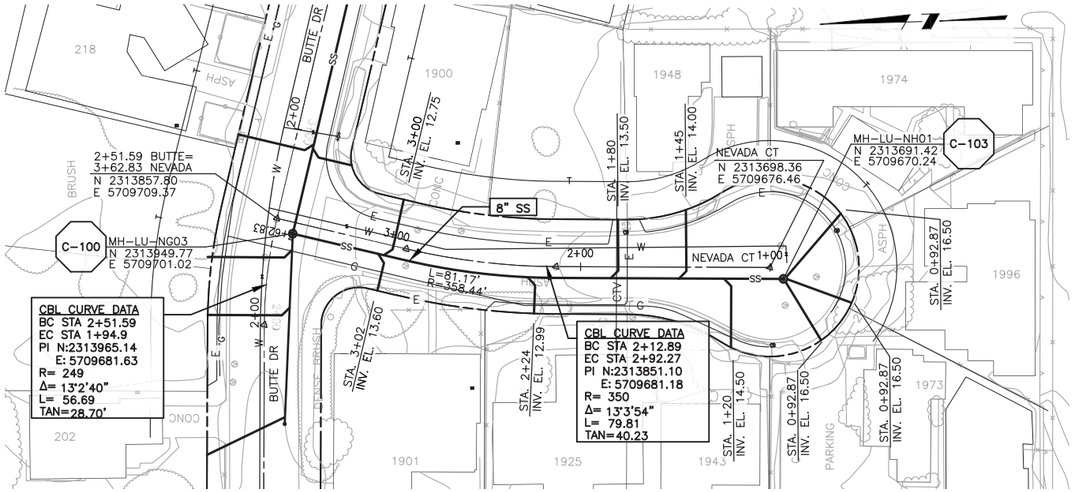

PLAN ON NEVADA COURT

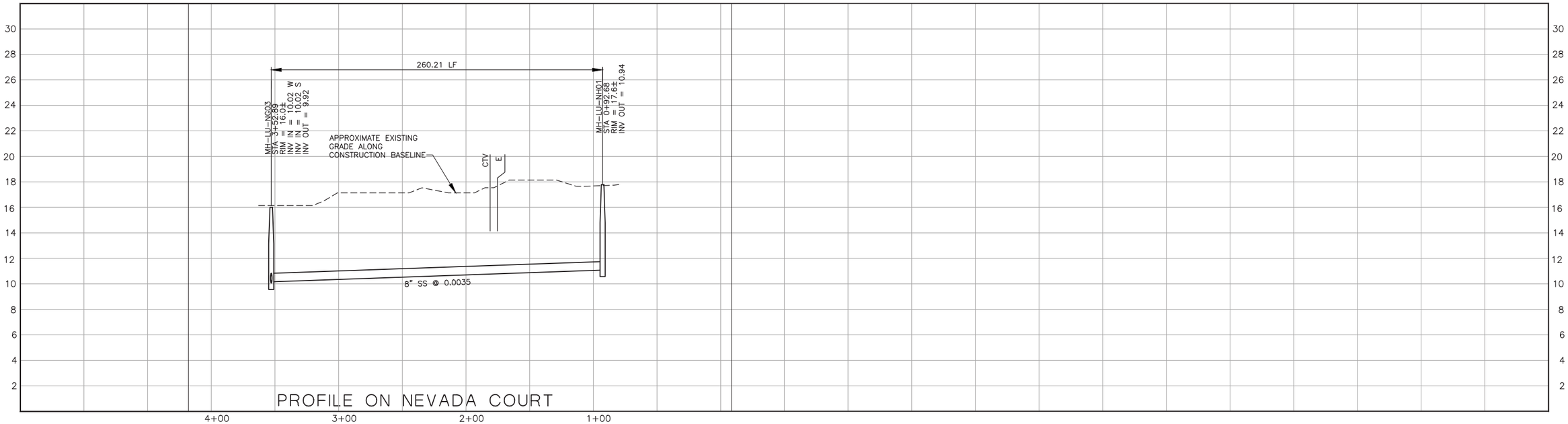

PROFILE ON NEVADA COURT

CONSTRUCTION
BASELINE
STATION

NOTES:

1.
2.
3.

SCALE:
HORZ: 1"=40'
VERT: 1"=4'

REV. NO.	DATE	DRWN	CHKD	REMARKS

DESIGNED BY: DCS/DJN
DRAWN BY: DCS
CHECKED BY: JPW
DATE: APRIL 2012

CDM Smith
2295 Gateway Oaks Drive, Suite 240
Sacramento, CA 95833
Tel: (916) 567-9900

0 1/2 1
IF THIS BAR DOES NOT MEASURE 1" THEN ADJUST SCALE ACCORDINGLY

REGISTERED PROFESSIONAL ENGINEER
JEFFREY P. WAGNER
Lic. No. 26,431
Expires 3/31/14
STATE OF CALIFORNIA

eda design professionals
civil engineers • land surveyors • land planners
1998 santa barbara st • san luis obispo, ca 93401
ph: 805/549-8658 • email: eda@edainc.com

DIGALERT
DIAL TOLL FREE
1-800-642-2444
AT LEAST TWO DAYS BEFORE YOU DIG
UNDERGROUND SERVICE ALERT OF NORTHERN CALIFORNIA

LOS OSOS WASTEWATER COLLECTION SYSTEM

PLAN AND PROFILE
NEVADA COURT
STA 0+90 TO STA 3+60

PROJECT NO.42502-83120
FILE NAME: B-PP-157

SHEET NO.
B-PP-157

K:\22650700 lo sewer cdm\3-civil drawings\3-Sheets\Con Docs\B-PP-157.dwg 4/02/12 02:59 PM daniels

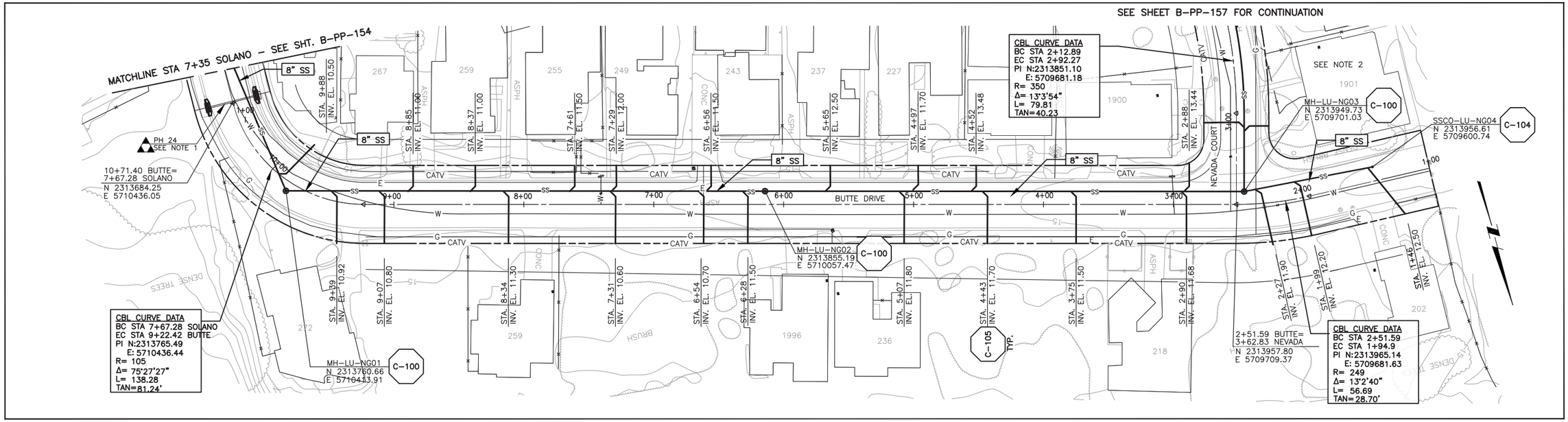

PLAN ON BUTTE DRIVE

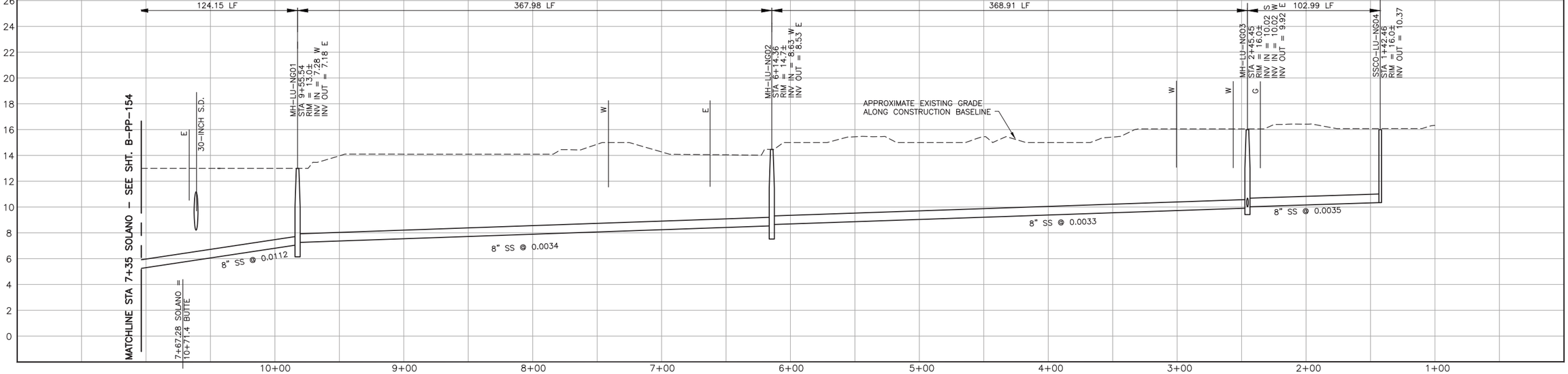

PROFILE ON BUTTE DRIVE

NOTES:

1. 30" STORM DRAIN
2. 1901 BUTTE DRIVE SERVED ON NEVADA COURT
3.

SCALE:
HORZ: 1"=40'
VERT: 1"=4'

REV. NO.	DATE	DRWN	CHKD	REMARKS

DESIGNED BY: DCS/DJN
DRAWN BY: DCS
CHECKED BY: JPW
DATE: APRIL 2012

CDM Smith
2295 Gateway Oaks Drive, Suite 240
Sacramento, CA 95833
Tel: (916) 567-9900

0 1/2 1
IF THIS BAR DOES NOT MEASURE 1" THEN ADJUST SCALE ACCORDINGLY

REGISTERED PROFESSIONAL ENGINEER
JEFFREY P. WARNER
Lic: No. 26,431
Expires 3/31/14
CIVIL
STATE OF CALIFORNIA

eda design professionals
civil engineers • land surveyors • land planners
1998 santa barbara st • san luis obispo, ca 93401
ph: 805/549-8658 • email: eda@edainc.com

DIGALERT
DIAL TOLL FREE
1-800-642-2444
AT LEAST TWO DAYS BEFORE YOU DIG
UNDERGROUND SERVICE ALERT OF NORTHERN CALIFORNIA

LOS OSOS WASTEWATER COLLECTION SYSTEM

PLAN AND PROFILE
BUTTE DRIVE
STA 1+00 TO STA 10+70

PROJECT NO.42502-83120
FILE NAME: B-PP-158
SHEET NO.
B-PP-158

K:\22650700 lo sewer cdm\3-civil drawings\3a-Sheets\Con Docs\B-PP-158.dwg 4/02/12 03:00 PM daniels

SEE SHEET B-PP-156 FOR CONTINUATION

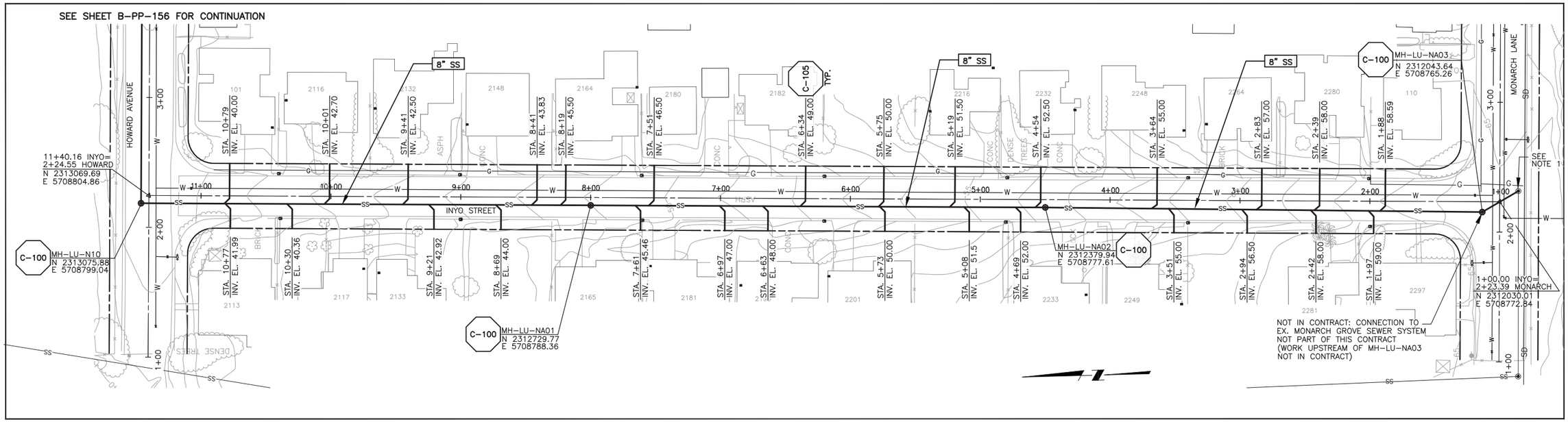

PLAN ON INYO STREET

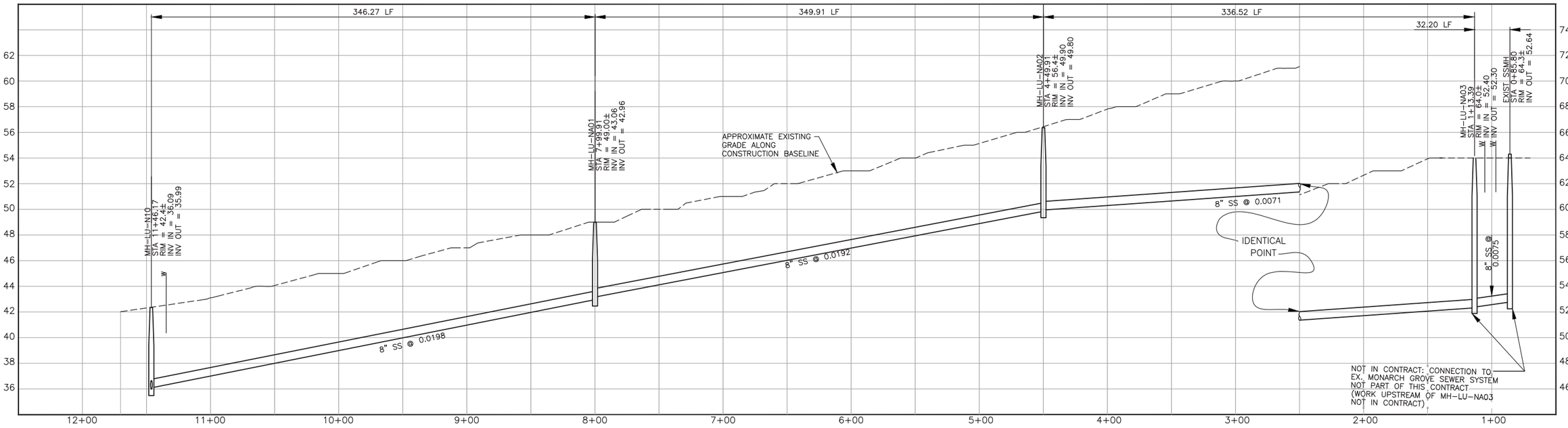

PROFILE ON INYO STREET

NOTES:

1. NOT IN CONTRACT: CONTRACTOR MUST OBTAIN PERMISSION AND APPROVAL FROM LOCSD PRIOR TO CONNECTION TO EXIST. MANHOLE
2.
3.

SCALE:
HORZ: 1"=40'
VERT: 1"=4'

REV. NO.	DATE	DRWN	CHKD	REMARKS

DESIGNED BY: DCS/DJN
DRAWN BY: DCS
CHECKED BY: JPW
DATE: APRIL 2012

CDM Smith
2295 Gateway Oaks Drive, Suite 240
Sacramento, CA 95833
Tel: (916) 567-9900

0 1/2 1
IF THIS BAR DOES NOT MEASURE 1" THEN ADJUST SCALE ACCORDINGLY

REGISTERED PROFESSIONAL ENGINEER JEFFREY P. WEAVER Lic. No. 26,431 Expires 3/31/14 CIVIL STATE OF CALIFORNIA

eda design professionals
civil engineers • land surveyors • land planners
1998 santa barbara st • san luis obispo, ca 93401
ph: 805/549-8658 • email: eda@edainc.com

DIG ALERT
DIAL TOLL FREE
1-800-642-2444
AT LEAST TWO DAYS BEFORE YOU DIG
UNDERGROUND SERVICE ALERT OF NORTHERN CALIFORNIA

LOS OSOS WASTEWATER COLLECTION SYSTEM

PLAN AND PROFILE
INYO STREET
STA 0+85 TO STA 11+50

PROJECT NO. 42502-83120
FILE NAME: B-PP-159
SHEET NO.
B-PP-159

K:\22650700 lo sewer cdm\3-civil drawings\3-Sheets\Con Docs\B-PP-159.dwg 4/02/12 03:01 PM daniels

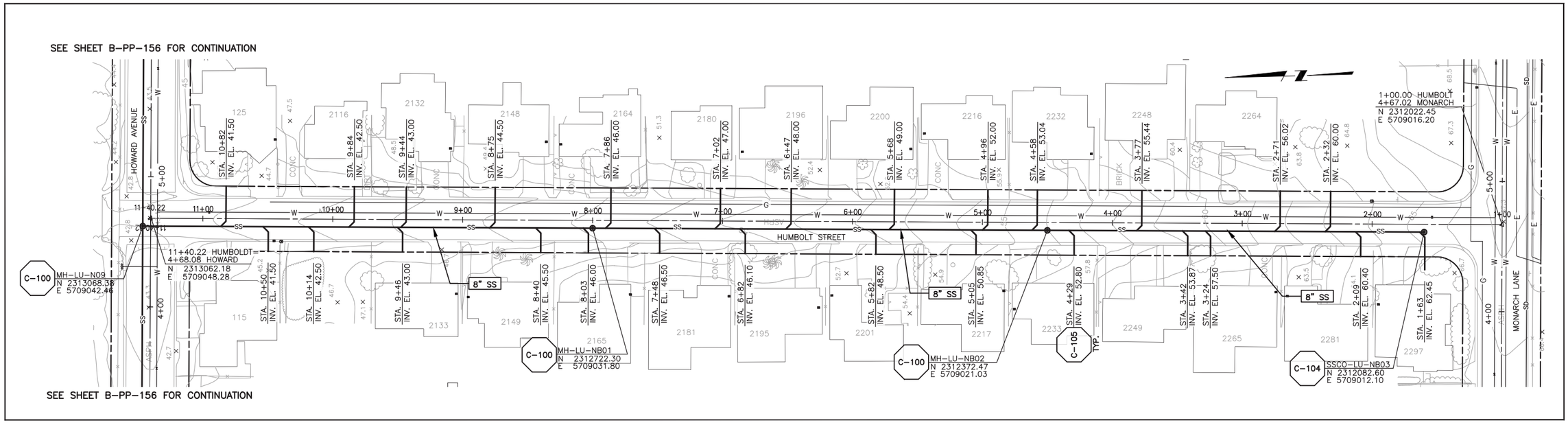

PLAN ON HUMBOLT STREET

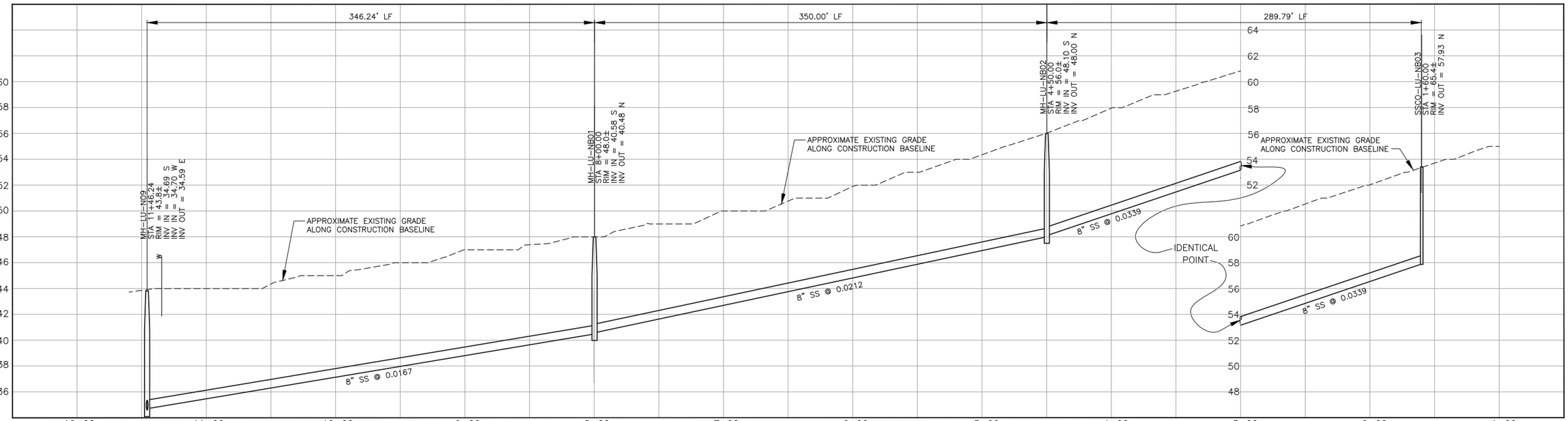

PROFILE ON HUMBOLT STREET

NOTES:

1.
2.
3.

SCALE:
HORZ: 1"=40'
VERT: 1"=4'

REV. NO.	DATE	DRWN	CHKD	REMARKS

DESIGNED BY: DCS/DJN
DRAWN BY: DCS
CHECKED BY: JPW
DATE: APRIL 2012

CDM Smith
2295 Gateway Oaks Drive, Suite 240
Sacramento, CA 95833
Tel: (916) 567-9900

IF THIS BAR DOES NOT MEASURE 1" THEN ADJUST SCALE ACCORDINGLY

REGISTERED PROFESSIONAL ENGINEER JEFFREY P. WARNER Lic: No. 26,431 Expires 3/31/14 STATE OF CALIFORNIA

eda design professionals
civil engineers • land surveyors • land planners
1998 santa barbara st • san luis obispo, ca 93401
ph: 805/549-8658 • email: eda@edainc.com

DIGALERT
DIAL TOLL FREE
1-800-642-2444
AT LEAST TWO DAYS BEFORE YOU DIG
UNDERGROUND SERVICE ALERT OF NORTHERN CALIFORNIA

LOS OSOS WASTEWATER COLLECTION SYSTEM

PLAN AND PROFILE
HUMBOLT STREET
STA 1+60 TO STA 11+50

PROJECT NO.42502-83120
FILE NAME: B-PP-160
SHEET NO.
B-PP-160

K:\22650700 lo sewer cdm\3-civil drawings\3a-Sheets\Con Docs\B-PP-160.dwg 4/02/12 03:02 PM daniels

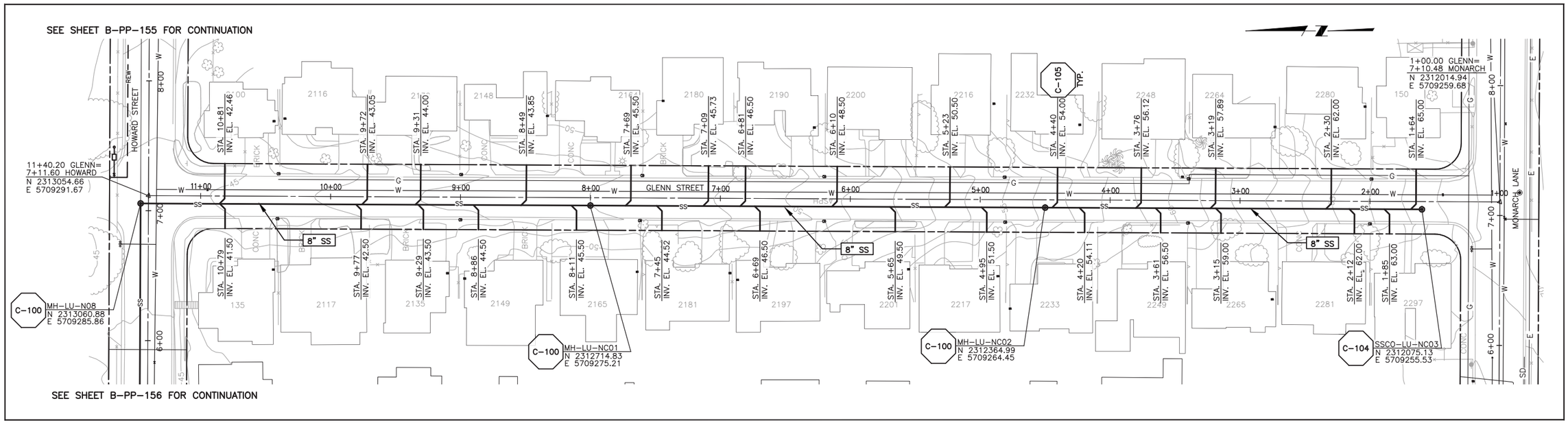

PLAN ON GLENN STREET

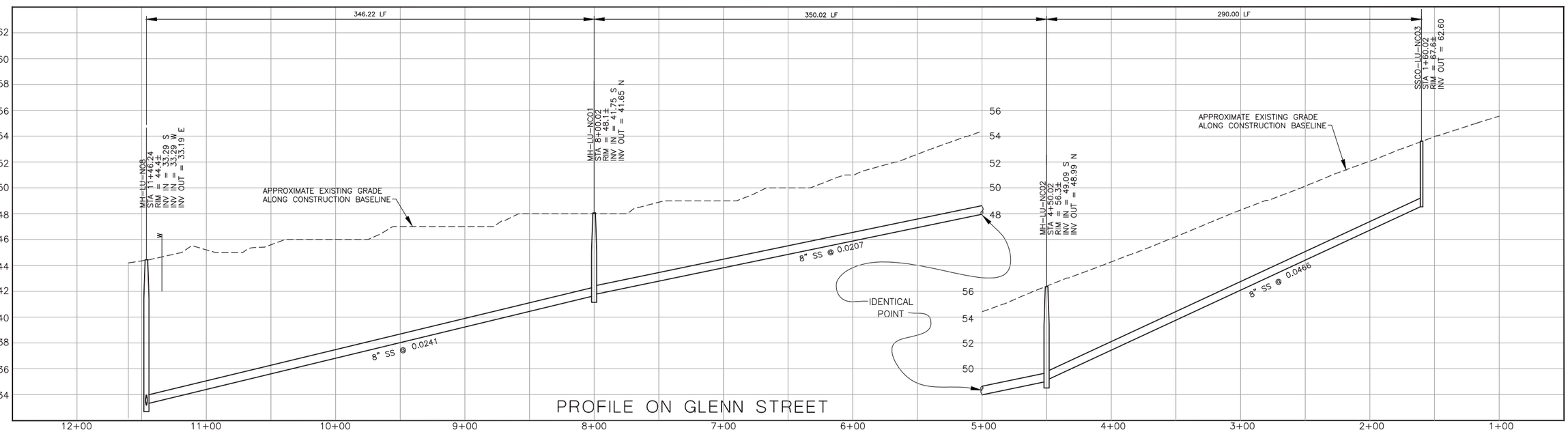

PROFILE ON GLENN STREET

NOTES:

1.
2.
3.

SCALE:
HORZ: 1"=40'
VERT: 1"=4'

REV. NO.	DATE	DRWN	CHKD	REMARKS

DESIGNED BY: DCS/DJN
DRAWN BY: DCS
CHECKED BY: JPW
DATE: APRIL 2012

CDM Smith
2295 Gateway Oaks Drive, Suite 240
Sacramento, CA 95833
Tel: (916) 567-9900

IF THIS BAR DOES NOT MEASURE 1" THEN ADJUST SCALE ACCORDINGLY

REGISTERED PROFESSIONAL ENGINEER
JEFFREY P. WEAVER
Lic: No. 26,431
Expires 3/31/14

eda design professionals
civil engineers • land surveyors • land planners
1998 santa barbara st • san luis obispo, ca 93401
ph: 805/549-8658 • email: eda@edainc.com

DIGALERT
DIAL TOLL FREE
1-800-642-2444
AT LEAST TWO DAYS BEFORE YOU DIG
UNDERGROUND SERVICE ALERT OF NORTHERN CALIFORNIA

LOS OSOS WASTEWATER COLLECTION SYSTEM

PLAN AND PROFILE
GLENN STREET
STA 1+60 TO STA 11+50

PROJECT NO.42502-83120
FILE NAME: B-PP-161
SHEET NO.
B-PP-161

K:\22650700 lo sewer cdm\3-civil drawings\3a-Sheets\Con Docs\B-PP-161.dwg 4/02/12 03:36 PM daniels

SEE SHEET B-PP-155 FOR CONTINUATION

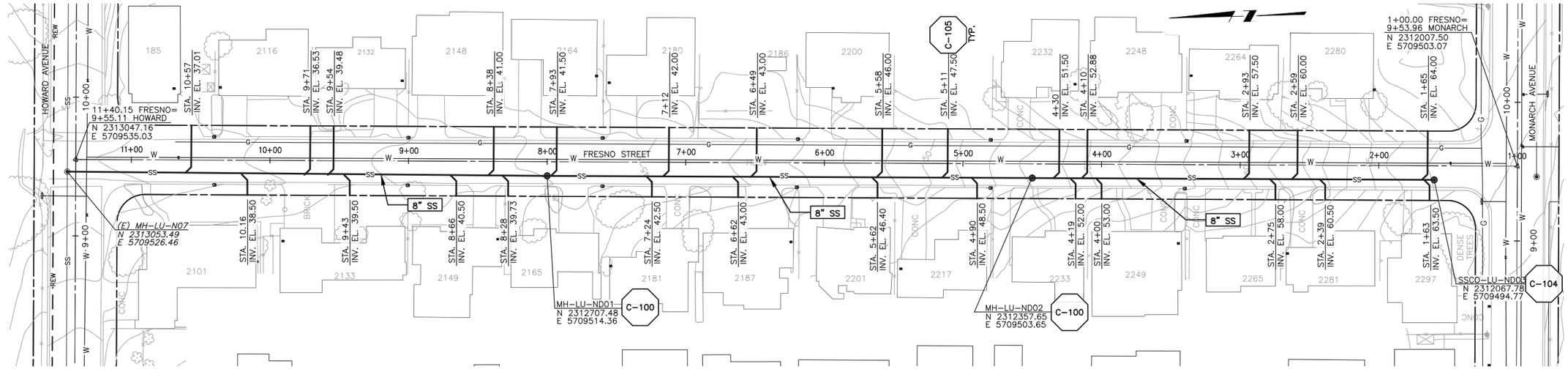

SEE SHEET B-PP-155 FOR CONTINUATION

PLAN ON FRESNO STREET

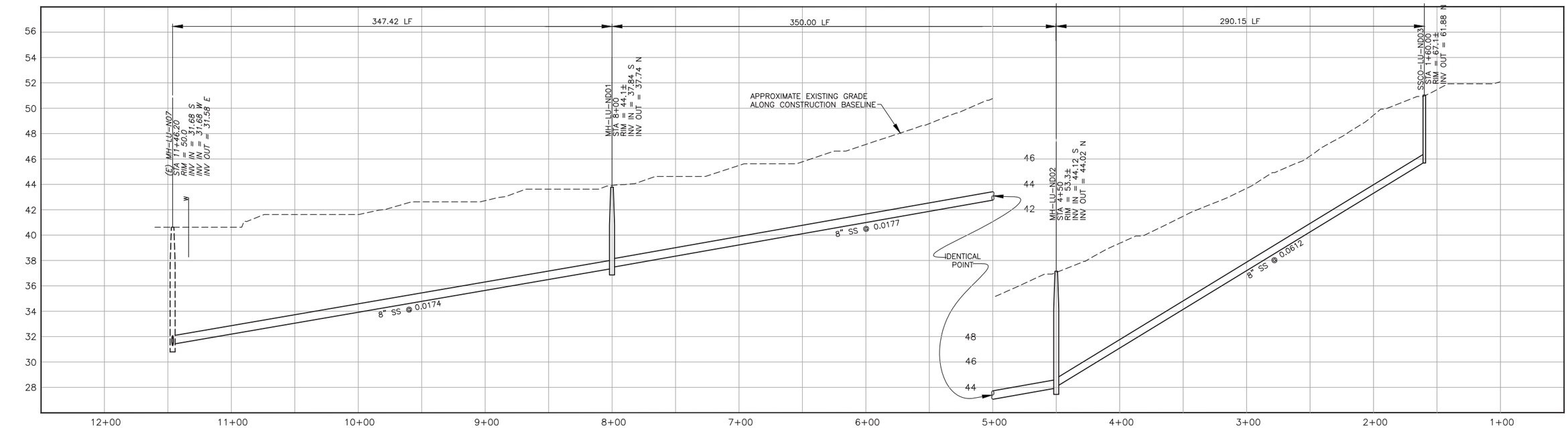

PROFILE ON FRESNO STREET

NOTES:

1.
2.
3.

SCALE:
HORZ: 1"=40'
VERT: 1"=4'

REV. NO.	DATE	DRWN	CHKD	REMARKS

DESIGNED BY: DCS/DJN
DRAWN BY: DCS
CHECKED BY: JPW
DATE: APRIL 2012

CDM Smith
2295 Gateway Oaks Drive, Suite 240
Sacramento, CA 95833
Tel: (916) 567-9900

0 1/2 1
IF THIS BAR DOES NOT MEASURE 1" THEN ADJUST SCALE ACCORDINGLY

REGISTERED PROFESSIONAL ENGINEER
JEFFREY P. WARNER
Lic. No. 26,431
Expires 3/31/14
STATE OF CALIFORNIA

eda design professionals
civil engineers • land surveyors • land planners
1998 santa barbara st • san luis obispo, ca 93401
ph: 805/549-8658 • email: eda@edainc.com

DIGALERT
DIAL TOLL FREE
1-800-642-2444
AT LEAST TWO DAYS BEFORE YOU DIG
UNDERGROUND SERVICE ALERT OF NORTHERN CALIFORNIA

LOS OSOS WASTEWATER COLLECTION SYSTEM

PLAN AND PROFILE
FRESNO STREET
STA 1+60 TO STA 11+50

PROJECT NO.42502-83120
FILE NAME: B-PP-162
SHEET NO.
B-PP-162

K:\22650700 lo sewer cdm\3-civil drawings\3a-Sheets\Con Docs\B-PP-162.dwg 4/02/12 03:37 PM daniels

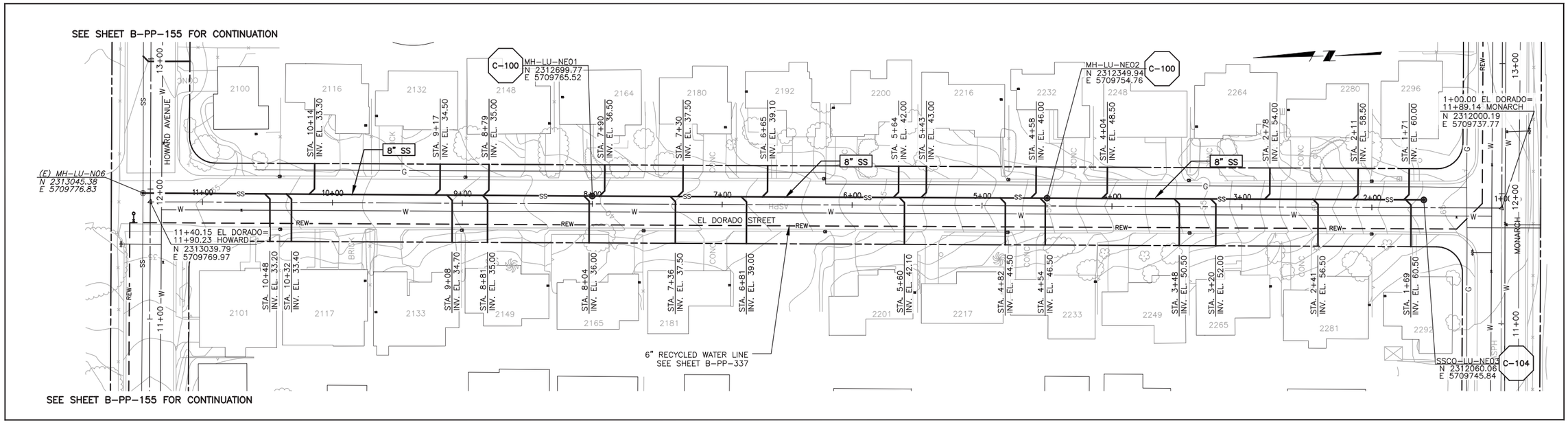

PLAN ON EL DORADO STREET

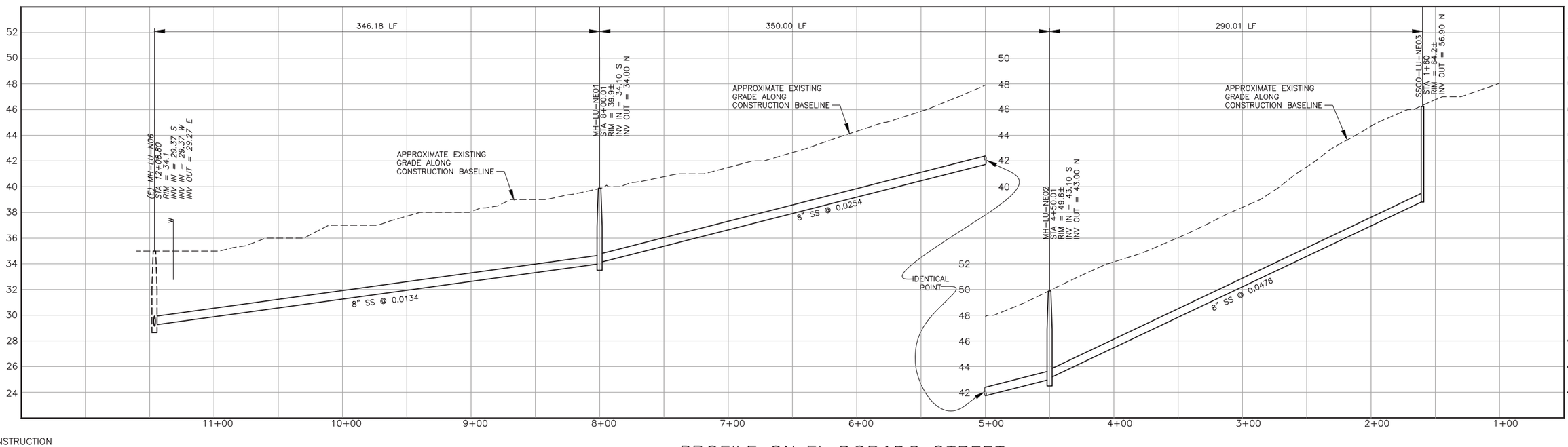

PROFILE ON EL DORADO STREET

NOTES:

1.
2.
3.

SCALE:
HORZ: 1"=40'
VERT: 1"=4'

REV. NO.	DATE	DRWN	CHKD	REMARKS

DESIGNED BY: DCS/DJN
DRAWN BY: DCS
CHECKED BY: JPW
DATE: APRIL 2012

CDM Smith
2295 Gateway Oaks Drive, Suite 240
Sacramento, CA 95833
Tel: (916) 567-9900

0 1/2 1
IF THIS BAR DOES NOT MEASURE 1" THEN ADJUST SCALE ACCORDINGLY

REGISTERED PROFESSIONAL ENGINEER JEFFREY P. WORKER Lic. No. 26,431 Expires 3/31/14 STATE OF CALIFORNIA

eda design professionals
civil engineers • land surveyors • land planners
1998 santa barbara st • san luis obispo, ca 93401
ph: 805/549-8658 • email: eda@edainc.com

DIGALERT
DIAL TOLL FREE
1-800-642-2444
AT LEAST TWO DAYS BEFORE YOU DIG
UNDERGROUND SERVICE ALERT OF NORTHERN CALIFORNIA

LOS OSOS WASTEWATER COLLECTION SYSTEM

PLAN AND PROFILE
EL DORADO STREET
STA 1+60 TO STA 11+50

PROJECT NO.42502-83120
FILE NAME: B-PP-163

SHEET NO.
B-PP-163

K:\22650700 lo sewer cdm\3-civil drawings\3-Sheets\Con Docs\B-PP-163.dwg 4/02/12 03:38 PM daniels

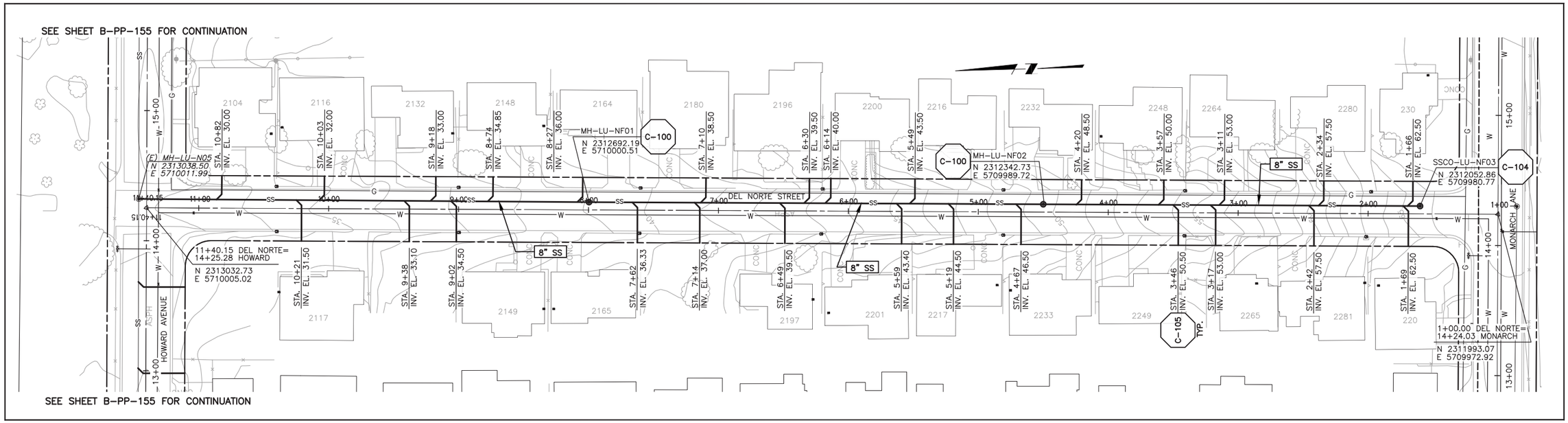

PLAN ON DEL NORTE STREET

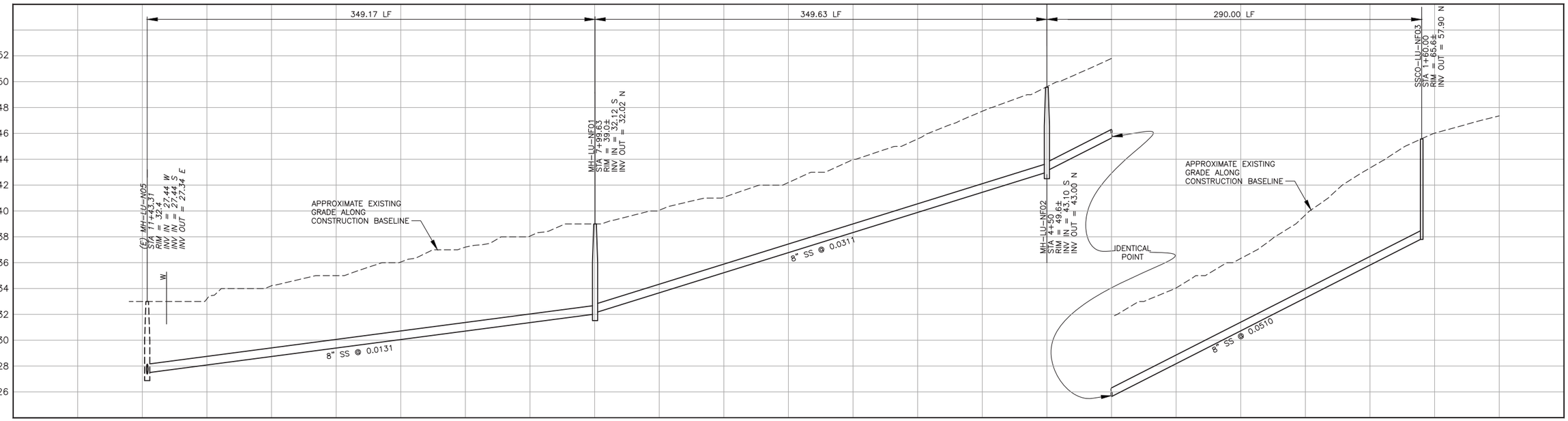

PROFILE ON DEL NORTE STREET

NOTES:

1.
2.
3.

SCALE:
HORZ: 1"=40'
VERT: 1"=4'

REV. NO.	DATE	DRWN	CHKD	REMARKS

DESIGNED BY: DCS/DJN
DRAWN BY: DCS
CHECKED BY: JPW
DATE: APRIL 2012

CDM Smith
2295 Gateway Oaks Drive, Suite 240
Sacramento, CA 95833
Tel: (916) 567-9900

0 1/2 1
IF THIS BAR DOES NOT MEASURE 1" THEN ADJUST SCALE ACCORDINGLY

REGISTERED PROFESSIONAL ENGINEER
JEFFREY P. WAGNER
Lic. No. 26,431
Expires 3/31/14
CIVIL
STATE OF CALIFORNIA

eda design professionals
civil engineers • land surveyors • land planners
1998 santa barbara st • san luis obispo, ca 93401
ph: 805/549-8658 • email: eda@edainc.com

DIGALERT
DIAL TOLL FREE
1-800-642-2444
AT LEAST TWO DAYS BEFORE YOU DIG
UNDERGROUND SERVICE ALERT OF NORTHERN CALIFORNIA

LOS OSOS WASTEWATER COLLECTION SYSTEM

PLAN AND PROFILE
DEL NORTE STREET
STA 1+60 TO STA 11+45

PROJECT NO.42502-83120
FILE NAME: B-PP-164
SHEET NO.
B-PP-164

K:\22650700 lo sewer cdm\3-civil drawings\3a-Sheets\Con Docs\B-PP-164.dwg 4/02/12 03:38 PM daniels

SEE SHEET B-PP-106 FOR CONTINUATION

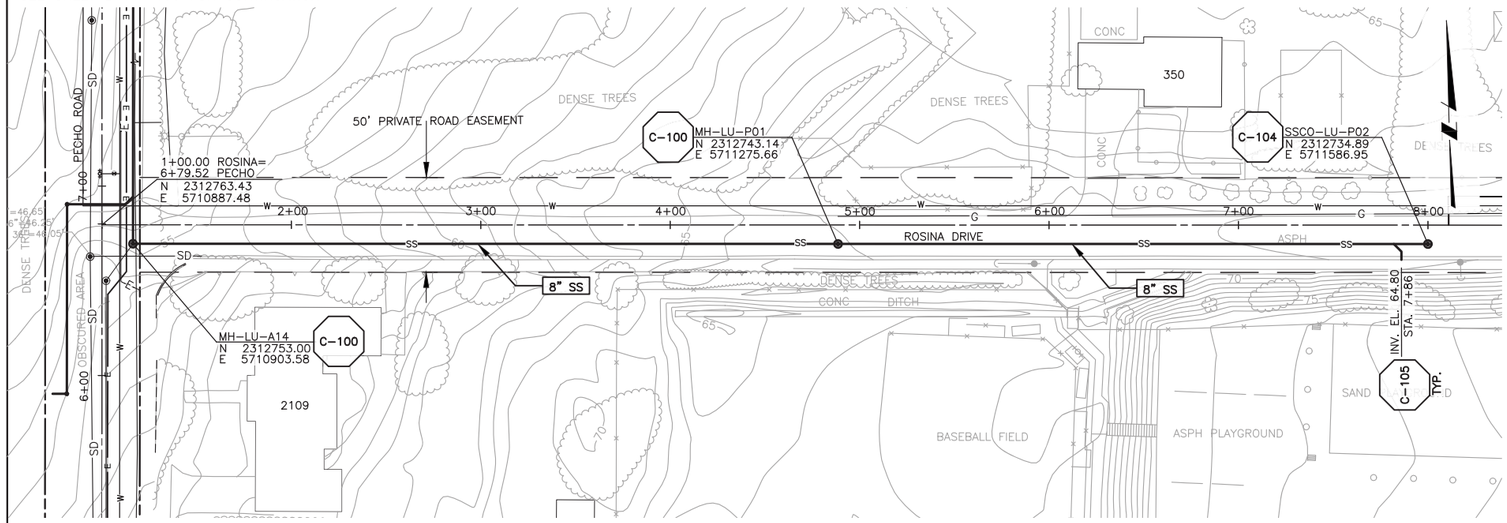

PLAN ON ROSINA DRIVE

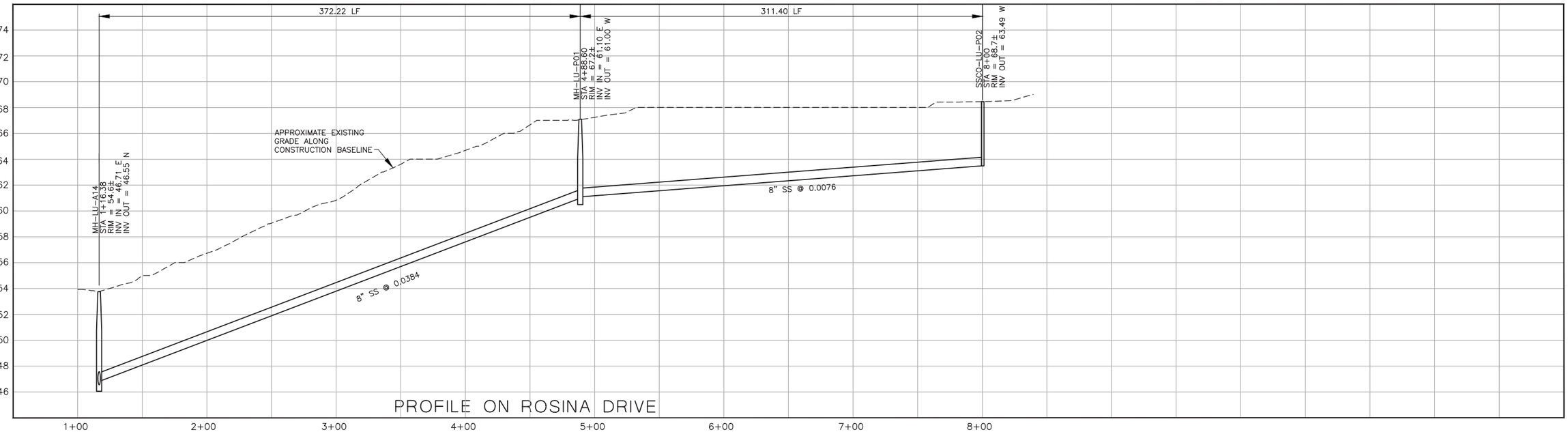

PROFILE ON ROSINA DRIVE

NOTES:

1.
2.
3.

SCALE:
HORZ: 1"=40'
VERT: 1"=4'

REV. NO.	DATE	DRWN	CHKD	REMARKS

DESIGNED BY: DCS/DJN
DRAWN BY: DCS
CHECKED BY: JPW
DATE: APRIL 2012

CDM Smith
2295 Gateway Oaks Drive, Suite 240
Sacramento, CA 95833
Tel: (916) 567-9900

0 1/2 1
IF THIS BAR DOES NOT MEASURE 1" THEN ADJUST SCALE ACCORDINGLY

REGISTERED PROFESSIONAL ENGINEER
JEFFREY P. WAGNER
Lic. No. 26,431
Expires 3/31/14
CIVIL
STATE OF CALIFORNIA

eda design professionals
civil engineers • land surveyors • land planners
1998 santa barbara st • san luis obispo, ca 93401
ph: 805/549-8658 • email: eda@edainc.com

DIGALERT
DIAL TOLL FREE
1-800-642-2444
AT LEAST TWO DAYS BEFORE YOU DIG
UNDERGROUND SERVICE ALERT OF NORTHERN CALIFORNIA

LOS OSOS WASTEWATER COLLECTION SYSTEM

PLAN AND PROFILE
ROSINA DRIVE
STA 1+15 TO STA 8+00

PROJECT NO.42502-83120
FILE NAME: B-PP-165
SHEET NO.
B-PP-165

K:\22650700 lo sewer cdm\3-civil drawings\3A-Sheets\Con Docs\B-PP-165.dwg 4/02/12 03:39 PM daniels

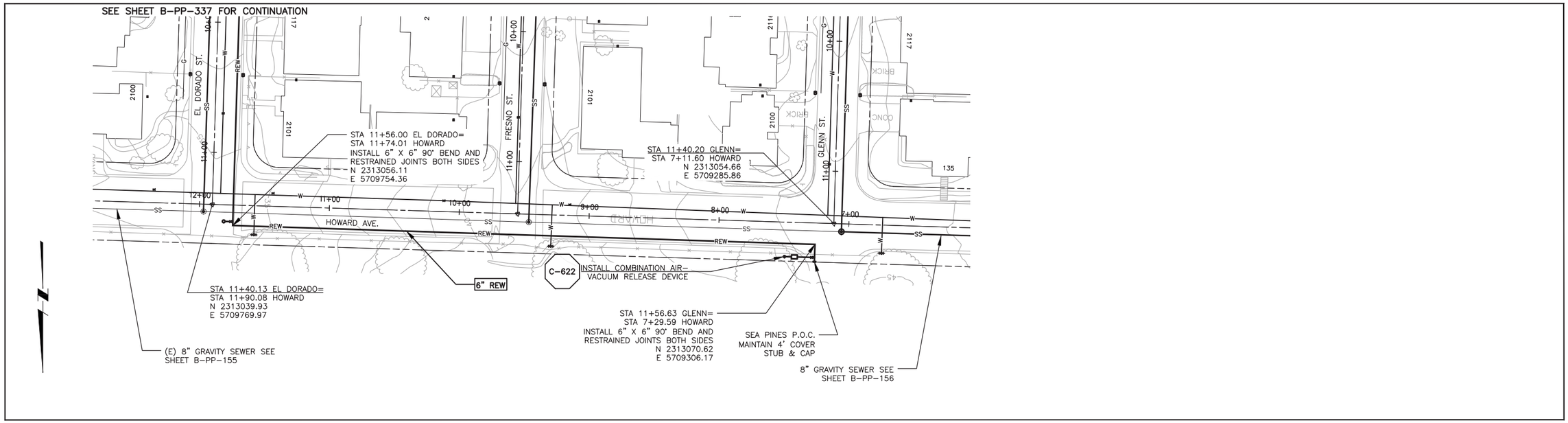

PLAN ON HOWARD AVE

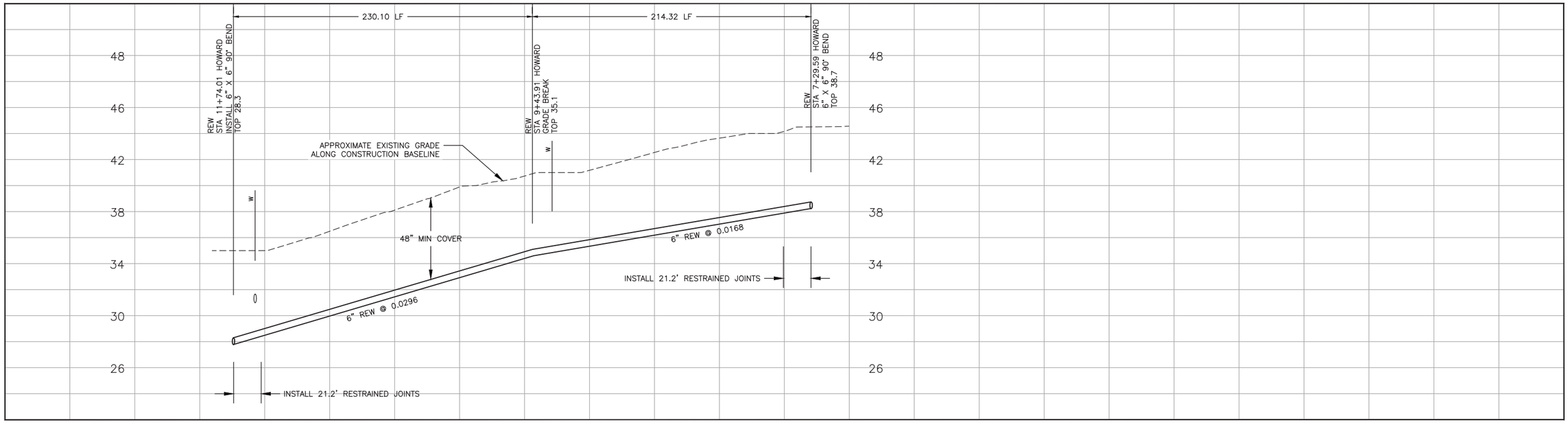

PROFILE ON HOWARD AVE

NOTES:

1.
2.
3.

SCALE:
HORZ: 1"=40'
VERT: 1"=4'

REV. NO.	DATE	DRWN	CHKD	REMARKS

DESIGNED BY: DCS/DJN
DRAWN BY: DCS
CHECKED BY: JPW
DATE: APRIL 2012

CDM Smith
2295 Gateway Oaks Drive, Suite 240
Sacramento, CA 95833
Tel: (916) 567-9900

0 1/2 1
IF THIS BAR DOES NOT MEASURE 1" THEN ADJUST SCALE ACCORDINGLY

REGISTERED PROFESSIONAL ENGINEER
JEFFREY P. WAGNER
Lic. No. 26,431
Expires 3/31/14
OF CALIFORNIA

eda design professionals
civil engineers • land surveyors • land planners
1998 santa barbara st • san luis obispo, ca 93401
ph: 805/549-8658 • email: eda@edainc.com

DIGALERT
DIAL TOLL FREE
1-800-642-2444
AT LEAST TWO DAYS
BEFORE YOU DIG
UNDERGROUND SERVICE ALERT OF NORTHERN CALIFORNIA

LOS OSOS WASTEWATER COLLECTION SYSTEM

PLAN AND PROFILE – REW
HOWARD AVE
STA 7+00 TO STA 12+00

PROJECT NO.42502-83120
FILE NAME: B-PP-336

SHEET NO.
B-PP-336

K:\22650700 lo sewer cdm\3-civil drawings\3A-Sheets\Con Docs\B-PP-336.dwg 4/02/12 03:39 PM daniels

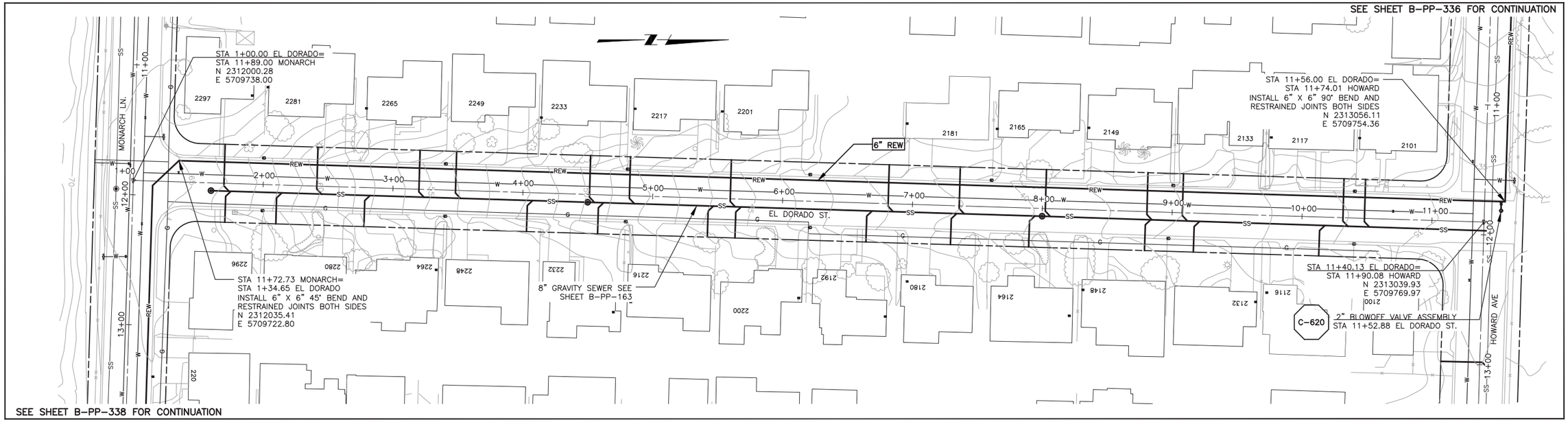

PLAN ON EL DORADO ST

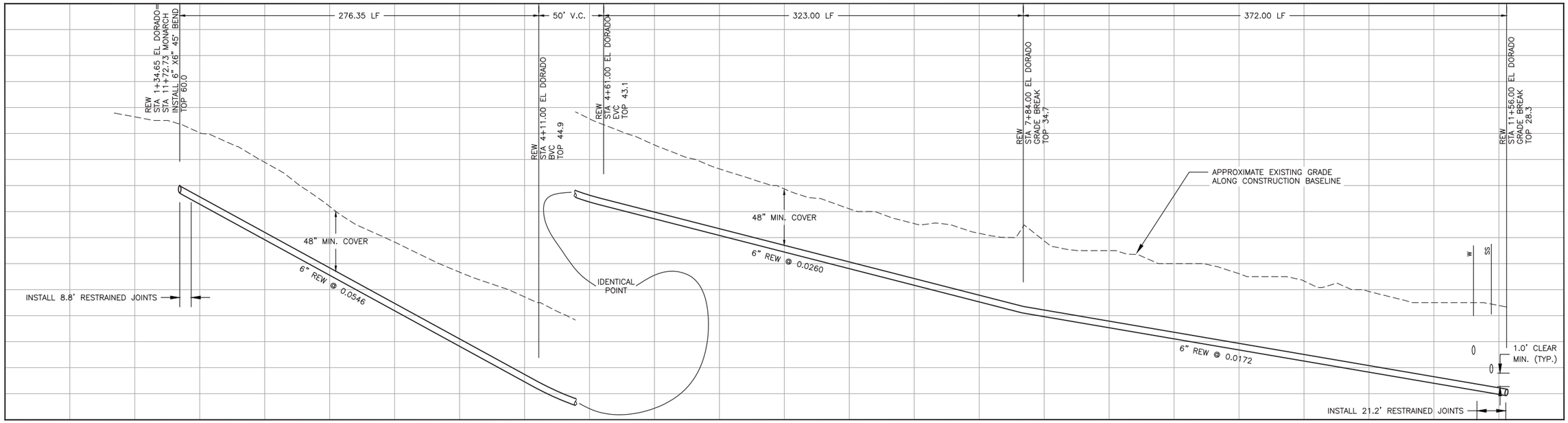

PROFILE ON EL DORADO ST

CONSTRUCTION BASELINE STATION

NOTES:

1.
2.
3.

SCALE:
HORZ: 1"=40'
VERT: 1"=4'

REV. NO.	DATE	DRWN	CHKD	REMARKS

DESIGNED BY: DCS/DJN
DRAWN BY: DCS
CHECKED BY: JPW
DATE: APRIL 2012

CDM Smith
2295 Gateway Oaks Drive, Suite 240
Sacramento, CA 95833
Tel: (916) 567-9900

0 1/2 1
IF THIS BAR DOES NOT MEASURE 1" THEN ADJUST SCALE ACCORDINGLY

REGISTERED PROFESSIONAL ENGINEER
JEFFREY P. WARNER
Lic: No. 26,431
Expires 3/31/14
STATE OF CALIFORNIA

eda design professionals
civil engineers • land surveyors • land planners
1998 santa barbara st • san luis obispo, ca 93401
ph: 805/549-8658 • email: eda@edainc.com

DIGALERT
DIAL TOLL FREE
1-800-642-2444
AT LEAST TWO DAYS BEFORE YOU DIG
UNDERGROUND SERVICE ALERT OF NORTHERN CALIFORNIA

LOS OSOS WASTEWATER COLLECTION SYSTEM

PLAN AND PROFILE – REW
EL DORADO STREET
STA 1+00 TO STA 11+50

PROJECT NO.42502-83120
FILE NAME: B-PP-337
SHEET NO.
B-PP-337

K:\22650700 lo sewer cdm\3-civil drawings\3a-Sheets\Con Docs\B-PP-237.dwg 4/02/12 03:40 PM daniels

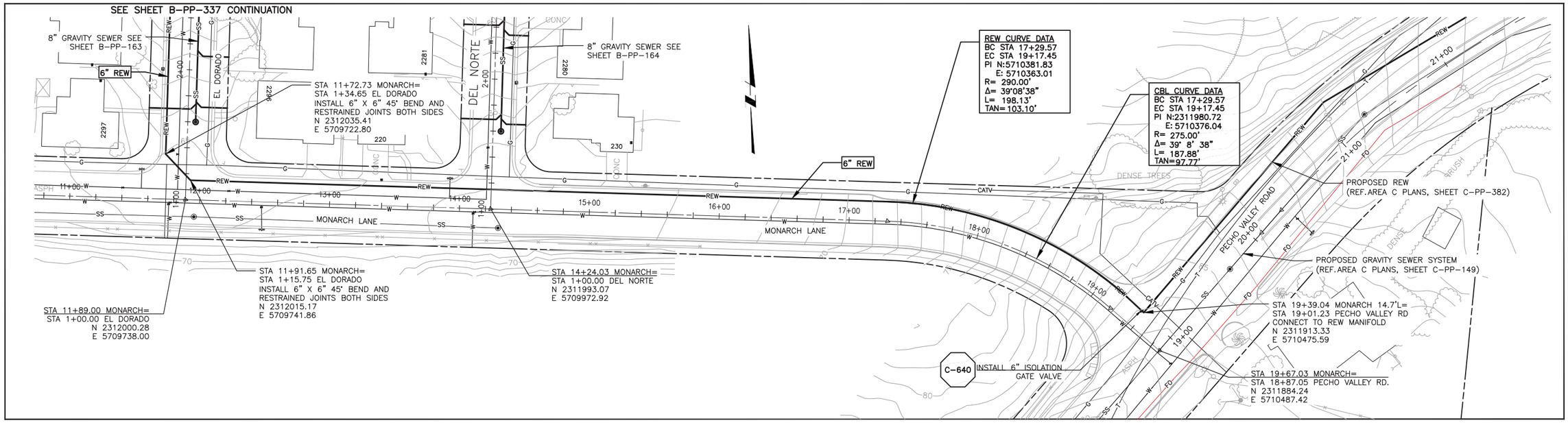

PLAN ON MONARCH LN

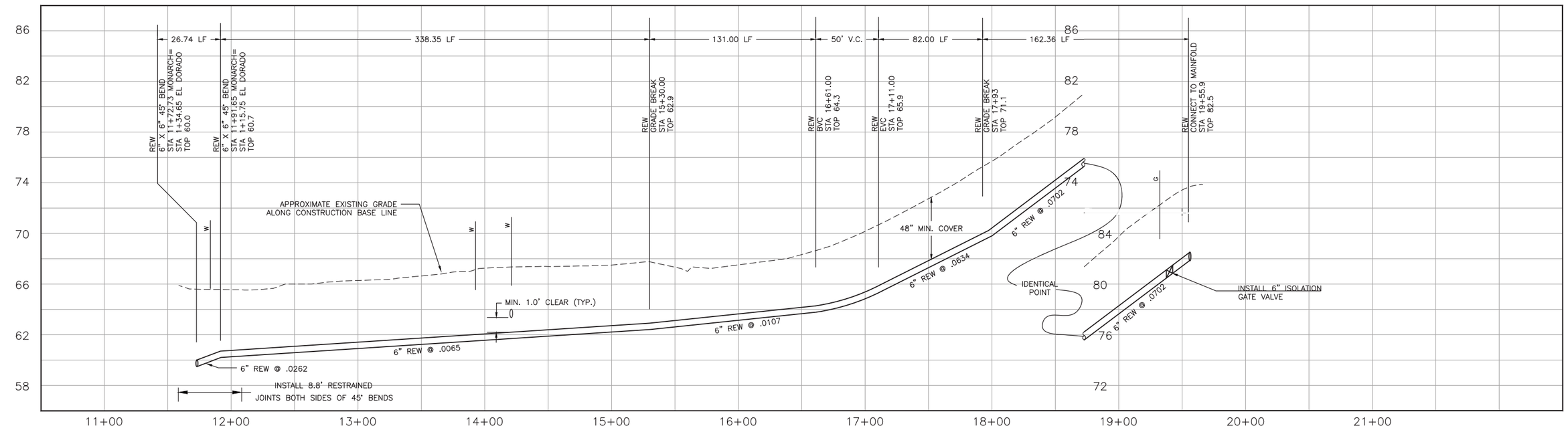

PROFILE ON MONARCH LN

NOTES:

1.
2.
3.

SCALE:
HORZ: 1"=40'
VERT: 1"=4'

REV. NO.	DATE	DRWN	CHKD	REMARKS

DESIGNED BY: DCS/DJN
DRAWN BY: DCS
CHECKED BY: JPW
DATE: APRIL 2012

CDM Smith
2295 Gateway Oaks Drive, Suite 240
Sacramento, CA 95833
Tel: (916) 567-9900

0 1/2 1
IF THIS BAR DOES NOT MEASURE 1" THEN ADJUST SCALE ACCORDINGLY

REGISTERED PROFESSIONAL ENGINEER JEFFREY P. WARNER Lic. No. 26,431 Expires 3/31/14 STATE OF CALIFORNIA

eda design professionals
civil engineers • land surveyors • land planners
1998 santa barbara st • san luis obispo, ca 93401
ph: 805/549-8658 • email: eda@edainc.com

DIGALERT
DIAL TOLL FREE
1-800-642-2444
AT LEAST TWO DAYS BEFORE YOU DIG
UNDERGROUND SERVICE ALERT OF NORTHERN CALIFORNIA

LOS OSOS WASTEWATER COLLECTION SYSTEM

PLAN AND PROFILE – REW
MONARCH LANE
STA 11+60 TO 20+00

PROJECT NO.42502-83120
FILE NAME: B-PP-338

SHEET NO.
B-PP-338

K:\226507100 lo sewer cctm\3>civil drawings\3>Sheets\Con Docs\B-PP-338.dwg 4/02/12 03:41 PM daniels

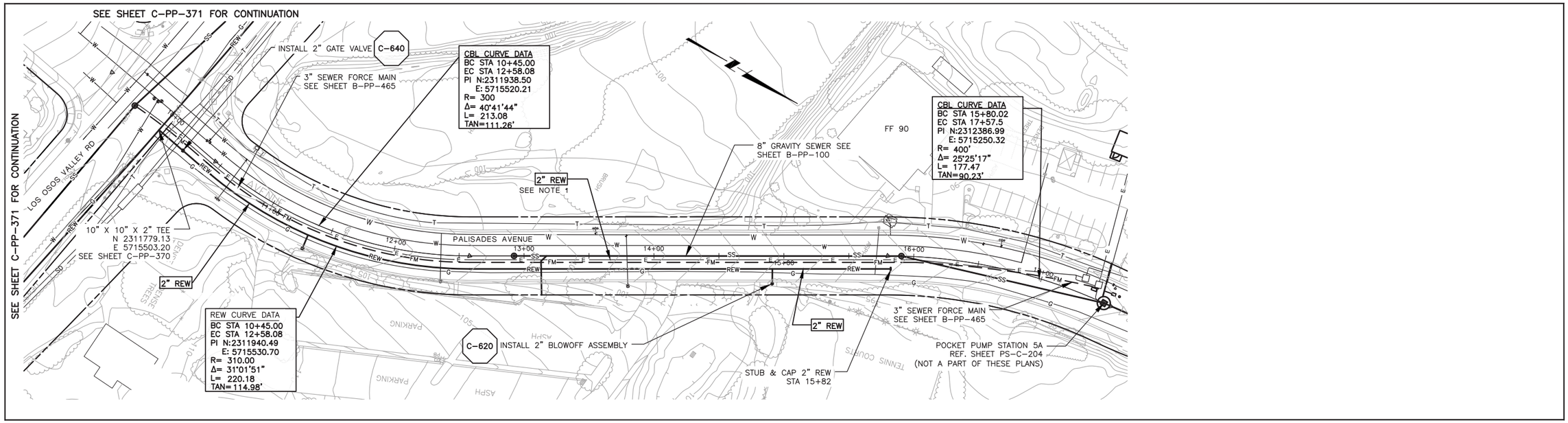

PLAN ON PALISADES AVENUE

PROFILE ON PALISADES AVENUE

CONSTRUCTION BASELINE STATION

NOTES:

1. SEE SHEET B-G-010 FOR REQUIREMENTS OF ELECTRICAL CONDUIT AND MANHOLE.
2.
3.

SCALE:
HORZ: 1"=40'
VERT: 1"=4'

REV. NO.	DATE	DRWN	CHKD	REMARKS

DESIGNED BY: DCS/DJN
DRAWN BY: DCS
CHECKED BY: JPW
DATE: APRIL 2012

CDM Smith
2295 Gateway Oaks Drive, Suite 240
Sacramento, CA 95833
Tel: (916) 567-9900

0 1/2 1
IF THIS BAR DOES NOT MEASURE 1" THEN ADJUST SCALE ACCORDINGLY

REGISTERED PROFESSIONAL ENGINEER
JEFFREY P. WARNER
Lic. No. 26,431
Expires 3/31/13
eda design professionals
civil engineers • land surveyors • land planners
1998 santa barbara st • san luis obispo, ca 93401
ph: 805/549-8658 • email: eda@edainc.com

DIGALERT
DIAL TOLL FREE
1-800-642-2444
AT LEAST TWO DAYS BEFORE YOU DIG
UNDERGROUND SERVICE ALERT OF NORTHERN CALIFORNIA

LOS OSOS WASTEWATER COLLECTION SYSTEM

PLAN AND PROFILE – REW
PALISADES AVENUE
STA. 9+50 TO STA. 16+00

PROJECT NO.42502-83120
FILE NAME: B-PP-339
SHEET NO.
B-PP-339

K:\22650700 lo sewer cdm\3-civil drawings\3-Sheets\Con Docs\B-PP-339.dwg 4/02/12 03:42 PM daniels

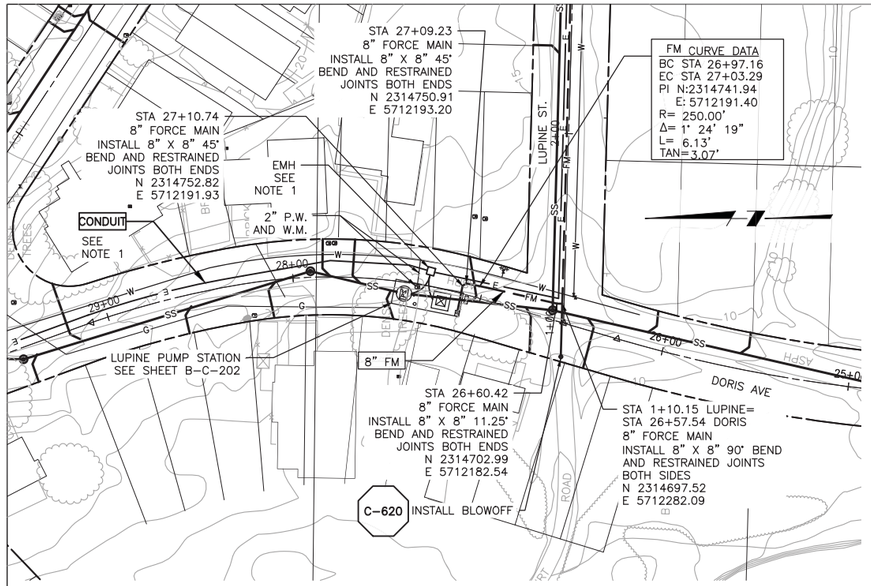

PLAN ON DORIS AVENUE

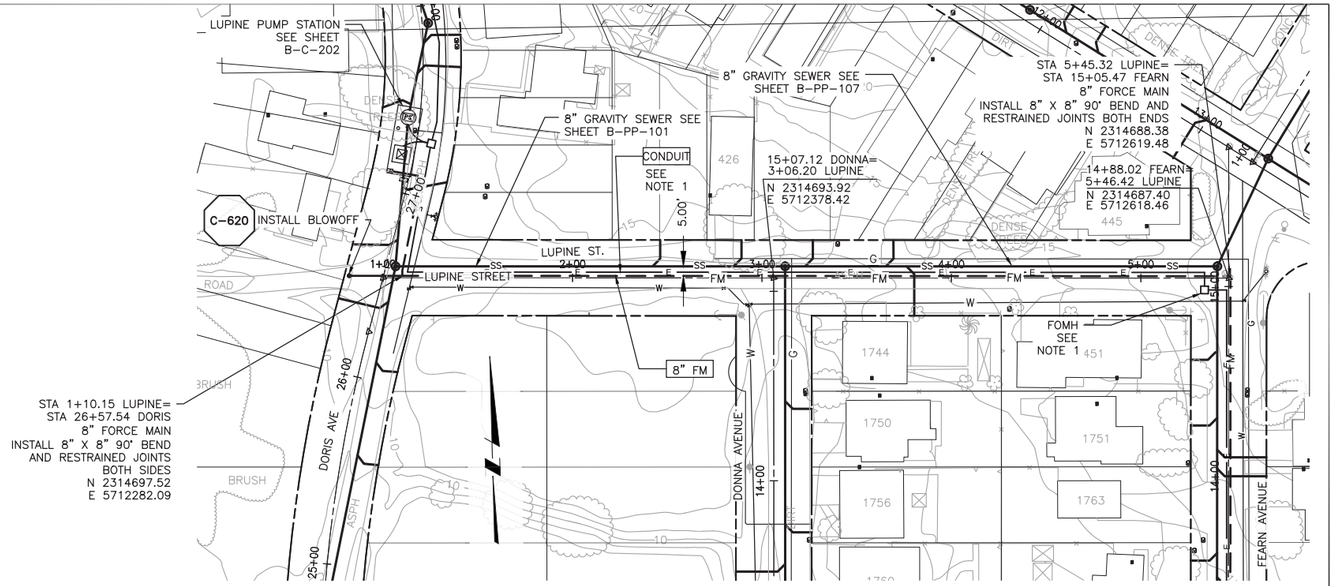

STA 1+10.15 LUPINE=
STA 26+57.54 DORIS
8" FORCE MAIN
INSTALL 8" X 8" 90° BEND
AND RESTRAINED JOINTS
BOTH SIDES
N 2314697.52
E 5712282.09

SEE SHEET B-PP-461 FOR CONTINUATION

PLAN ON LUPINE STREET

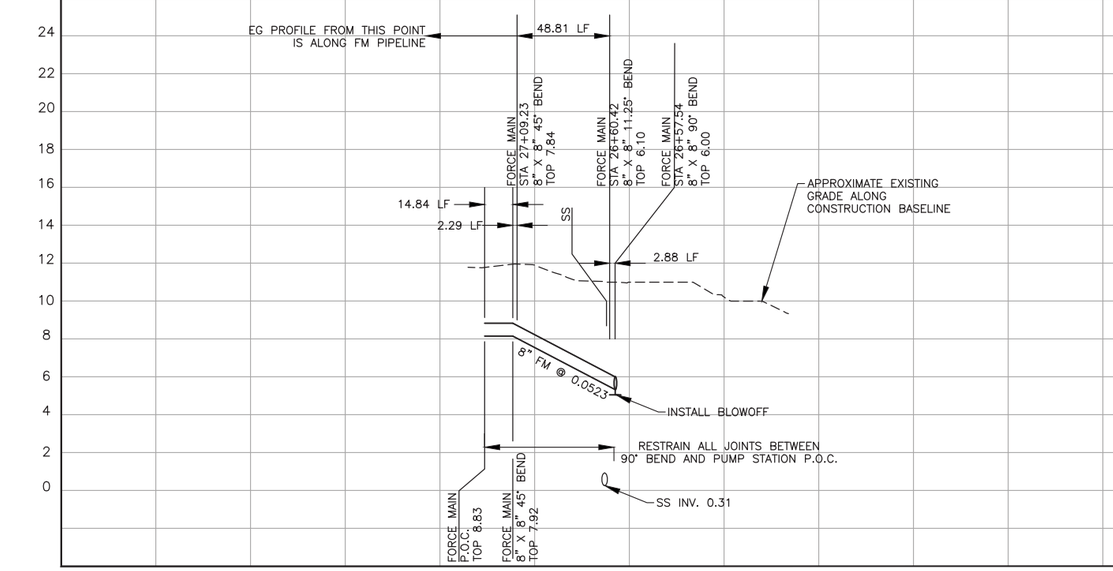

PROFILE ON DORIS AVENUE

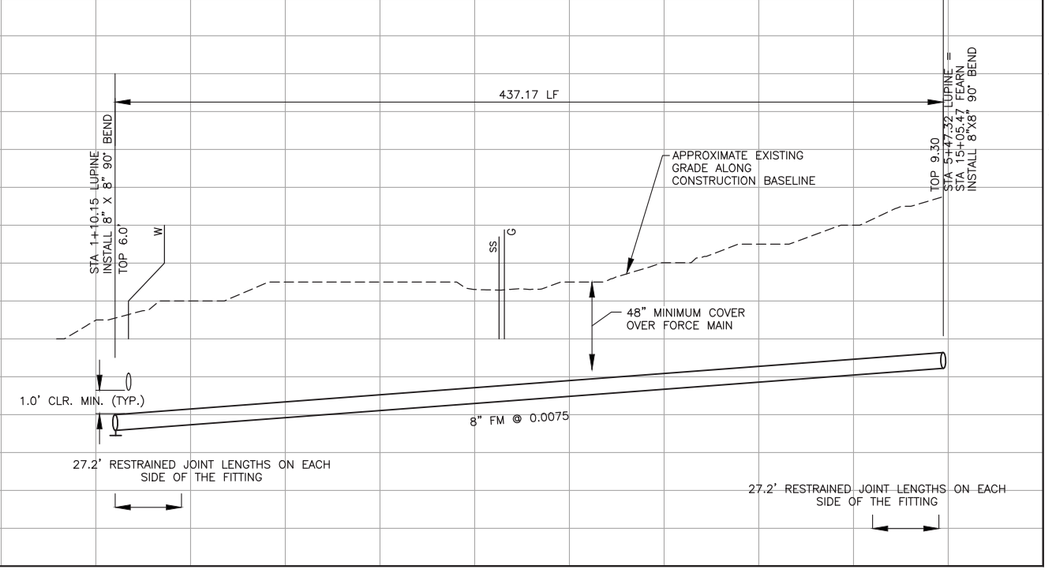

PROFILE ON LUPINE STREET

NOTES:

1. REFERENCE B-G-010 FOR ELECTRICAL CONDUIT AND MANHOLE INFORMATION
2.
3.

SCALE:
HORZ: 1"=40'
VERT: 1"=4'

REV. NO.	DATE	DRWN	CHKD	REMARKS

DESIGNED BY: DCS/DJN
DRAWN BY: DCS
CHECKED BY: JPW
DATE: APRIL 2012

CDM Smith
2295 Gateway Oaks Drive, Suite 240
Sacramento, CA 95833
Tel: (916) 567-9900

0 1/2 1
IF THIS BAR DOES NOT MEASURE 1" THEN ADJUST SCALE ACCORDINGLY

REGISTERED PROFESSIONAL ENGINEER
JEFFREY P. WORKS
Lic. No: 26,431
Expires 3/31/14
STATE OF CALIFORNIA

eda design professionals
civil engineers • land surveyors • land planners
1998 santa barbara st • san luis obispo, ca 93401
ph: 805/549-8658 • email: eda@edainc.com

DIGALERT
DIAL TOLL FREE
1-800-642-2444
AT LEAST TWO DAYS
BEFORE YOU DIG
UNDERGROUND SERVICE ALERT OF NORTHERN CALIFORNIA

LOS OSOS WASTEWATER COLLECTION SYSTEM
PLAN AND PROFILE – FM
LUPINE FORCE MAIN
DORIS AVENUE ; 26+35 TO 27+70
LUPINE STREET; 1+00 TO 5+45

PROJECT NO.42502-83120
FILE NAME: B-PP-460
SHEET NO.
B-PP-460

K:\22650700 lo sewer cdm\3-civil drawings\3a-Sheets\Con Docs\B-PP-460.dwg 4/02/12 03:42 PM daniels

SEE SHEET B-PP-462 FOR CONTINUATION

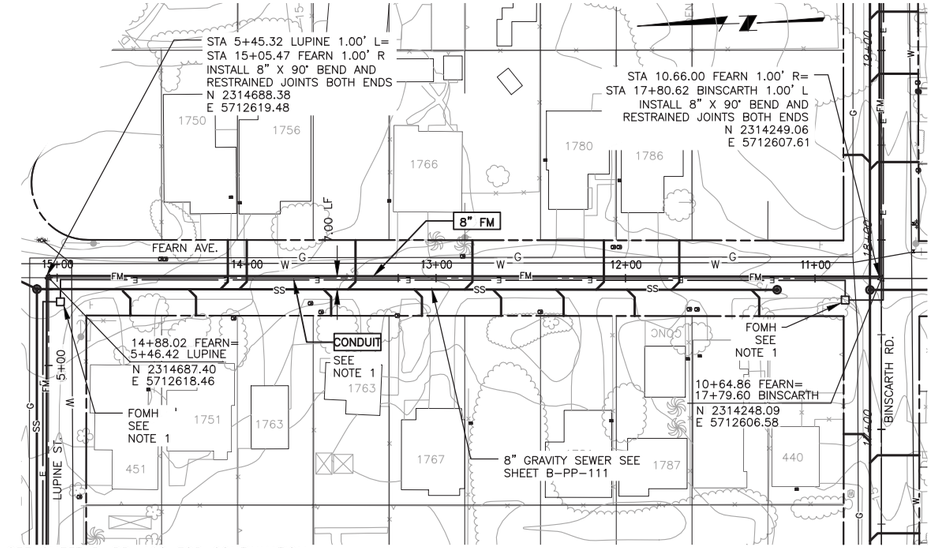

SEE SHEET B-PP-460 FOR CONTINUATION

PLAN ON FEARN AVENUE

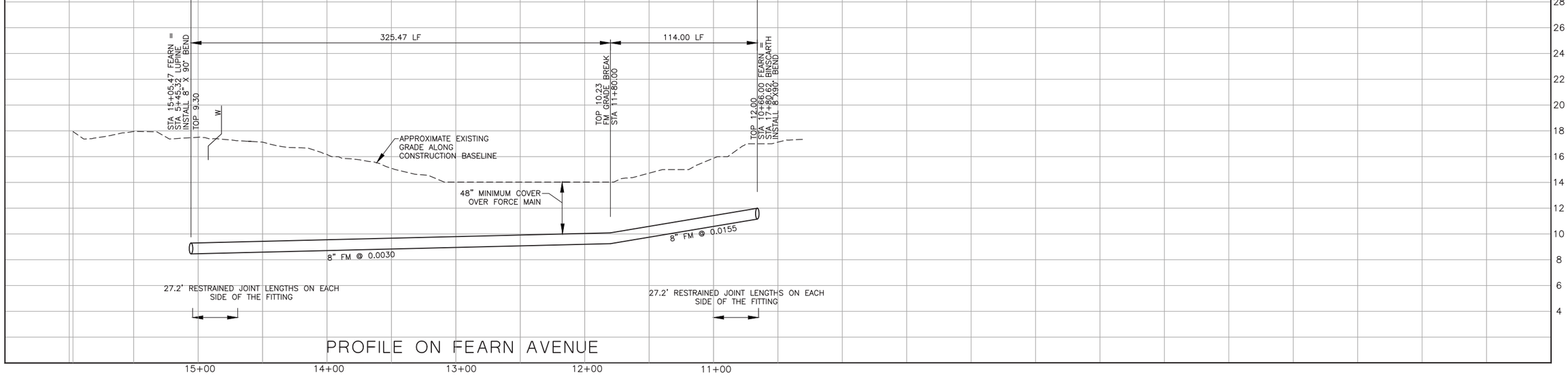

PROFILE ON FEARN AVENUE

CONSTRUCTION
BASELINE
STATION

NOTES:

1. REFERENCE B-G-010 FOR ELECTRICAL CONDUIT AND MANHOLE INFORMATION
2.
3.

SCALE:
HORZ: 1"=40'
VERT: 1"=4'

REV. NO.	DATE	DRWN	CHKD	REMARKS

DESIGNED BY: DCS/DJN
DRAWN BY: DCS
CHECKED BY: JPW
DATE: APRIL 2012

CDM Smith
2295 Gateway Oaks Drive, Suite 240
Sacramento, CA 95833
Tel: (916) 567-9900

0 1/2 1
IF THIS BAR DOES NOT MEASURE 1" THEN ADJUST SCALE ACCORDINGLY

REGISTERED PROFESSIONAL ENGINEER
JEFFREY P. WORKER
Lic. No: 26,431
Expires 3/31/14
STATE OF CALIFORNIA

eda design professionals
civil engineers • land surveyors • land planners
1998 santa barbara st • san luis obispo, ca 93401
ph: 805/549-8658 • email: eda@edainc.com

DIGALERT
DIAL TOLL FREE
1-800-642-2444
AT LEAST TWO DAYS
BEFORE YOU DIG
UNDERGROUND SERVICE ALERT OF NORTHERN CALIFORNIA

LOS OSOS WASTEWATER COLLECTION SYSTEM
PLAN AND PROFILE – FM

FEARN AVENUE
STA 10+65 TO STA 15+00

PROJECT NO.42502-83120
FILE NAME: B-PP-461
SHEET NO.
B-PP-461

K:\22650700 lo sewer cdm\3-civil drawings\3a-Sheets\Con Docs\B-PP-461.dwg 4/02/12 03:43 PM daniels

SEE SHEET B-PP-461 FOR CONTINUATION

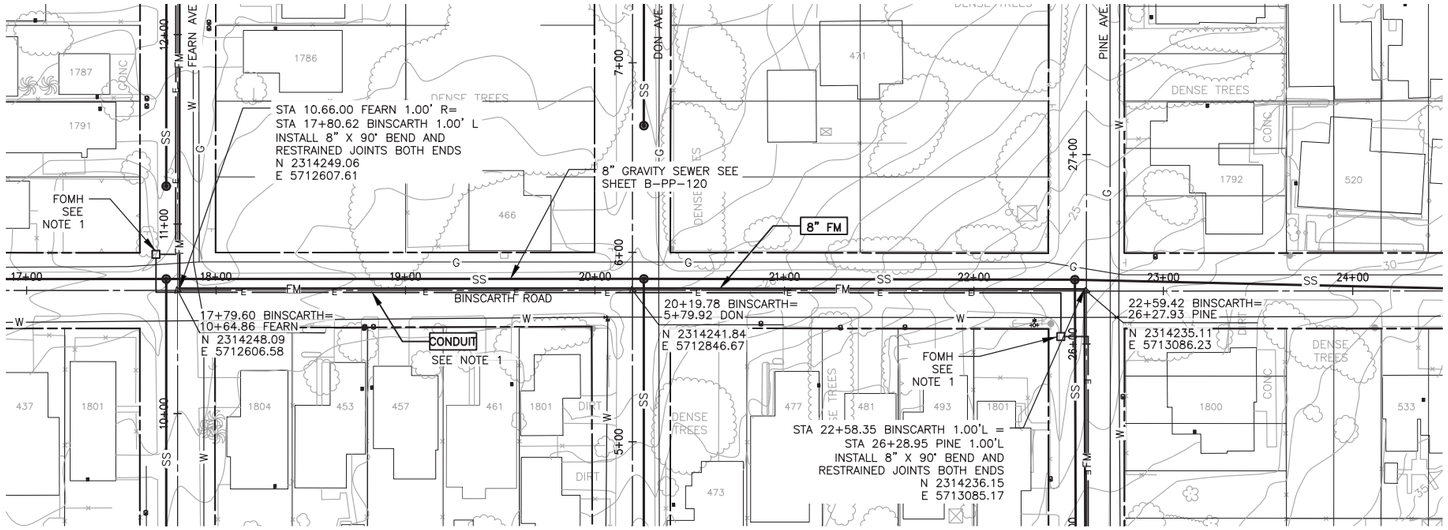

SEE SHEET B-PP-463 FOR CONTINUATION

PLAN ON BINSCARTH ROAD

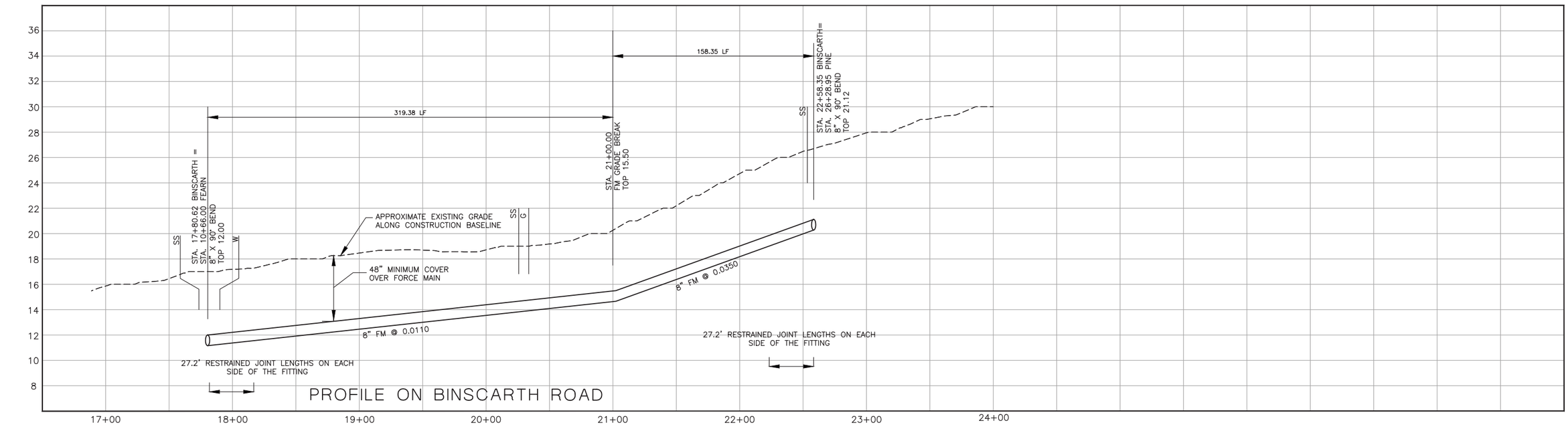

PROFILE ON BINSCARTH ROAD

CONSTRUCTION
BASELINE
STATION

NOTES:

1. REFER TO SHEET B-G-010 FOR REQUIREMENTS OF ELECTRICAL CONDUIT AND MANHOLES.
2.
3.

SCALE:
HORZ: 1"=40'
VERT: 1"=4'

REV. NO.	DATE	DRWN	CHKD	REMARKS

DESIGNED BY: DCS/DJN
DRAWN BY: DCS
CHECKED BY: JPW
DATE: APRIL 2012

CDM Smith
2295 Gateway Oaks Drive, Suite 240
Sacramento, CA 95833
Tel: (916) 567-9900

0 1/2 1
IF THIS BAR DOES NOT MEASURE 1" THEN ADJUST SCALE ACCORDINGLY

REGISTERED PROFESSIONAL ENGINEER
JEFFREY P. WORKS
Lic. No: 26,431
Expires 3/31/14
STATE OF CALIFORNIA

eda design professionals
civil engineers • land surveyors • land planners
1998 santa barbara st • san luis obispo, ca 93401
ph: 805/549-8658 • email: eda@edainc.com

DIGALERT
DIAL TOLL FREE
1-800-642-2444
AT LEAST TWO DAYS
BEFORE YOU DIG
UNDERGROUND SERVICE ALERT OF NORTHERN CALIFORNIA

LOS OSOS WASTEWATER COLLECTION SYSTEM
PLAN AND PROFILE – FM

BINSCARTH ROAD
STA. 17+75 TO STA. 22+60

PROJECT NO.42502-83120
FILE NAME: B-PP-462
SHEET NO.
B-PP-462

K:\22650700 lo sewer cdm\3-civil drawings\3a-Sheets\Con Docs\B-PP-462.dwg 4/02/12 03:44 PM daniels

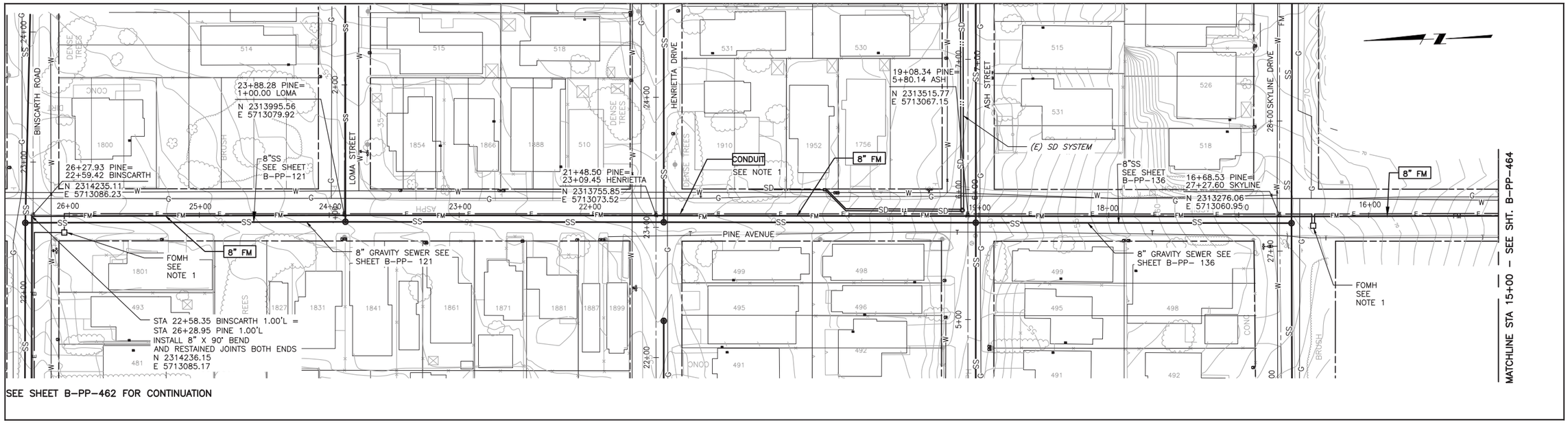

PLAN ON PINE AVENUE

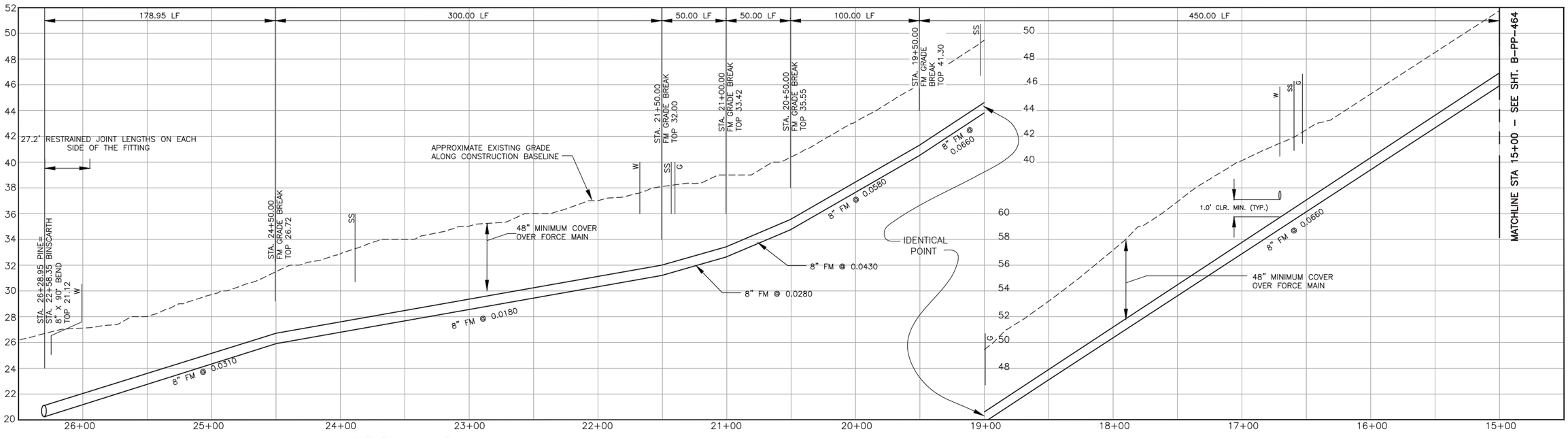

PROFILE ON PINE AVENUE

NOTES:

1. REFER TO SHEET B-G-010 FOR REQUIREMENTS OF ELECTRICAL CONDUIT AND MANHOLES
2.
3.

SCALE:
HORZ: 1"=40'
VERT: 1"=4'

REV. NO.	DATE	DRWN	CHKD	REMARKS

DESIGNED BY: DCS/DJN
DRAWN BY: DCS
CHECKED BY: JPW
DATE: APRIL 2012

CDM Smith
2295 Gateway Oaks Drive, Suite 240
Sacramento, CA 95833
Tel: (916) 567-9900

IF THIS BAR DOES NOT MEASURE 1" THEN ADJUST SCALE ACCORDINGLY

REGISTERED PROFESSIONAL ENGINEER JEFFREY P. WAGNER Lic. No. 26,431 Expires 3/31/14 STATE OF CALIFORNIA

eda design professionals
civil engineers • land surveyors • land planners
1998 santa barbara st • san luis obispo, ca 93401
ph: 805/549-8658 • email: eda@edainc.com

DIGALERT
DIAL TOLL FREE
1-800-642-2444
AT LEAST TWO DAYS BEFORE YOU DIG
UNDERGROUND SERVICE ALERT OF NORTHERN CALIFORNIA

LOS OSOS WASTEWATER COLLECTION SYSTEM
PLAN AND PROFILE – FM

PINE AVENUE
STA 15+00 TO STA 26+30

PROJECT NO.42502-83120
FILE NAME: B-PP-463
SHEET NO.
B-PP-463

K:\22650700 los sewer cdm\3-civil drawings\3a-Sheets\Con Docs\B-PP-463.dwg 4/02/12 03:44 PM daniels

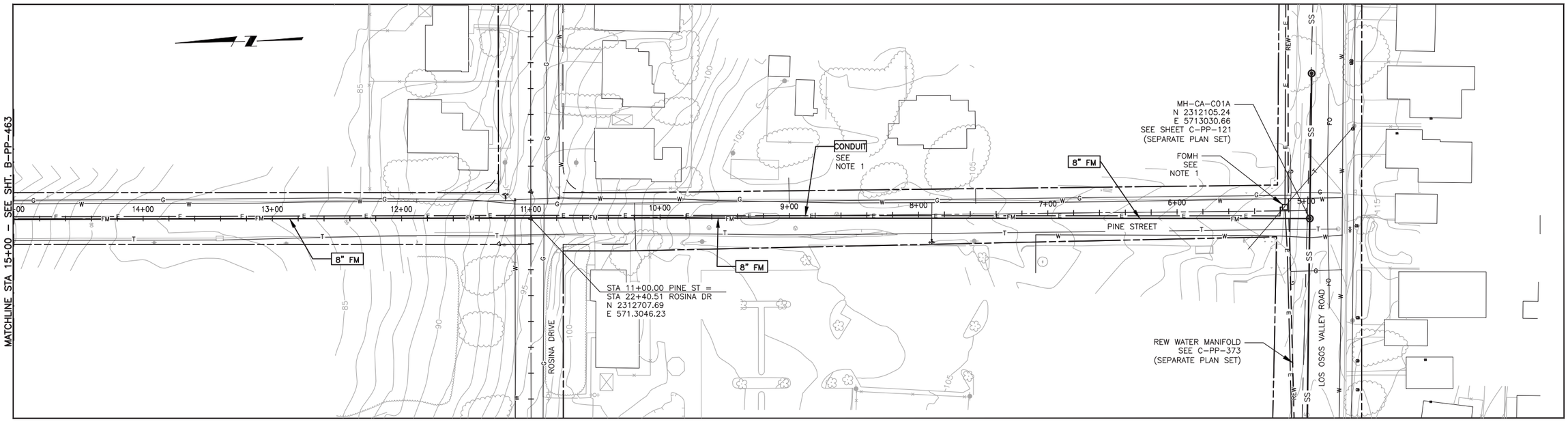

PLAN ON PINE AVENUE

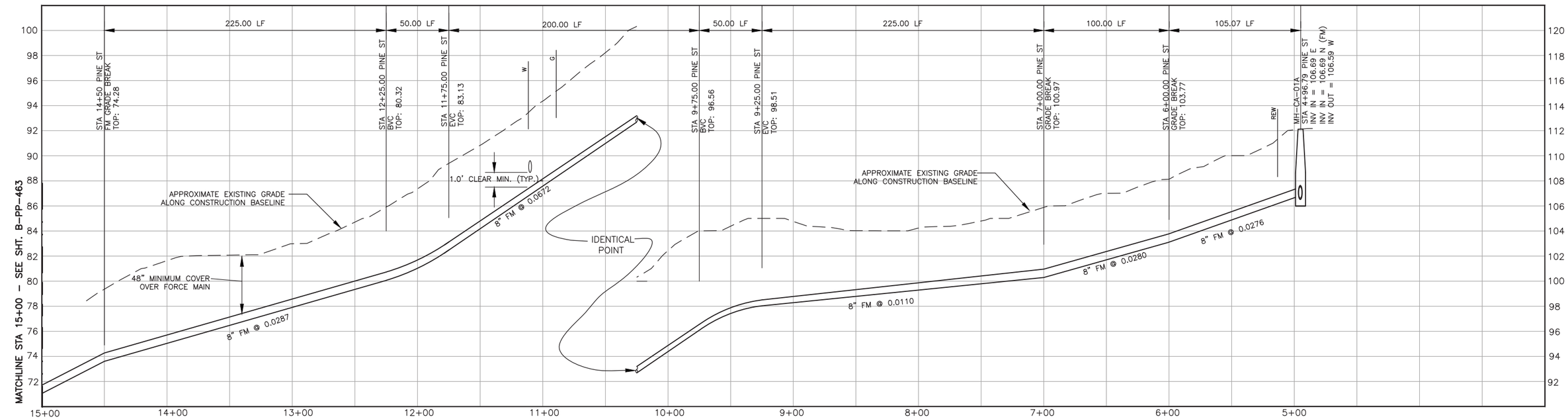

PROFILE ON PINE AVENUE

NOTES:

1. REFER TO SHEET B-G-010 FOR REQUIREMENTS OF ELECTRICAL CONDUIT AND MANHOLES
2.
3.

SCALE:
HORZ: 1"=40'
VERT: 1"=4'

REV. NO.	DATE	DRWN	CHKD	REMARKS

DESIGNED BY: DCS/DJN
DRAWN BY: DCS
CHECKED BY: JPW
DATE: APRIL 2012

CDM Smith
2295 Gateway Oaks Drive, Suite 240
Sacramento, CA 95833
Tel: (916) 567-9900

0 1/2 1
IF THIS BAR DOES NOT MEASURE 1" THEN ADJUST SCALE ACCORDINGLY

REGISTERED PROFESSIONAL ENGINEER
JEFFREY P. WARNER
Lic. No: 26,431
Expires 3/31/14
STATE OF CALIFORNIA

eda design professionals
civil engineers • land surveyors • land planners
1998 santa barbara st • san luis obispo, ca 93401
ph: 805/549-8658 • email: eda@edainc.com

DIGALERT
DIAL TOLL FREE
1-800-642-2444
AT LEAST TWO DAYS BEFORE YOU DIG
UNDERGROUND SERVICE ALERT OF NORTHERN CALIFORNIA

LOS OSOS WASTEWATER COLLECTION SYSTEM
PLAN AND PROFILE – FM

PINE AVENUE
STA. 15+00 TO 4+90

PROJECT NO.42502-83120
FILE NAME: B-PP-464
SHEET NO.
B-PP-464

K:\22650700 lo sewer cdm\3-civil drawings\3a-Sheets\Con Docs\B-PP-464.dwg 4/02/12 03:45 PM daniels

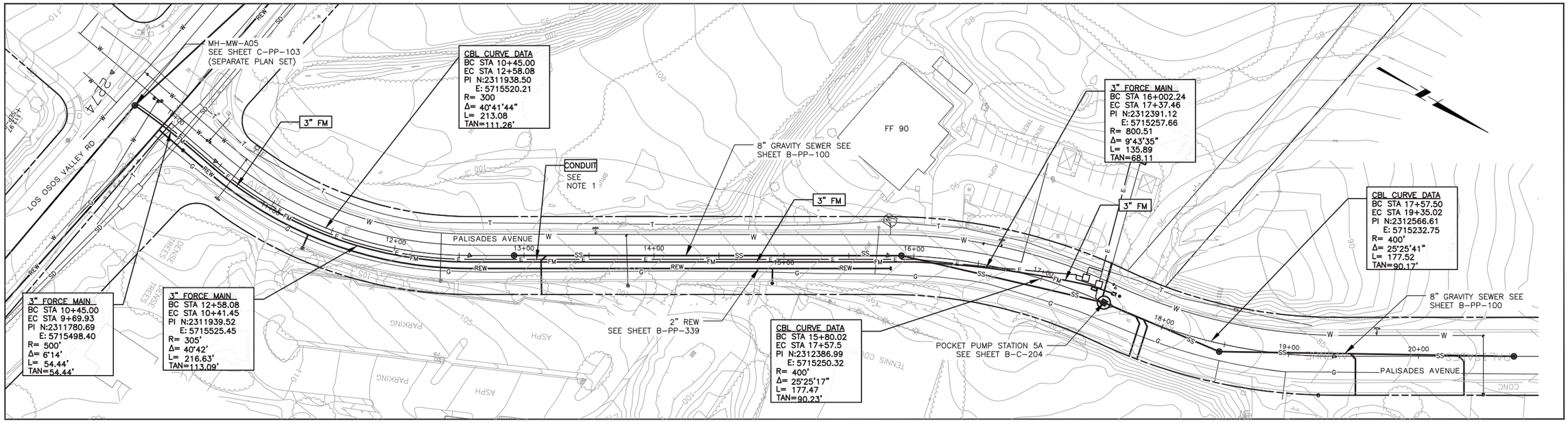

PLAN ON PALISADES AVENUE

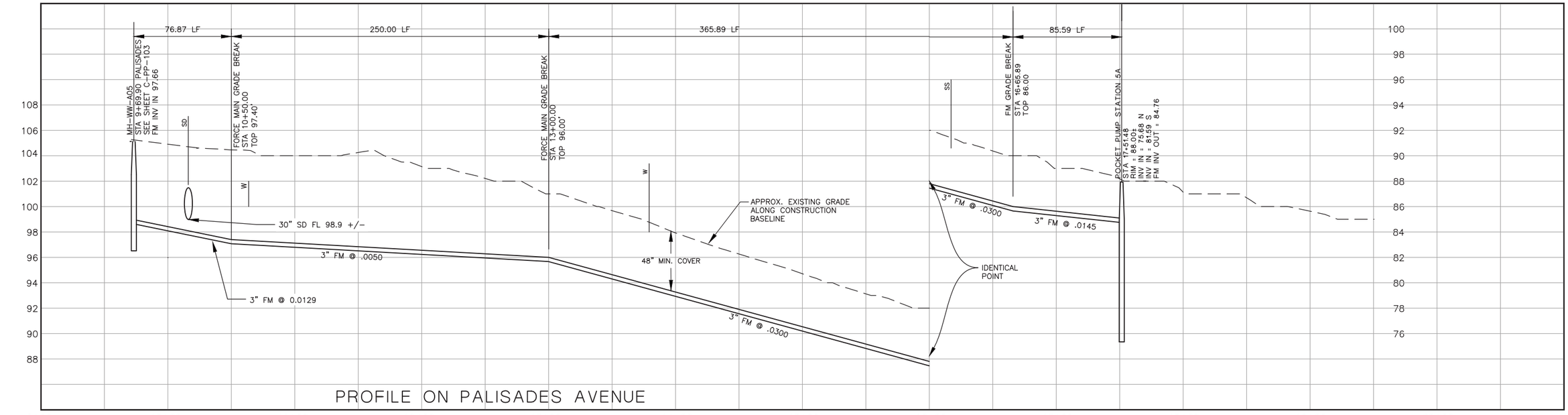

PROFILE ON PALISADES AVENUE

NOTES:

1. SEE SHEET B-G-010 FOR REQUIREMENTS OF ELECTRICAL CONDUIT AND MANHOLES.
2.
3.

SCALE:
HORZ: 1"=40'
VERT: 1"=4'

REV. NO.	DATE	DRWN	CHKD	REMARKS

DESIGNED BY: DCS/DJN
DRAWN BY: DCS
CHECKED BY: JPW
DATE: APRIL 2012

CDM Smith
2295 Gateway Oaks Drive, Suite 240
Sacramento, CA 95833
Tel: (916) 567-9900

IF THIS BAR DOES NOT MEASURE 1" THEN ADJUST SCALE ACCORDINGLY

REGISTERED PROFESSIONAL ENGINEER
JEFFREY P. WARNER
Lic. No: 26,431
Expires 3/31/14
CIVIL
STATE OF CALIFORNIA

design professionals
civil engineers • land surveyors • land planners
1998 santa barbara st • san luis obispo, ca 93401
ph: 805/549-8658 • email: eda@edainc.com

DIGALERT
DIAL TOLL FREE
1-800-642-2444
AT LEAST TWO DAYS BEFORE YOU DIG
UNDERGROUND SERVICE ALERT OF NORTHERN CALIFORNIA

LOS OSOS WASTEWATER COLLECTION SYSTEM
PLAN AND PROFILE – FM

PALISADES AVENUE
STA. 10+00 TO STA. 20+75

PROJECT NO.42502-83120
FILE NAME: B-PP-465

SHEET NO.
B-PP-465

K:\22650700\lo sewer cdm\3civil drawings\3-Sheets\Con Docs\B-PP-465.dwg 4/02/12 03:45 PM danials

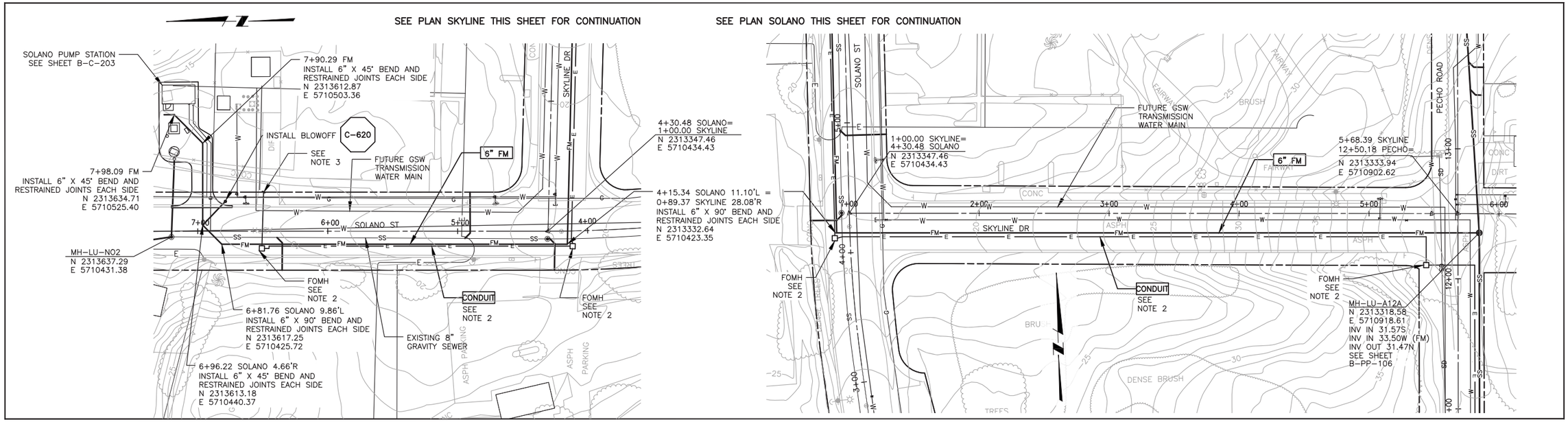

PLAN ON SOLANO STREET

PLAN ON SKYLINE DRIVE

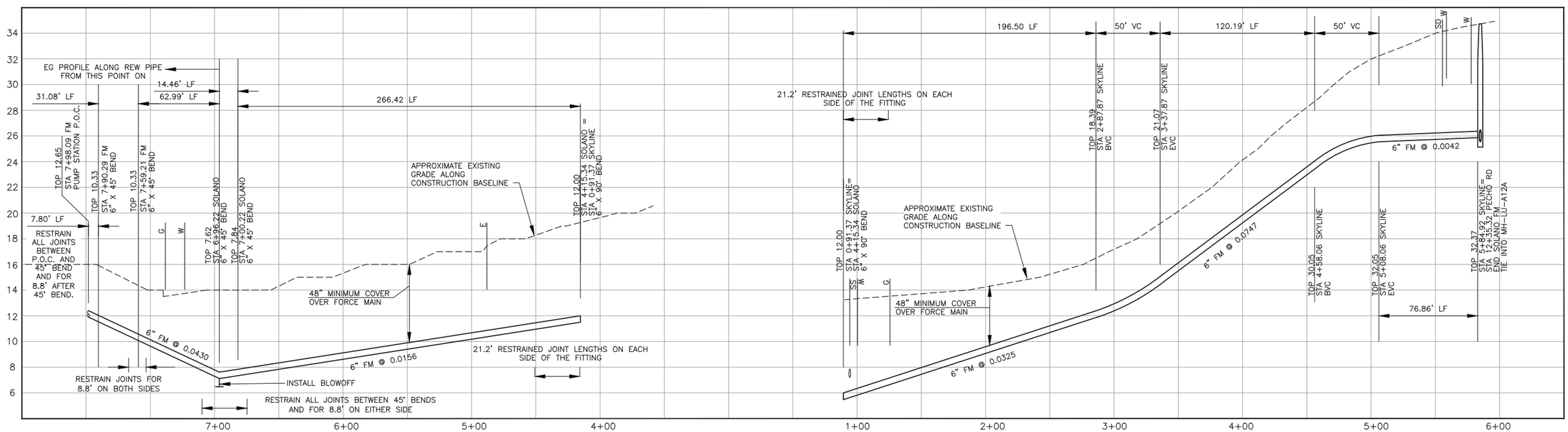

CONSTRUCTION BASELINE STATION

PROFILE ON SOLANO STREET

PROFILE ON SKYLINE DRIVE

NOTES:

1.
2. REFER TO SHEET B-G-010 FOR REQUIREMENTS OF ELECTRICAL CONDUIT AND MANHOLES.
3. TERMINATE CONDUIT AT PROPERTY LINE

SCALE:
HORZ: 1"=40'
VERT: 1"=4'

REV. NO.	DATE	DRWN	CHKD	REMARKS

DESIGNED BY: DCS/DJN
DRAWN BY: DCS
CHECKED BY: JPW
DATE: APRIL 2012

CDM Smith
2295 Gateway Oaks Drive, Suite 240
Sacramento, CA 95833
Tel: (916) 567-9900

0 1/2 1
IF THIS BAR DOES NOT MEASURE 1" THEN ADJUST SCALE ACCORDINGLY

REGISTERED PROFESSIONAL ENGINEER JEFFREY P. WADSWORTH Lic. No: 26,431 Expires 3/31/14 STATE OF CALIFORNIA

eda design professionals
civil engineers • land surveyors • land planners
1998 santa barbara st • san luis obispo, ca 93401
ph: 805/549-8658 • email: eda@edainc.com

DIGALERT
DIAL TOLL FREE
1-800-642-2444
AT LEAST TWO DAYS BEFORE YOU DIG
UNDERGROUND SERVICE ALERT OF NORTHERN CALIFORNIA

LOS OSOS WASTEWATER COLLECTION SYSTEM
PLAN AND PROFILE – FM

SOLANO STREET – STA 4+15 TO 7+05
SKYLINE DRIVE – STA 0+90 TO STA 5+70

PROJECT NO.42502-83120
FILE NAME: B-PP-466
SHEET NO.
B-PP-466

K:\22650700 lo sewer cdm\3civil drawings\3-Sheets\Con Docs\B-PP-466.dwg 4/02/12 03:46 PM daniels

A. GENERAL NOTES

1. ALL STRUCTURAL DRAWINGS SHALL BE USED IN CONJUNCTION WITH THE CIVIL, MECHANICAL, ARCHITECTURAL, ELECTRICAL, INSTRUMENTATION AND SHOP DRAWINGS AND THE PROJECT SPECIFICATIONS.

2. ALL CONSTRUCTION SHALL CONFORM TO THE 2010 EDITION OF THE CALIFORNIA BUILDING CODE (CBC).

3. SEE ALL OTHER PROJECT DOCUMENTS FOR REGLETS, PIPE SLEEVES, CONDUITS OR OTHER ITEMS TO BE EMBEDDED OR PASSED THROUGH CONCRETE STRUCTURES.

4. PENETRATIONS THROUGH WALLS OR SLABS MAY NOT BE SHOWN ON STRUCTURAL DRAWINGS – REFER TO ASSOCIATED DOCUMENTS FOR LOCATIONS.

5. THE MINIMUM CLEAR DISTANCE BETWEEN PIPE OR CONDUIT PENETRATIONS SHALL BE 3 TIMES THE DIAMETER OF THE PENETRATION OR 8", WHICHEVER IS SMALLER.

6. NO STRUCTURAL MEMBERS SHALL BE CUT FOR PIPES, DUCTS, ETC., UNLESS SPECIFICALLY DETAILED OR APPROVED IN WRITING BY THE ENGINEER.

7. WRITTEN DIMENSIONS SHALL TAKE PRECEDENCE OVER SCALED SIZES.

8. USE PERTINENT STANDARD DETAILS SHOWN, EVEN THOUGH THEY MAY NOT BE CALLED OUT AT LOCATIONS WHERE THEY APPLY.

9. UNLESS MODIFIED BY THIS NOTE, SPECIAL INSPECTION BY ICC CERTIFIED INSPECTORS SHALL BE CONDUCTED IN ACCORDANCE WITH THE REQUIREMENTS SET FORTH IN SECTION 1704 OF THE CALIFORNIA BUILDING CODE, (CBC). THE FOLLOWING ITEMS, AS A MINIMUM, SHALL RECEIVE SPECIAL INSPECTION:

a. REINFORCING STEEL: REINFORCING STEEL SHALL BE INSPECTED PRIOR TO CLOSING THE FORMS OR DELIVERY OF CONCRETE TO JOB SITE.

b. WATERSTOP: THE INSPECTOR SHALL INSPECT ALL WATERSTOP INSTALLATIONS PRIOR TO CONCRETE PLACEMENT.

c. CAST IN BOLTS INSTALLED IN CONCRETE: BOLTS SHALL BE INSPECTED PRIOR TO AND DURING CONCRETE PLACEMENT.

d. CONCRETE: THE INSPECTOR SHALL SUPERVISE THE PREPARATION OF COMPRESSION TEST SPECIMENS AND THE PLACEMENT OF REINFORCED CONCRETE.

e. ADHESIVE ANCHORS OR DOWELS INSTALLED IN CONCRETE: AT A MINIMUM, THE INSPECTOR SHALL PERIODICALLY VERIFY ANCHOR TYPE, ANCHOR DIMENSIONS, CONCRETE TYPE, CONCRETE COMPRESSIVE STRENGTH, HOLE DIMENSIONS, HOLE CLEANING PROCEDURES, ANCHOR SPACING, EDGE DISTANCES, CONCRETE THICKNESS ANCHOR EMBEDMENT, TIGHTENING TORQUE, AND ADHESIVE EXPIRATION DATE; THE INSPECTOR SHALL VERIFY ANCHOR INSTALLATION HAS BEEN PERFORMED IN COMPLIANCE WITH THE MANUFACTURER'S PUBLISHED INSTRUCTIONS AND THE APPROPRIATE ICC EVALUATION SERVICE REPORT.

f. EXPANSION ANCHORS INSTALLED IN CONCRETE: THE INSPECTOR SHALL PERIODICALLY VERIFY ANCHOR TYPE, ANCHOR DIMENSIONS, CONCRETE TYPE, CONCRETE COMPRESSIVE STRENGTH, HOLE DIMENSIONS, ANCHOR SPACING, EDGE DISTANCES, CONCRETE MEMBER THICKNESS, ANCHOR EMBEDMENT, AND TIGHTENING TORQUE. THE INSPECTOR SHALL VERIFY ANCHOR INSTALLATION HAS BEEN PERFORMED IN COMPLIANCE WITH THE MANUFACTURER'S PUBLISHED INSTRUCTIONS AND THE APPROPRIATE ICC EVALUATION SERVICE REPORT.

g. WELDING: CONTINUOUS VISUAL INSPECTION SHALL BE PROVIDED FOR ALL STRUCTURAL WELDING DONE IN THE FIELD.

10. THE CONTRACTOR SHALL BE RESPONSIBLE FOR SAFELY SUPPORTING THE STRUCTURE DURING CONSTRUCTION. STRUCTURES HAVE BEEN DESIGNED FOR OPERATIONAL LOADS ON THE COMPLETED STRUCTURES. DURING CONSTRUCTION, STRUCTURES SHALL BE SUPPORTED BY BRACING OR SHORING WHEREVER EXCESSIVE CONSTRUCTION LOADS MAY OCCUR.

B. DESIGN LOADS

1. GRAVITY: PUMP STATION AND VAULT ROOF, LIVE LOAD HS–20

2. LATERAL: LATERAL LOADS SHALL COMPLY WITH THE REQUIREMENTS OF CHAPTER 16 OF THE 2010 CBC, UNLESS OTHERWISE NOTED. THE FOLLOWING DESIGN PARAMETERS SHALL BE USED.

   WIND (2010 CBC): 85 MPH, EXPOSURE D, Iw = 1.15 (UNO)

OCCUPANCY CATEGORY: IV

B. DESIGN LOADS CONT

SEISMIC DESIGN CATEGORY D
SEISMIC COEFFICENTS (2010 CBC): SEE TABLE BELOW

FACILITIES	S_{DS} *	S_{D1} *
LUPINE	0.965	0.876
MIDTOWN	0.977	0.885
SOLANO	0.984	0.894
POCKET PUMP STATIONS	0.984	0.894

* VALUE IS BASED ON THE HIGHER OF SITE CLASS D OR F (SITE CLASS F IS EQUIVALENT TO SITE CLASS E ASSUMING NO SITE MITIGATION IS PERFORMED TO ADDRESS LIQUEFACTION)

IMPORTANCE FACTOR: I = 1.5, I_p = 1.5

C. GEOTECHNICAL INFORMATION

1. ALLOWABLE BEARING PRESSURE SHALL BE 2000 PSF WITH A 50% ALLOWABLE INCREASE FOR LOAD COMBINATIONS INCLUDING SEISMIC OR WIND LOADS.

2. THE COEFFICIENT OF FRICTION SHALL BE 0.4.

3. ADDITIONAL GEOTECHNICAL DESIGN PARAMETERS ARE IN GEOTECHNICAL REPORT TITLED "GEOTECHNICAL REPORT LOS OSOS WASTEWATER PROJECT LOS OSOS COMMUNITY SERVICES DISTRICT SAN LUIS OBISPO COUNTY, CALIFORNIA" PREPARED BY FUGRO WEST, INC. DATED MARCH 9, 2004 AND "ADDENDUM TO GEOTECHNICAL REPORT FOR LOS OSOS WASTEWATER PROJECT" PREPARED BY FUGRO CONSULTANTS, INC. DATED OCTOBER 24, 2011.

D. CAST–IN–PLACE CONCRETE

1. REINFORCED CONCRETE SHALL CONFORM TO ACI 318–08 AND 350–06.

2. MINIMUM CONCRETE COMPRESSIVE STRENGTH AT 28 DAYS, UNLESS OTHERWISE NOTED ON THE DRAWINGS:

   STRUCTURAL CONCRETE (CLASS E): f'c = 5000 psi

   SEAL SLAB (CLASS D): f'c = 4000 psi

   SIDEWALKS, PAVEMENT, CONCRETE FILL, ENCASEMENT (CLASS B): f'c = 3000 psi

3. REINFORCING STEEL SHALL CONFORM TO THE LATEST EDITION OF ASTM SPECIFICATION A615 GRADE 60 AS SPECIFIED IN SPECIFICATION SECTION 03200.

4. REINFORCING STEEL FABRICATION SHALL BE IN ACCORDANCE WITH THE LATEST EDITION OF CRSI MANUAL OF STANDARD PRACTICE.

5. REINFORCING SHALL HAVE THE FOLLOWING CLEAR CONCRETE COVER, UNLESS OTHERWISE NOTED ON THE DRAWINGS.

CONDITION	COVER
UNFORMED SURFACES IN CONTACT WITH EARTH	3"
FORMED SURFACES EXPOSED TO EARTH, WATER, & WEATHER	2"
BOTTOM SURFACES FOR SLAB OVER WATER	2"
CONCRETE SURFACES FOR DRY CONDITIONS:	
WALLS AND SLABS	1 1/2"
BEAMS:	
PRIMARY REINFORCEMENT	2"
STIRRUPS AND TIES	1 1/2"

6. SPLICED BARS SHALL HAVE A MINIMUM LAP AS SPECIFIED IN LATEST EDITION OF THE ACI 315 DETAILING MANUAL AND ACI 318 CHAPTER 21 UNLESS OTHERWISE NOTED IN CONTRACT DOCUMENTS. ALL SPLICES SHALL BE CLASS B TENSION SPLICES AND BE IN ACCORDANCE WITH THE STANDARD DETAILS, UNO.

7. CONSTRUCTION JOINTS SHALL NOT BE PLACED AT LOCATIONS OTHER THAN THOSE SHOWN ON THE DRAWINGS WITHOUT THE PRIOR APPROVAL OF THE ENGINEER.

8. ALL EXPOSED CORNERS OF CONCRETE SHALL HAVE 3/4" CHAMFER, UNLESS NOTED OTHERWISE.

9. WRITTEN SPACING AND LOCATION OF REINFORCING SHALL TAKE PRECEDENCE OVER DEPICTED SPACING AND LOCATION.

E. STRUCTURAL STEEL

1. STRUCTURAL STEEL WIDE FLANGE SHAPES SHALL CONFORM TO ASTM A992.

2. OTHER STRUCTURAL STEEL SHAPES, PLATES AND BARS SHALL CONFORM TO ASTM A36.

3. HOLLOW STRUCTURAL SECTIONS SHALL CONFORM TO ASTM A500 GRADE B.

4. STRUCTURAL STEEL SHALL BE FABRICATED, ERECTED, AND CONNECTED IN COMPLIANCE WITH THE LATEST AISC SPECIFICATION FOR STRUCTURAL BUILDINGS.

5. SHOP PAINTING AND FIELD PAINTING, IF REQUIRED, SHALL BE DONE IN ACCORDANCE WITH THE SPECIFICATIONS.

6. SEE SPECIFICATION SECTION 05500 FOR ADDITIONAL REQUIREMENTS.

F. ANCHORS AND ADHESIVE DOWELS FOR CONCRETE

1. CAST–IN ANCHORS SHALL BE HEADED BOLTS CONFORMING TO ASTM F1554 AND GALVANIZED IN ACCORDANCE WITH ASTM A153, UNO.

2. POST–INSTALLED ANCHORS AND ADHESIVE DOWELS SHALL BE INSTALLED IN ACCORDANCE WITH THE MANUFACTURER'S RECOMMENDATIONS AND THE APPROPRIATE ICC EVALUATION SERVICE REPORTS. ONLY ANCHORS OR ADHESIVES WITH CURRENT ICC EVALUATION SERVICE REPORTS AVAILABLE FOR DOWNLOAD ON THE ICC WEBSITE SHALL BE USED. SEE SPECIFICATION SECTION 05500 FOR ADDITIONAL INFORMATION.

3. THE CONTRACTOR SHALL LOCATE EXISTING CONCRETE REINFORCEMENT USING NON–DESTRUCTIVE METHODS PRIOR TO DRILLING HOLES FOR POST–INSTALLED ANCHORS OR DOWELS. ADJUST SPACING OF ANCHORS TO MISS EXISTING REINFORCING. THE TOTAL NUMBER OF ANCHORS PROVIDED SHALL BE EQUAL TO WHAT IS SHOWN ON THE DRAWINGS OR EQUIPMENT ANCHORAGE SHOP DRAWINGS.

4. POST–INSTALLED ANCHORS SHALL NOT BE USED FOR VIBRATORY LOADS, UNO.

G. CONCRETE JOINTS

1. WATERSTOPS SHALL BE PROVIDED IN JOINTS WHERE SHOWN ON THE DRAWINGS AND WHERE INDICATED BY THE FOLLOWING:

a. IN ALL JOINTS IN WALLS AND SLABS OF LIQUID CONTAINMENT STRUCTURES TO PREVENT EXFILTRATION OF LIQUID INTO SOIL OR DRY AREAS OF THE STRUCTURE.

b. IN ALL BELOW–GRADE JOINTS IN WALLS AND SLABS TO PREVENT INFILTRATION OF GROUNDWATER INTO STRUCTURE.

2. MATERIAL FOR WATERSTOPS SHALL BE AS NOTED ON THE DRAWINGS AND IN ACCORDANCE WITH THE SPECIFICATIONS.

3. INTENTIONALLY ROUGHEN THE SURFACES OF CONSTRUCTION JOINTS AND WHERE NEW CONCRETE CONTACTS EXISTING CONCRETE TO A CONCRETE SURFACE PROFILE (CSP) 9 PER ICRI GUIDELINE 03732 WITH ¼" MINIMUM AMPLITUDE. THIS ROUGHENED SURFACE MAY BE ACCOMPLISHED BY RAKING THE PLASTIC CONCRETE OR BY BUSHHAMMERING OR CHISELING HARDENED CONCRETE SURFACES. THOROUGHLY CLEAN JOINT SURFACES OF LOOSE OR WEAKENED MATERIALS BY WATERBLASTING OR SANDBLASTING. SATURATE SURFACE WITH WATER 12 HOURS BEFORE AND AGAIN IMMEDIATELY PRIOR TO CONCRETE PLACEMENT.

©2012 CDM SMITH ALL RIGHTS RESERVED.
REUSE OF DOCUMENTS: THESE DOCUMENTS AND DESIGNS PROVIDED BY PROFESSIONAL SERVICE, INCORPORATED HEREIN, ARE THE PROPERTY OF CDM SMITH AND ARE NOT TO BE USED, IN WHOLE OR PART, FOR ANY OTHER PROJECT WITHOUT THE WRITTEN AUTHORIZATION OF CDM SMITH.
N:\ACAD2008\los osos\01-sheets\B\B-STR\ B-S-001 03/30/12 09:28 rushma XREFS: LosOsos-bdr, CA-CNO

REV. NO.	DATE	DRWN	CHKD	REMARKS

DESIGNED BY: CNO
DRAWN BY: TVN
CHECKED BY: LGS
DATE: APRIL 2012

CDM Smith
2295 Gateway Oaks Drive, Suite 240
Sacramento, CA 95833
Tel: (916) 567-9900

0 1/2 1
IF THIS BAR DOES NOT MEASURE 1" THEN ADJUST SCALE ACCORDINGLY

REGISTERED PROFESSIONAL ENGINEER CARLOS X. CRUZ-NOGUEZ No. C049615 Exp. 6/30/13 CIVIL STATE OF CALIFORNIA 4/2/2012

DIGALERT
DIAL TOLL FREE
1-800-642-2444
AT LEAST TWO DAYS BEFORE YOU DIG
UNDERGROUND SERVICE ALERT OF NORTHERN CALIFORNIA

LOS OSOS WASTEWATER COLLECTION SYSTEM

STRUCTURAL NOTES 1

PROJECT NO.42502-83120
FILE NAME: B-S-001
SHEET NO.
B-S-001

H. PRECAST CONCRETE

1. THE SUPPLIER OF THE PRECAST CONCRETE UNITS SHALL DESIGN AND PROVIDE DRAWINGS AND CALCULATIONS STAMPED AND SIGNED BY A PROFESSIONAL CIVIL OR STRUCTURAL ENGINEER REGISTERED IN THE STATE OF CALIFORNIA. THE DESIGN SHALL BE PER THE SPECIFICATIONS AND AS SHOWN IN THE DRAWINGS.

2. THE SUPPLIER SHALL COORDINATE WITH THE CONTRACTOR FOR THE SIZE AND LOCATION OF ALL ROOF AND WALL PENETRATIONS PRIOR TO FABRICATION.

I. SUBMERSIBLE PUMP STATION

1. REINFORCED CONCRETE PIPE AND DESIGN FOR THE CAISSON CONSTRUCTION PUMP STATIONS SHALL BE IN ACCORDANCE WITH SPECIFICATION SECTION 02612.

2. PVC LINING FOR THE PUMP STATION WALLS SHALL BE IN ACCORDANCE WITH SPECIFICATION SECTION 02765.

3. CAISSON CONSTRUCTION SHALL BE IN ACCORDANCE WITH SPECIFICATION SECTION 02355.

J. DEFERRED SUBMITTALS

1. THE FOLLOWING PORTIONS OF THE PROJECT ARE DEFERRED SUBMITTAL ITEMS & HAVE NOT BEEN DESIGNED BY THE ENGINEER OF RECORD.

   a) SUPPORT AND ANCHORAGE OF EQUIPMENT
   b) PRECAST MANHOLES
   c) PRECAST VAULTS
   d) PRECAST REINFORCED CONCRETE PIPE CAISSONS
   e) HS-20 ACCESS HATCHES

2. CALCULATIONS AND DRAWINGS OF DEFERRED SUBMITTAL ITEMS SHALL BE STAMPED BY A PROFESSIONAL CIVIL OR STRUCTURAL ENGINEER REGISTERED IN THE STATE OF CALIFORNIA.

3. DEFERRED SUBMITTAL ITEMS SHALL NOT BE INSTALLED UNTIL THE ENGINEER OF RECORD HAS REVIEWED THE SUBMITTAL DOCUMENTS AND INDICATED THAT THEY HAVE BEEN REVIEWED AND THAT THEY HAVE BEEN FOUND TO BE IN GENERAL CONFORMANCE WITH THE DESIGN OF THE STRUCTURE.

K. ABBREVIATION NOTES

1. ABBREVIATIONS AND DESIGNATIONS FOR STEEL MEMBERS MAY BE FOUND IN THE CURRENT MANUAL OF STEEL CONSTRUCTION BY AISC.

2. WELDING SYMBOLS AND ABBREVIATIONS MAY BE FOUND IN AWS D1.1.

3. ABBREVIATIONS LISTED ARE FOR USE WITH STRUCTURAL DRAWINGS ONLY. SOME ABBREVIATIONS LISTED MAY NOT BE USED ON THE PLANS.

STRUCTURAL ABBREVIATIONS

ø	DIAMETER
AB	ANCHOR BOLT
ADDL	ADDITIONAL
AL	ALUMINUM
ALT	ALTERNATE(ING)
APPROX	APPROXIMATE(LY)
ARND	AROUND
BGS	BELOW GROUND SURFACE
BLDG	BUILDING
BLK	BLOCK(ING)
BO	BOTTOM OF
BOT	BOTTOM
BTWN	BETWEEN
CHKD	CHECKERED
CIRC	CIRCUMFERENTIAL
CJ	CONSTRUCTION JOINT
CJP	COMPLETE JOINT PENETRATION
CL, ℄	CENTERLINE
CTJ	CONTROL JOINT
CLR	CLEAR
COL	COLUMN
CONC	CONCRETE
CONN	CONNECTION
CONST	CONSTRUCTION
CONT	CONTINUOUS
CTR	CENTER (ED)
D	DEEP, DEPTH
DEMO	DEMOLITION
DET	DETAIL
DI	DUCTILE IRON
DIA	DIAMETER
DIAG	DIAGONAL
DIM	DIMENSION
DL	DEAD LOAD
DN	DOWN
DO.	DITTO
DR	DRAIN
DWG(S)	DRAWING(S)
DWL(S)	DOWEL(S)
EA	EACH
EB	EXPANSION BOLT
ECC	ECCENTRIC
EF	EACH FACE
EL	ELEVATION
EMBED	EMBEDMENT
EQ	EQUAL (LY)
EQPT	EQUIPMENT
EQUIV	EQUIVALENT
ES	EACH SIDE
ETC	ETCETERA
EW	EACH WAY
EXP	EXPANSION
EXST, (E)	EXISTING
EXT	EXTERIOR
f'c	CONCRETE COMPRESSIVE STRENGTH
FD	FLOOR DRAIN
FDN	FOUNDATION
FIG	FIGURE
FIN	FINISH (ED)
FL	FLOOR
FLEX	FLEXIBLE
FTG	FOOTING
GA	GAGE
GALV	GALVANIZED
GALVS	GALVANIZED STEEL
GR	GUARD RAIL
GRTG	GRATING
HDR	HEADER
H	HEIGHT
HOR	HORIZONTAL
HP	HIGH POINT
HR	HANDRAIL
HSB	HIGH STRENGTH BOLTS
ICC	INTERNATIONAL CODE COUNCIL
ID	INSIDE DIAMETER
I.F.	INSIDE FACE
INT	INTERIOR
INV	INVERT
JT	JOINT
JT FLR	JOINT FILLER
LG	LONG
LLH	LONG LEG HORIZONTAL
LLV	LONG LEG VERTICAL
LNTL	LINTEL
LONG.	LONGITUDINAL
LP	LOW POINT
LT	LEFT
MATL	MATERIAL
MAX	MAXIMUM
MFR	MANUFACTURER
MIN	MINIMUM
MOL	MAXIMUM OPERATING LEVEL
MTL	METAL
(N)	NEW
NOM	NOMINAL
NSG	NON-SHRINK GROUT
NTS	NOT TO SCALE
O/E	OR EQUAL
OC	ON CENTER
OD	OUTSIDE DIAMETER
O.F	OUTSIDE FACE
OPNG(S)	OPENING(S)
OPP	OPPOSITE
OPP HD	OPPOSITE HAND
OPT	OPTION (AL)
PJF	PREMOLDED JOINT FILLER
PL	PLATE
PREFAB	PRE-FABRICATED
PT	POINT
R	RISER
RAD	RADIUS
RD	ROOF DRAIN
REF	REFERENCE / REFER
REINF	REINFORCE (D, ING)
REQD	REQUIRED
REV	REVISION
RO	ROUGH OPENING
RT	RIGHT
SECT	SECTION
SHT	SHEET
SIM	SIMILAR
SL	SLOPE
SP	SPACE (S, ED)
SPEC	SPECIFICATION, SPECIFIED
SQ	SQUARE
SST	STAINLESS STEEL
SSW	SIDE SEAM WELD
STD	STANDARD
STL	STEEL
STRUC	STRUCTURE (S, URAL)
SYM	SYMMETRICAL
T	TREAD (S)
T&B	TOP AND BOTTOM
TD	TRENCH DRAIN
THK	THICK (NESS)
T.O.	TOP OF
TOC	TOP OF CONCRETE
TOS	TOP OF STEEL
T.O.W.	TOP OF WALL
TRNSV	TRANSVERSE
TSW	TOP SEAM WELD
TYP	TYPICAL
UNO	UNLESS NOTED OTHERWISE
VB	VAPOR BARRIER
VERT	VERTICAL
W	WIDE
W/	WITH
W/O	WITHOUT
WD	WIDTH / WOOD
WP	WORKING POINT
WPG	WATERPROOFING
WS	WATERSTOP
WT	WEIGHT
WWF	WELDED
WIRE	FABRIC

©2012 CDM SMITH ALL RIGHTS RESERVED.
REUSE OF DOCUMENTS: THESE DOCUMENTS AND DESIGNS PROVIDED BY PROFESSIONAL SERVICE, INCORPORATED HEREIN, ARE THE PROPERTY OF CDM SMITH AND ARE NOT TO BE USED, IN WHOLE OR PART, FOR ANY OTHER PROJECT WITHOUT THE WRITTEN AUTHORIZATION OF CDM SMITH.
N:\ACAD2008\los osos\01-sheets\B\B-STR\ B-S-002 03/29/12 16:34 rushma XREFS: LosOsos-bdr, CA-CNO

REV. NO.	DATE	DRWN	CHKD	REMARKS

DESIGNED BY: CNO
DRAWN BY: TVN
CHECKED BY: LGS
DATE: APRIL 2012

CDM Smith
2295 Gateway Oaks Drive, Suite 240
Sacramento, CA 95833
Tel: (916) 567-9900

0 1/2 1
IF THIS BAR DOES NOT MEASURE 1" THEN ADJUST SCALE ACCORDINGLY

REGISTERED PROFESSIONAL ENGINEER CHARLES K. OH No. C 77936 Exp. 6/30/13 CIVIL 6/2/2012 STATE OF CALIFORNIA

DIGALERT DIAL TOLL FREE 1-800-642-2444 AT LEAST TWO DAYS BEFORE YOU DIG
UNDERGROUND SERVICE ALERT OF NORTHERN CALIFORNIA

LOS OSOS WASTEWATER COLLECTION SYSTEM

STRUCTURAL NOTES 2

PROJECT NO.42502-83120
FILE NAME: B-S-002
SHEET NO.
B-S-002

LEGEND:

CLASS 2 PERMEABLE MATERIAL

STRUCTURAL FILL/ BACKFILL

UNDISTURBED EARTH OR SCARIFIED SOIL

CONCRETE FILL/ CONCRETE

GROUT

COVER PLATE

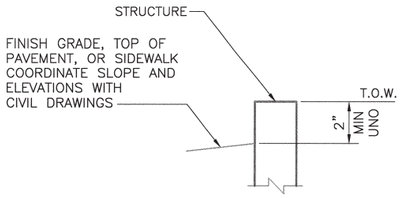

STRUCTURAL STANDARD DETAIL CALLOUT

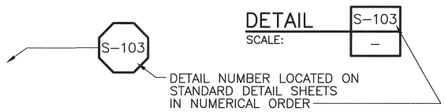

SECTION CALLOUT

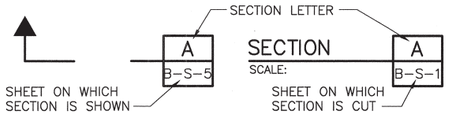

DETAIL CALLOUT

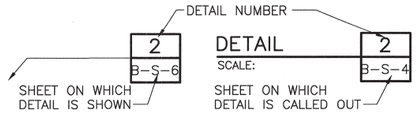

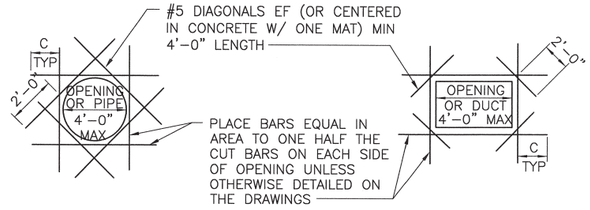

1. C = TENSION DEVELOPMENT LENGTH: PROVIDE STD HOOK IF FULL DEVELOPMENT LENGTH IS NOT POSSIBLE.

2. REINFORCING STEEL IS TO BE CARRIED ACROSS ALL CONSTRUCTION JOINTS.

3. DETAIL IS TYP FOR ALL OPENINGS GREATER THAN 10 INCHES IN CONCRETE WALLS AND SLABS UNLESS OTHERWISE DETAILED ON THE DRAWINGS.

4. EXTRA BARS ARE NOT REQUIRED AT AN OPENING EDGE PARALLEL TO AND WITHIN 6 INCHES OF A WALL OR BEAM, UNO.

EXTRA REINFORCEMENT AT CONCRETE OPENINGS

DETAIL S-110
SCALE: NONE –

	DEVELOPMENT LENGTH ld (INCHES)		LAP LENGTH (INCHES)	
REINF	TOP BAR	OTHER	TOP BAR	OTHER
#3	20	15	26	20
#4	22	17	28	22
#5	27	21	35	27
#6	32	25	42	32
#7	38	29	49	38
#8	43	33	56	43
#9	48	37	63	48

NOTES:

1. TOP BAR IS ANY HORIZ BAR WITH MORE THAN 12" CONCRETE CAST IN ONE LIFT BENEATH IT. HORIZONTAL BARS MAY OCCUR IN WALL OR A SLAB.

2. PROVIDE LAP LENGTHS PER ABOVE TABLE AT ALL SPLICES.

3. SPLICES IN HORIZONTAL BARS SHALL BE STAGGERED.

4. UNLESS OTHERWISE DETAILED ON THE DRAWINGS, SPLICES IN TWO CURTAINS SHALL NOT OCCUR IN THE SAME LOCATION.

5. BASED ON ACI 318-08 CHAP. 12 AND 21.

6. COMPRESSIVE STRENGTH OF CONCRETE, f'c, IS 5,000 psi.

LAP SPLICE LENGTH IN CONCRETE

DETAIL S-111
SCALE: NONE –

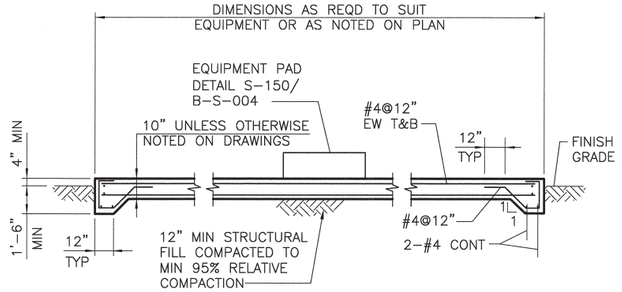

EXTERIOR EQUIPMENT SLAB

DETAIL S-114
SCALE: NONE –

©2012 CDM SMITH ALL RIGHTS RESERVED.
REUSE OF DOCUMENTS: THESE DOCUMENTS AND DESIGNS PROVIDED BY PROFESSIONAL SERVICE, INCORPORATED HEREIN, ARE THE PROPERTY OF CDM SMITH AND ARE NOT TO BE USED, IN WHOLE OR PART, FOR ANY OTHER PROJECT WITHOUT THE WRITTEN AUTHORIZATION OF CDM SMITH.
N:\ACAD2008\los osos\01-sheets\B\B-STR\ B-S-003 03/29/12 16:39 rushma XREFS: LosOsos-bdr, CA-CNO

REV. NO.	DATE	DRWN	CHKD	REMARKS

DESIGNED BY: CNO
DRAWN BY: TVN
CHECKED BY: LGS
DATE: APRIL 2012

CDM Smith
2295 Gateway Oaks Drive, Suite 240
Sacramento, CA 95833
Tel: (916) 567-9900

0 1/2 1
IF THIS BAR DOES NOT MEASURE 1" THEN ADJUST SCALE ACCORDINGLY

REGISTERED PROFESSIONAL ENGINEER CARLOS N. CRUZ No. C 77936 Exp. 6/30/13 CIVIL STATE OF CALIFORNIA 11/2/2012

DIGALERT DIAL TOLL FREE 1-800-642-2444 AT LEAST TWO DAYS BEFORE YOU DIG
UNDERGROUND SERVICE ALERT OF NORTHERN CALIFORNIA

LOS OSOS WASTEWATER COLLECTION SYSTEM

STANDARD STRUCTURAL DETAILS 1

PROJECT NO.42502-83120
FILE NAME: B-S-003
SHEET NO.
B-S-003

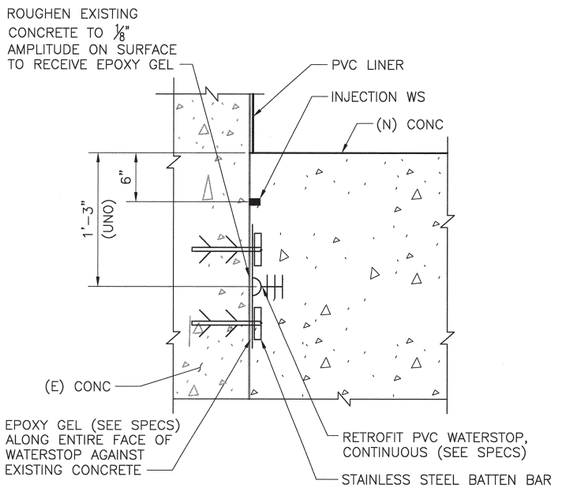

NOTES:

1. REINF NOT SHOWN FOR CLARITY.

WATERSTOP AT EXISTING SURFACE

DETAIL S-130
SCALE: NONE

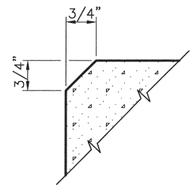

UNO ON DRAWINGS

CONCRETE CHAMFER

DETAIL S-140
SCALE: NONE

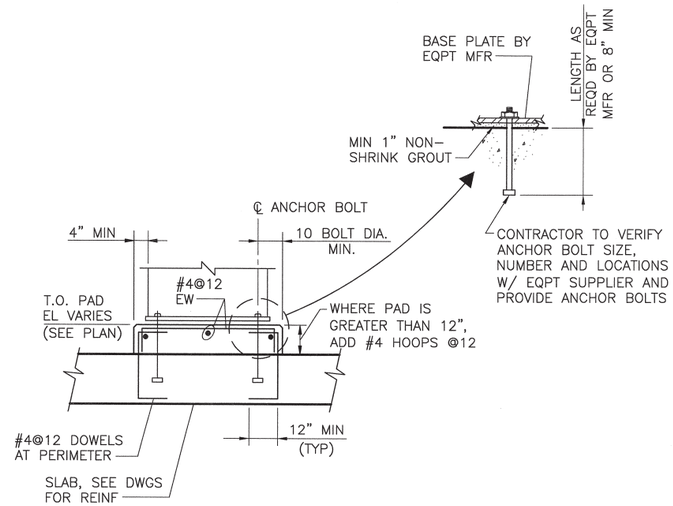

EQUIPMENT PAD

DETAIL S-150
SCALE: NONE

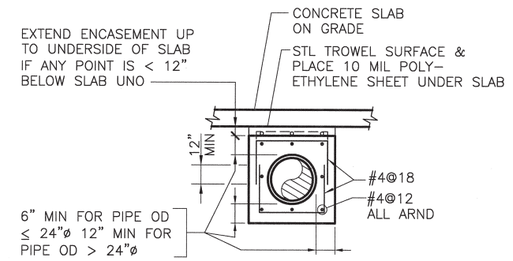

NOTE: CONCRETE ENCASEMENT SHALL EXTEND BEYOND STRUCTURE TO FIRST PIPE JOINT, UNO.

PIPE ENCASEMENT

DETAIL S-172
SCALE: NONE

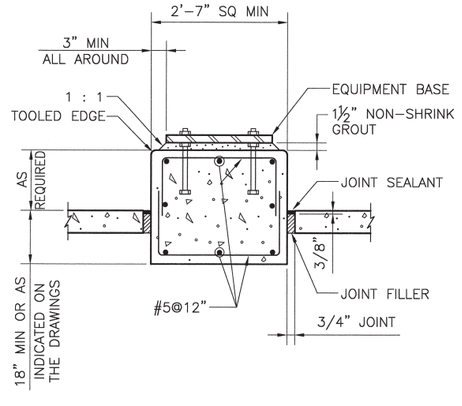

NOTE:

WHERE NO DIMENSION IS INDICATED ON THE DRAWINGS, BASE DEPTH SHALL BE SET SO THAT THE BASE WEIGHS AT LEAST THREE TIMES THE WEIGHT OF THE EQUIPMENT SUPPORTED.

EQUIPMENT BASE ON GRADE WITH SEPARATING JOINT

DETAIL S-193
SCALE: NONE

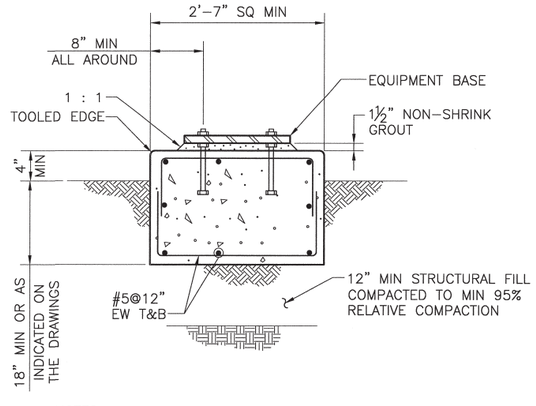

NOTES:

1. SUPPORTED EQUIPMENT SHALL NOT EXCEED 500 LBS OR 5'-0" IN HEIGHT.

2. WHERE NO DIMENSION IS INDICATED ON THE DRAWINGS, BASE DEPTH SHALL BE THE GREATER OF 1'-10" AND A DEPTH SUCH THAT THE BASE WEIGHS AT LEAST THREE TIMES THE WEIGHT OF THE EQUIPMENT SUPPORTED.

SMALL EQUIPMENT BASE ON GRADE

DETAIL S-194
SCALE: NONE

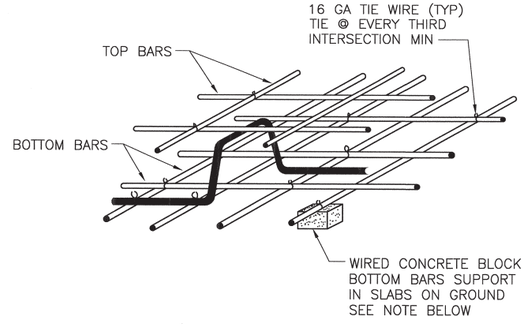

NOTE:

METAL BAR SUPPORTS, IF USED IN SLABS NOT ON GROUND, SHALL NOT MAKE CONTACT WITH FORMS.

REINFORCEMENT SUPPORT

DETAIL S-204
SCALE: NONE

REV. NO.	DATE	DRWN	CHKD	REMARKS

DESIGNED BY: CNO
DRAWN BY: TVN
CHECKED BY: LGS
DATE: APRIL 2012

CDM Smith
2295 Gateway Oaks Drive, Suite 240
Sacramento, CA 95833
Tel: (916) 567-9900

IF THIS BAR DOES NOT MEASURE 1" THEN ADJUST SCALE ACCORDINGLY

REGISTERED PROFESSIONAL ENGINEER CARLOS N. CRITCHLOW No. 60908 Exp. 6/30/13 CIVIL 6/3/2012 STATE OF CALIFORNIA

DIGALERT UNDERGROUND SERVICE ALERT
DIAL TOLL FREE 1-800-642-2444
AT LEAST TWO DAYS BEFORE YOU DIG
UNDERGROUND SERVICE ALERT OF NORTHERN CALIFORNIA

LOS OSOS WASTEWATER COLLECTION SYSTEM

STANDARD STRUCTURAL DETAILS 2

PROJECT NO.42502-83120
FILE NAME: B-S-004
SHEET NO.
B-S-004

©2012 CDM SMITH ALL RIGHTS RESERVED.
REUSE OF DOCUMENTS: THESE DOCUMENTS AND DESIGNS PROVIDED BY PROFESSIONAL SERVICE, INCORPORATED HEREIN, ARE THE PROPERTY OF CDM SMITH AND ARE NOT TO BE USED, IN WHOLE OR PART, FOR ANY OTHER PROJECT WITHOUT THE WRITTEN AUTHORIZATION OF CDM SMITH.
N:\ACAD2008\los osos\01-sheets\B-STR\ B-S-004 03/29/12 16:40 rushma XREFS: LosOsos-bdr, CA-CNO

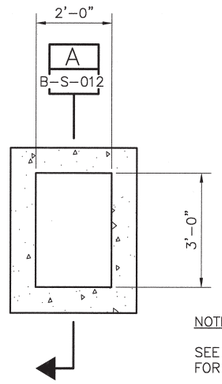

NOTE:

SEE CIVIL DRAWINGS FOR VAULT ORIENTATION.

PRECAST CLEANOUT VAULT FOUNDATION PLAN

SCALE: 1/2"=1'-0"

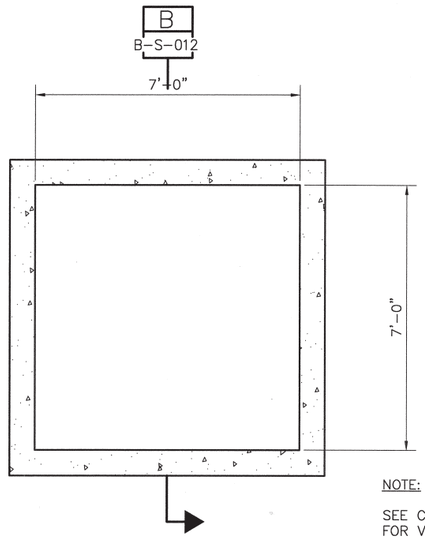

NOTE:

SEE CIVIL DRAWINGS FOR VAULT ORIENTATION.

PRECAST VALVE VAULT FOUNDATION PLAN

SCALE: 1/2"=1'-0"

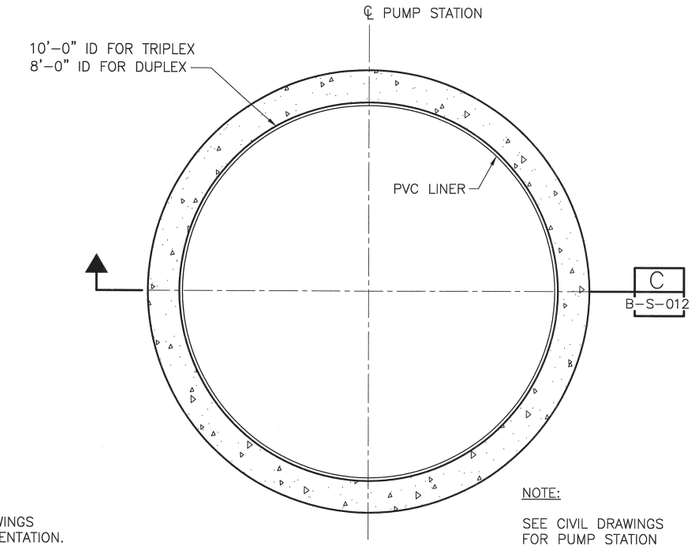

NOTE:

SEE CIVIL DRAWINGS FOR PUMP STATION ORIENTATION.

PUMP STATION FOUNDATION PLAN

SCALE: 1/2"=1'-0"

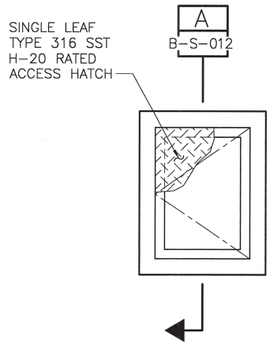

NOTE: COORDINATE VAULT PENETRATION SIZES AND LOCATIONS WITH CIVIL, MECHANICAL AND ELECTRICAL DRAWINGS.

PRECAST CLEANOUT VAULT TOP PLAN

SCALE: 1/2"=1'-0"

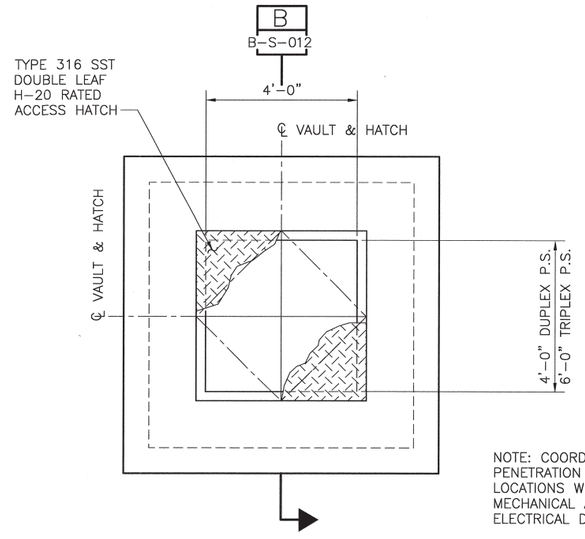

NOTE: COORDINATE VAULT PENETRATION SIZES AND LOCATIONS WITH CIVIL, MECHANICAL AND ELECTRICAL DRAWINGS.

PRECAST VALVE VAULT TOP PLAN

SCALE: 1/2"=1'-0"

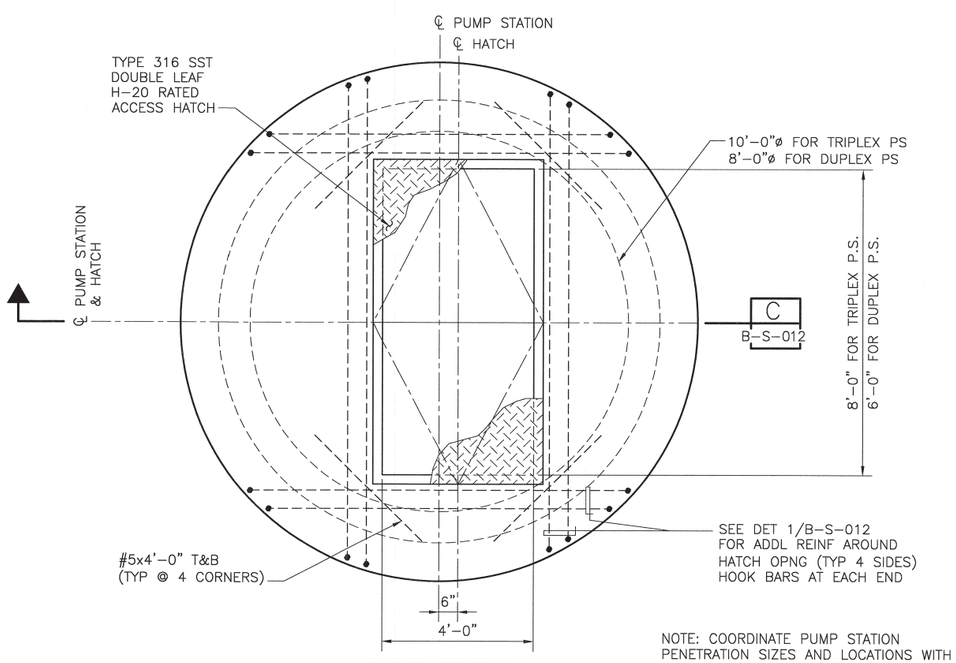

NOTE: COORDINATE PUMP STATION PENETRATION SIZES AND LOCATIONS WITH CIVIL, MECHANICAL AND ELECTRICAL DRAWINGS.

PUMP STATION TOP PLAN

SCALE: 1/2"=1'-0"

REV. NO.	DATE	DRWN	CHKD	REMARKS

DESIGNED BY: CNO
DRAWN BY: TVN
CHECKED BY: LGS
DATE: APRIL 2012

CDM Smith
2295 Gateway Oaks Drive, Suite 240
Sacramento, CA 95833
Tel: (916) 567-9900

0 1/2 1
IF THIS BAR DOES NOT MEASURE 1" THEN ADJUST SCALE ACCORDINGLY

REGISTERED PROFESSIONAL ENGINEER
No. C 77936
Exp. 6/30/13
4/2/2012
CIVIL
STATE OF CALIFORNIA

DIGALERT
DIAL TOLL FREE
1-800-642-2444
AT LEAST TWO DAYS BEFORE YOU DIG
UNDERGROUND SERVICE ALERT OF NORTHERN CALIFORNIA

LOS OSOS WASTEWATER COLLECTION SYSTEM

STRUCTURAL
SUBMERSIBLE PUMP STATIONS & VALVE VAULTS – FOUNDATION AND TOP PLANS

PROJECT NO.42502-83120
FILE NAME: B-S-011
SHEET NO.
B-S-011

©2012 CDM SMITH ALL RIGHTS RESERVED.
REUSE OF DOCUMENTS: THESE DOCUMENTS AND DESIGNS PROVIDED BY PROFESSIONAL SERVICE, INCORPORATED HEREIN, ARE THE PROPERTY OF CDM SMITH AND ARE NOT TO BE USED, IN WHOLE OR PART, FOR ANY OTHER PROJECT WITHOUT THE WRITTEN AUTHORIZATION OF CDM SMITH.
N:\ACAD2008\los osos\01-sheets\B\B-STR\ B-S-011 03/29/12 16:44 rushma XREFS: LosOsos-bdr, Submers-PSModels, CA-CNO

©2012 CDM SMITH ALL RIGHTS RESERVED.
REUSE OF DOCUMENTS: THESE DOCUMENTS AND DESIGNS PROVIDED BY PROFESSIONAL SERVICE, INCORPORATED HEREIN, ARE THE PROPERTY OF CDM SMITH AND ARE NOT TO BE USED, IN WHOLE OR PART, FOR ANY OTHER PROJECT WITHOUT THE WRITTEN AUTHORIZATION OF CDM SMITH.
N:\ACAD2008\los osos\01-sheets\B\B-STR\ B-S-012 03/29/12 16:46 rushma XREFS: LosOsos-bdr, Submers-PSModels, CA-CNO

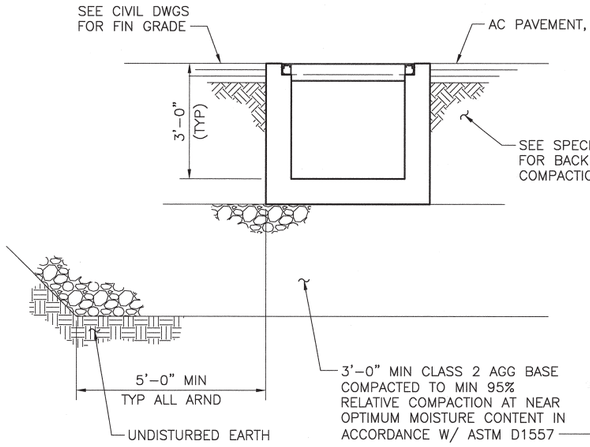

PRECAST CLEANOUT VAULT
SECTION A
SCALE: 1/2"=1' B-S-011

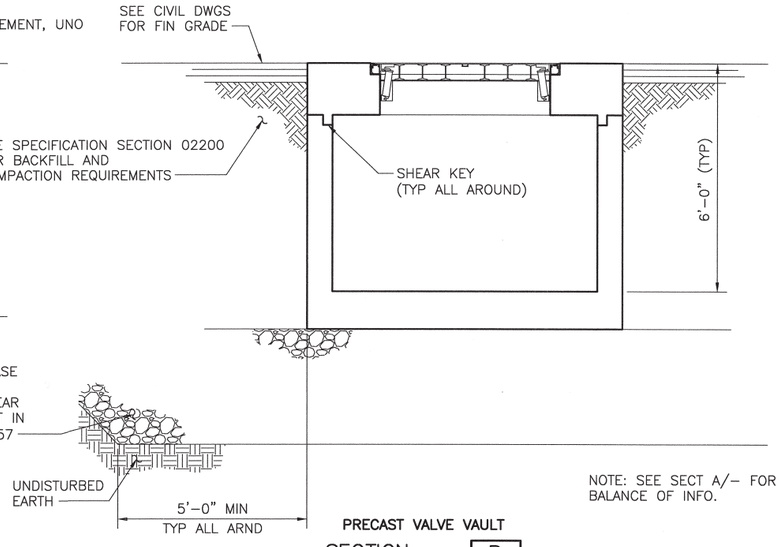

PRECAST VALVE VAULT
SECTION B
SCALE: 1/2"=1' B-S-011

NOTE: SEE SECT A/– FOR BALANCE OF INFO.

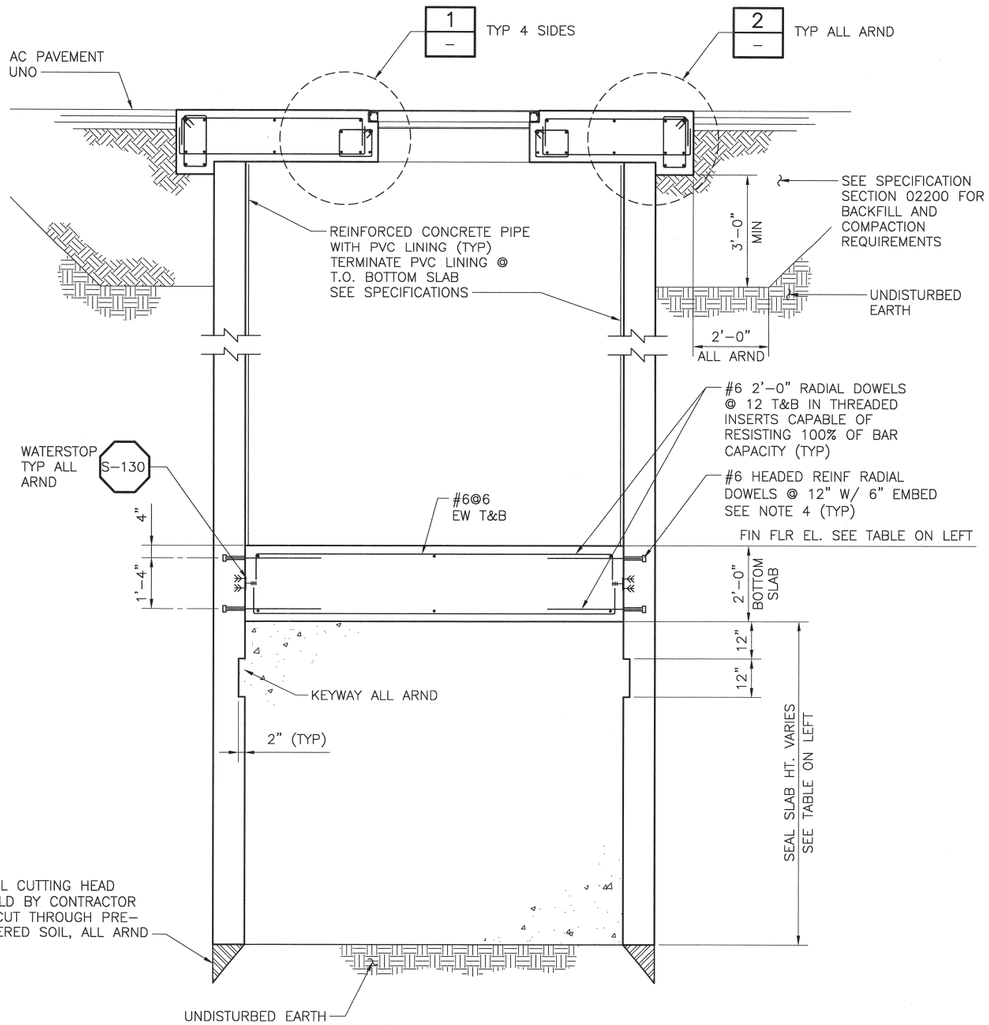

PUMP STATION
SECTION C
SCALE: 1/2"=1' B-S-011

DETAIL 1
SCALE: 1"=1' B-S-013,–

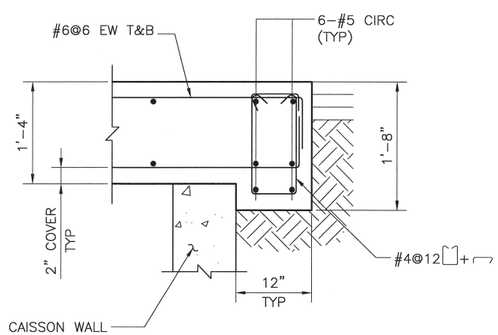

DETAIL 2
SCALE: 1"=1' B-S-013,–

NOTES:

1. ACCESS HATCH NOT SHOWN FOR CLARITY.

PUMP STATION	TRIPLEX	DUPLEX	
SITE LOCATION	MIDTOWN	SOLANO	LUPINE
SUBMERSIBLE PS FIN GRADE EL.	98.00'	15.60'	12.10'
SUBMERSIBLE PS FIN FLR EL.	76.30'	–1.80'	–9.70'
SUBMERSIBLE PS I.D.	10'–0"	8'–0"	8'–0"
MIN SEAL SLAB DEPTH	10'–0"	7'–6"	10'–0"

PUMP STATION SCHEDULE

NOTES:

1. REFER TO SPEC SECTION 02355 FOR PUMP STATION RECOMMENDED CHRONOLOGICAL SEQUENCED OF CONSTRUCTION AND ADD'L INFO.
2. REFER TO THE TABLE HEREIN FOR THE FINISHED GRADE ELEVATIONS AND FINISHED FLOOR ELEVATIONS OF THE WET WELL AT VARIOUS SITES.
3. 8' OR 10' INTERNAL DIA PRECAST CONCRETE SECTIONS USED FOR THE SUBMERSIBLE PUMP STATIONS SHALL BE REINFORCED CONCRETE PIPE PER ASTM C–76, CLASS III. REINFORCEMENT SHALL BE CIRCULAR. JOINTS SHALL BE STEEL FLUSH BELL WITH O–RING GASKET, CONFORMING TO ASTM C–361. SEE SPECIFICATION SECTION 02612 FOR ADDITIONAL REQUIREMENTS.
4. SEE SPECIFICATION 03200 FOR ADD'L INFORMATION ON HEADED REINF.

REV. NO.	DATE	DRWN	CHKD	REMARKS

DESIGNED BY: CNO
DRAWN BY: TVN
CHECKED BY: LGS
DATE: APRIL 2012

CDM Smith
2295 Gateway Oaks Drive, Suite 240
Sacramento, CA 95833
Tel: (916) 567-9900

0 1/2 1
IF THIS BAR DOES NOT MEASURE 1" THEN ADJUST SCALE ACCORDINGLY

REGISTERED PROFESSIONAL ENGINEER CARLOS N. ORTIZ No. C 77036 Exp. 6/30/13 CIVIL STATE OF CALIFORNIA

DIGALERT DIAL TOLL FREE 1-800-642-2444 AT LEAST TWO DAYS BEFORE YOU DIG
UNDERGROUND SERVICE ALERT OF NORTHERN CALIFORNIA

LOS OSOS WASTEWATER COLLECTION SYSTEM
STRUCTURAL SUBMERSIBLE PUMP STATIONS & VALVE VAULTS – SECTIONS AND DETAILS

PROJECT NO.42502–83120
FILE NAME: B–S–012
SHEET NO.
B–S–012

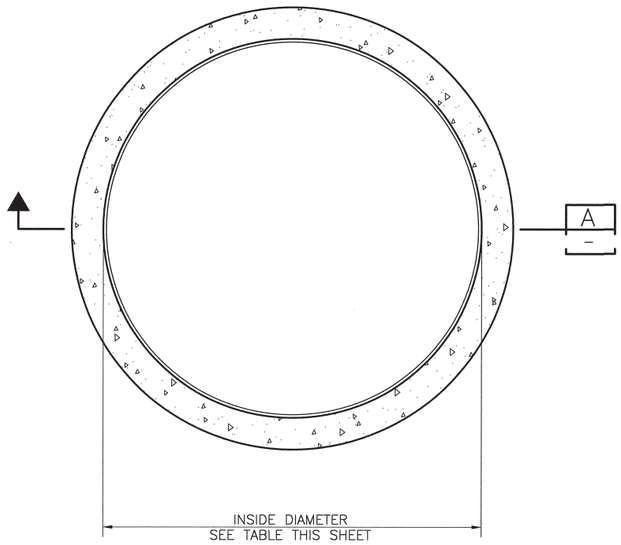

FOUNDATION PLAN
SCALE: 1/2"=1'–0"

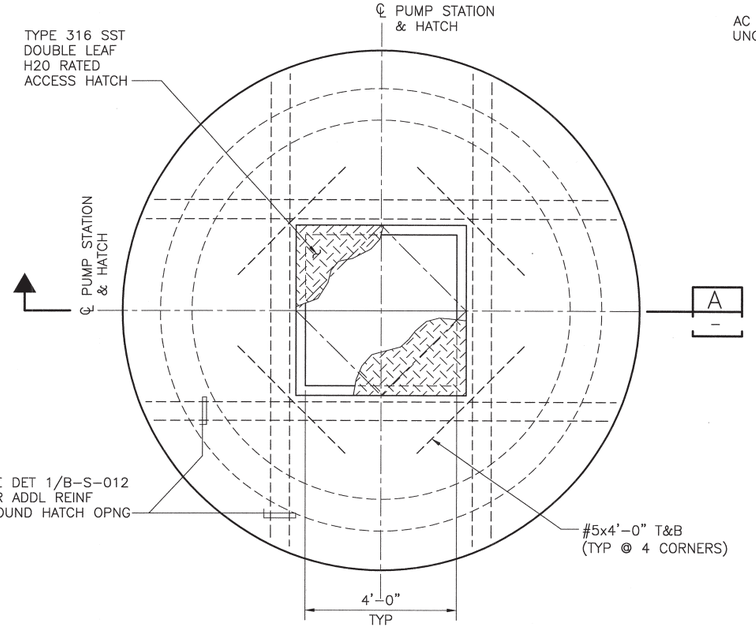

TOP PLAN
SCALE: 1/2"=1'–0"

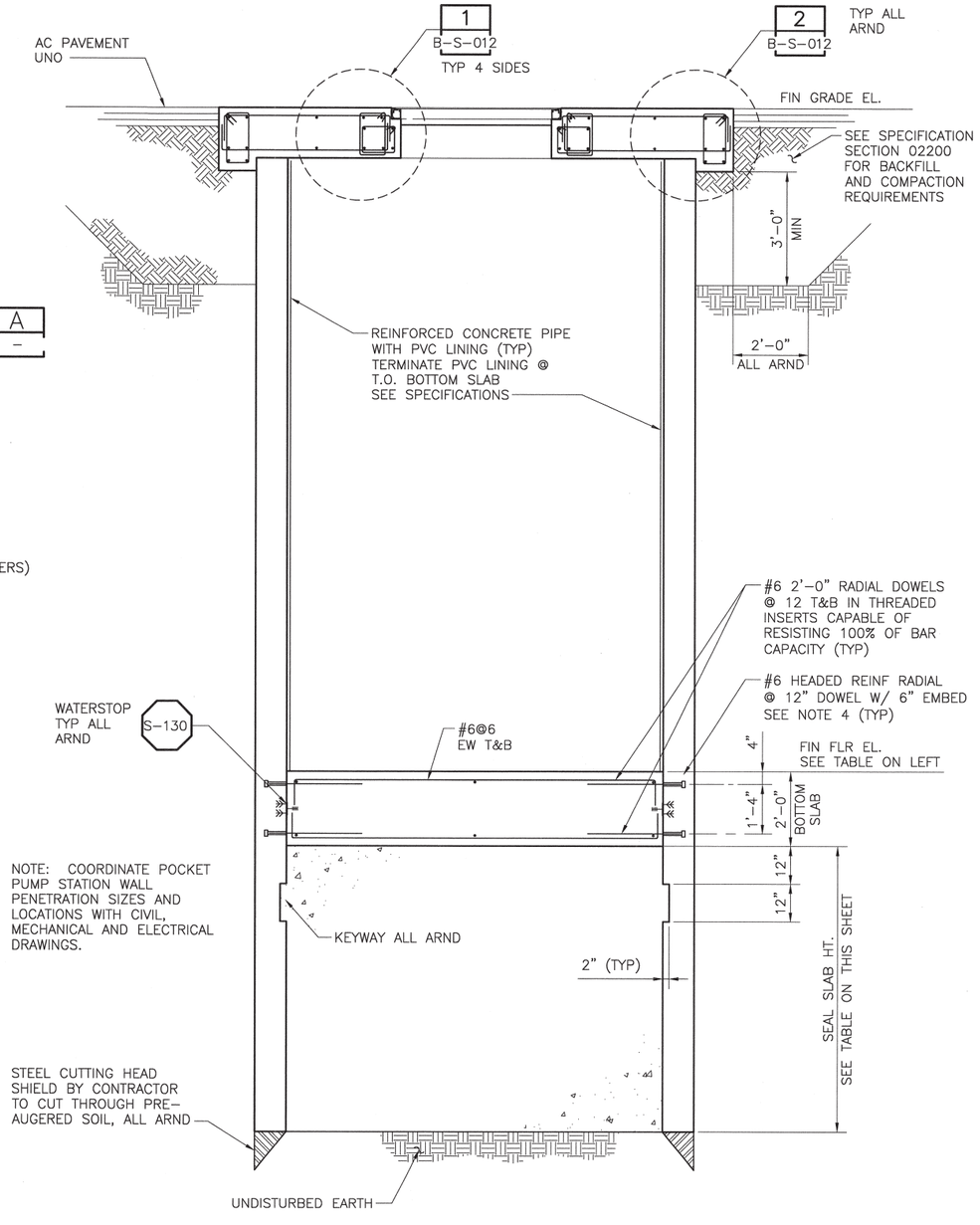

SECTION A
SCALE: 1/2"=1'

SITE LOCATION	5A
POCKET PS GRADE EL.	89.20'
POCKET PS FIN FLR EL.	71.66'
POCKET PS I.D.	10'–0"
MIN SEAL SLAB DEPTH	7'–6"

NOTES:

1. REFER TO SPEC SECTION 02355 FOR PUMP STATION RECOMMENDED CHRONOLOGICAL SEQUENCE OF CONSTRUCTION AND ADD'L INFO.
2. REFER TO THE TABLE HEREIN FOR THE GROUND ELEVATIONS AND FINISHED FLOOR ELEVATIONS OF THE WET WELL.
3. 8' OR 10' INTERNAL DIA PRECAST CONCRETE SECTIONS USED FOR THE SUBMERSIBLE PUMP STATIONS SHALL BE REINFORCED CONCRETE PIPE PER ASTM C–76, CLASS III. REINFORCEMENT SHALL BE CIRCULAR. JOINTS SHALL BE STEEL FLUSH BELL WITH O–RING GASKET, CONFORMING TO ASTM C–361. SEE SPECIFICATION SECTION 02612 FOR ADDITIONAL REQUIREMENTS.
4. SEE SPECIFICATION 03200 FOR ADD'L INFORMATION ON HEADED DOWELS.

©2012 CDM SMITH ALL RIGHTS RESERVED.
REUSE OF DOCUMENTS: THESE DOCUMENTS AND DESIGNS PROVIDED BY PROFESSIONAL SERVICE, INCORPORATED HEREIN, ARE THE PROPERTY OF CDM SMITH AND ARE NOT TO BE USED, IN WHOLE OR PART, FOR ANY OTHER PROJECT WITHOUT THE WRITTEN AUTHORIZATION OF CDM SMITH.
N:\ACAD2008\los osos\01–sheets\B\B–STR\ B–S–013 03/29/12 16:47 rushma XREFS: LosOsos–bdr, Pocket–PSModels, CA–CNO

REV. NO.	DATE	DRWN	CHKD	REMARKS

DESIGNED BY: CNO
DRAWN BY: TVN
CHECKED BY: LGS
DATE: APRIL 2012

CDM Smith
2295 Gateway Oaks Drive, Suite 240
Sacramento, CA 95833
Tel: (916) 567-9900

0 1/2 1
IF THIS BAR DOES NOT MEASURE 1" THEN ADJUST SCALE ACCORDINGLY

REGISTERED PROFESSIONAL ENGINEER CHARLES N. GRIM No. 77936 Exp. 6/30/13 5/2/2012 CIVIL STATE OF CALIFORNIA

DIGALERT DIAL TOLL FREE 1–800–642–2444 AT LEAST TWO DAYS BEFORE YOU DIG
UNDERGROUND SERVICE ALERT OF NORTHERN CALIFORNIA

LOS OSOS WASTEWATER COLLECTION SYSTEM
STRUCTURAL POCKET PUMP STATION PLANS AND SECTION

PROJECT NO.42502–83120
FILE NAME: B–S–013
SHEET NO.
B–S–013

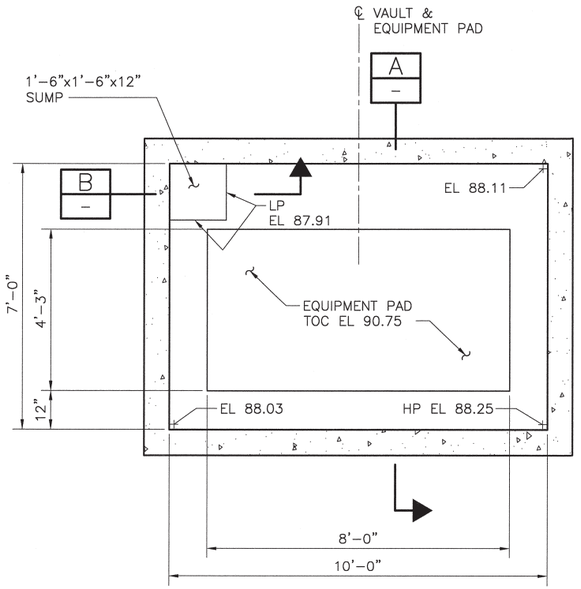

PRECAST ODOR CONTROL VAULT
FOUNDATION PLAN
SCALE: 1/2"=1'-0"

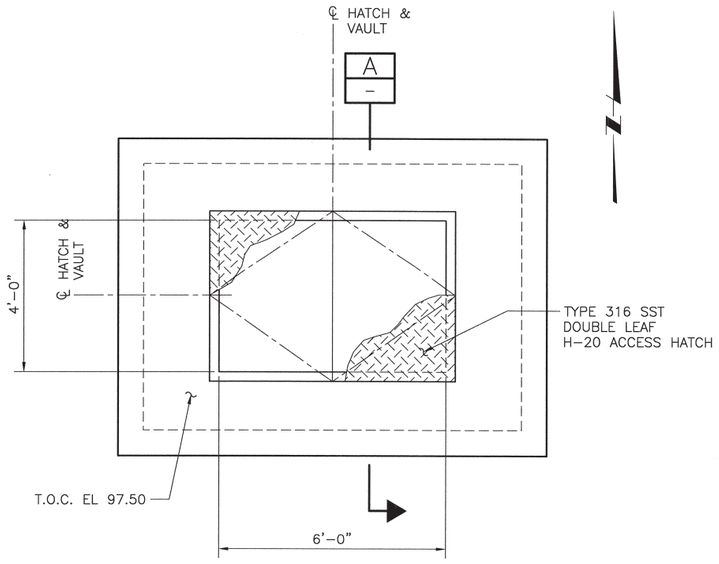

PRECAST ODOR CONTROL VAULT
TOP PLAN
SCALE: 1/2"=1'-0"

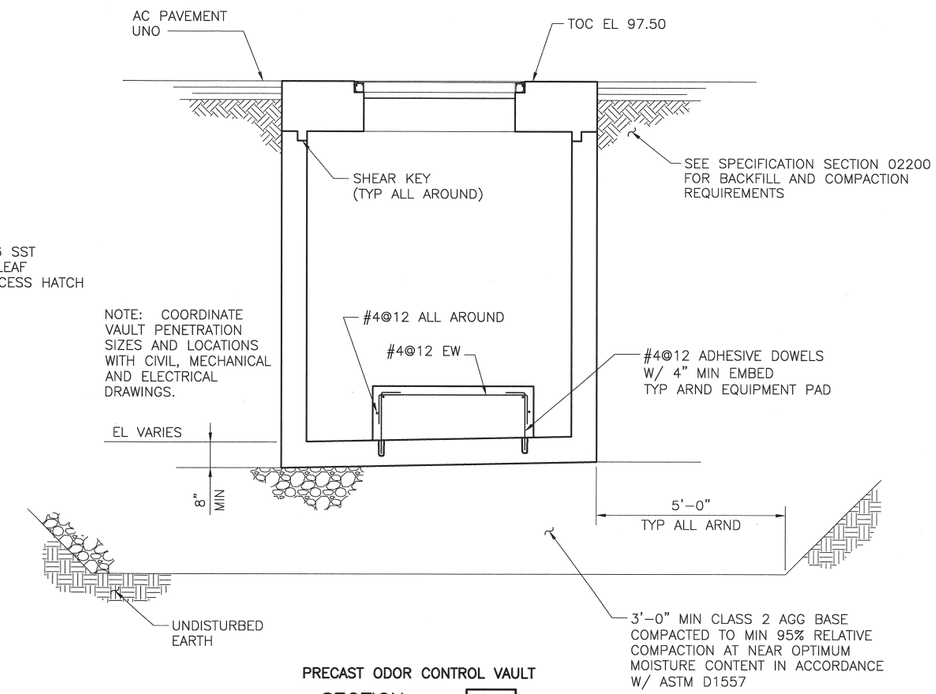

PRECAST ODOR CONTROL VAULT
SECTION A
SCALE: 1/2"=1'

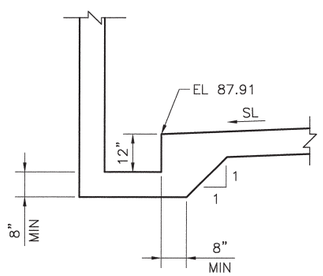

SECTION B
SCALE: 1/2"=1'

REV. NO.	DATE	DRWN	CHKD	REMARKS

DESIGNED BY: CNO
DRAWN BY: TVN
CHECKED BY: LGS
DATE: APRIL 2012

CDM Smith
2295 Gateway Oaks Drive, Suite 240
Sacramento, CA 95833
Tel: (916) 567-9900

0 1/2 1
IF THIS BAR DOES NOT MEASURE 1" THEN ADJUST SCALE ACCORDINGLY

REGISTERED PROFESSIONAL ENGINEER
CARLOS N. ORTIZ
No. C 77958
Exp. 6/30/13
4/2/2012
CIVIL
STATE OF CALIFORNIA

DIGALERT
DIAL TOLL FREE
1-800-642-2444
AT LEAST TWO DAYS BEFORE YOU DIG
UNDERGROUND SERVICE ALERT OF NORTHERN CALIFORNIA

LOS OSOS WASTEWATER COLLECTION SYSTEM
STRUCTURAL
ODOR CONTROL VAULT
PLANS AND SECTIONS

PROJECT NO.42502-83120
FILE NAME: B-S-014
SHEET NO.
B-S-014

©2012 CDM SMITH ALL RIGHTS RESERVED.
REUSE OF DOCUMENTS: THESE DOCUMENTS AND DESIGNS PROVIDED BY PROFESSIONAL SERVICE, INCORPORATED HEREIN, ARE THE PROPERTY OF CDM SMITH AND ARE NOT TO BE USED, IN WHOLE OR PART, FOR ANY OTHER PROJECT WITHOUT THE WRITTEN AUTHORIZATION OF CDM SMITH.
N:\ACAD2008\los osos\01-sheets\B\B-STR\ B-S-014 04/02/12 16:47 talbotwk XREFS: LosOsos-bdr, CA-CNO, OdorControlVault-PS-Models

NOTES:

1. REFER TO SPEC 16800 FOR SCOPE OF FIBER OPTIC AND POWER CONDUIT WORK INCLUDED IN THIS CONTRACT.
2. FIBER OPTIC SIZE LEGEND:

   FO-A = 2"

   FO-B = 4"
3. LUPINE PS TO EMH DUCTBANK SHALL INCLUDE:
   - (2) [2"C] POWER
   - (1) [1"C] CONTROL
   - (1) [1"C] SIGNAL

   LUPINE VALVE VAULT TO EMH DUCT BANK SHALL INCLUDE:
   (1) [1"C] CONTROL
4. SOLONO PS TO STANDBY POWER BUILDING DUCT BANK SHALL INCLUDE:
   - (2) [2"C] POWER
   - (1) [1"C] CONTROL
   - (1) [1"C] SIGNAL

   SOLONO VALVE VAULT TO STANDBY POWER BUILDING DUCT BANK SHALL INCLUDE:
   - (1) [1"C] CONTROL

   ALL CONDUITS SHALL EXTEND FROM PS/VALVE VAULT APPROXIMATELY 10' TOWARD STANDBY POWER BUILDING.
5. PPS-05A TO EMH DUCTBANK SHALL INCLUDE:
   - (2) [1"C] POWER
   - (2) [1"C] CONTROL
6. MIDTOWN PS DUCT BANK SHALL INCLUDE:
   - (3) [2"C] POWER
   - (1) [1"C] CONTROL
   - (1) [1"C] SIGNAL

   MIDTOWN VALVE VAULT DUCT BANK SHALL INCLUDE:
   - (1) [1"C] POWER

   MIDTOWN ODOR CONTROL DUCT BANK SHALL INCLUDE:
   - (1) [1"C] POWER
   - (1) [1"C] CONTROL

   ALL CONDUITS SHALL EXTEND TOWARD MCC/RTU PANEL AREA A MINIMUM OF 10'.

1" = 300'

LUPINE STANDBY POWER FACILITY
LUPINE PS
EMH (4'X4'X4'D MIN)
TYP ALL EMH UON E102
DORIS AVENUE
DONA AVE.
FERN AVE.
PINE AVENUE
TYP ALL "DB-#" CONDUITS UON E702 DB-201
NOTE 3
EMH (4'X4'X4'D MIN)
TYP ALL FOMH UON E104
TYP ALL "FO-A" CONDUITS UON E701
NANCY LANE
MAPLE AVE
SUMMIT
RAMONA AVE.
VINE St.
MITCHELL
BINSCARTH ROAD
LOMA ST.
Henrietta Ave
Ash St.
Skyline
Broderson Ave.
SAN LUIS AVENUE
PISMO
AREA A
AREA B
AREA C
AREA D
09B PPS
09C PPS
6 th St.
7 th St.
8 th St.
9 th St.
10 th St.
11 th St.
Farrell Ave.
Nipomo
Santa Ynez
Bush Dr
Bayview Heights Dr
Manzanita Dr.
Lilac Dr.
Mar Vista Dr.
Bay Oaks Dr
LOCSD OFFICE BUILDING
GROVE ST
BUTTE DRIVE
HENRIETTA
NEVADA
FOMH
NOTE 4
SOLANO PS
Howard Ave.
Monarch Lane
Inyo Street
Humbolt Street
Glenn Street
Fresno Street
El Dorado Street
Del Norte Street
Woodland Dr.
Manzanita Dr
Lilac Dr.
Mar Vista Dr.
Highland Drive
Los Osos Valley Rd.
PPS-05A
Palisades Ave
Ravena Ave.
MIDTOWN PS
TYP ALL "FO-B" CONDUITS UON E701
NOTE 5
TYP ALL MVMH UON E102
EMH (4'X4'X4'D MIN) AND MVMH (6'X4'X7'D MIN)
NOTE 6
DB-202
FOMH & MVMH (6'X4'X7'D MIN)

©2012 CDM SMITH ALL RIGHTS RESERVED.
COPYRIGHTS: THESE DOCUMENTS AND DESIGNS PROVIDED BY PROFESSIONAL SERVICE, INCORPORATED HEREIN, ARE THE PROPERTY OF CDM SMITH AND ARE NOT TO BE USED, IN WHOLE OR PART, FOR ANY OTHER PROJECT WITHOUT THE WRITTEN AUTHORIZATION OF CDM SMITH.
REUSE OF DOCUMENTS:
N:\ACAD2008\los osos\01-sheets\B\B-ELEC\ B-E-001 03/30/12 10:27 rushmo XREFS: LosOsos-bdr, loc_mdl, x-feet-row, Ca-col, AREA-C-MIDTOWN-PS, FIBER_OPTIC, X-PS-E-FO-02

REV. NO.	DATE	DRWN	CHKD	REMARKS

DESIGNED BY: CAL
DRAWN BY: JAW
CHECKED BY: GNM
DATE: APRIL 2012

CDM Smith
2295 Gateway Oaks Drive, Suite 240
Sacramento, CA 95833
Tel: (916) 567-9900

0 1/2 1
IF THIS BAR DOES NOT MEASURE 1" THEN ADJUST SCALE ACCORDINGLY

REGISTERED PROFESSIONAL ENGINEER CHARLES A. LINDSEY III Exp. 03/31/2014 ELECTRICAL STATE OF CALIFORNIA

DIGALERT DIAL TOLL FREE 1-800-642-2444 AT LEAST TWO DAYS BEFORE YOU DIG
UNDERGROUND SERVICE ALERT OF NORTHERN CALIFORNIA

LOS OSOS WASTEWATER COLLECTION SYSTEM

ELECTRICAL FIBER OPTIC AND POWER CONDUIT PLAN AREA B

PROJECT NO.42502-8312C
FILE NAME: B-E-001

SHEET NO.
B-E-001

©2012 CDM SMITH ALL RIGHTS RESERVED.
REUSE OF DOCUMENTS: THESE DOCUMENTS AND DESIGNS PROVIDED BY PROFESSIONAL SERVICE, INCORPORATED HEREIN, ARE THE PROPERTY OF CDM SMITH AND ARE NOT TO BE USED, IN WHOLE OR PART, FOR ANY OTHER PROJECT WITHOUT THE WRITTEN AUTHORIZATION OF CDM SMITH.
N:\ACAD2008\los osos\01-sheets\B\B-ELEC\ B-E-002 04/03/12 13:13 talbotwk XREFS: LosOsos-bdr, ELE-STD-DTLS, STD-DTLS, Ca-col, Ductbank_details

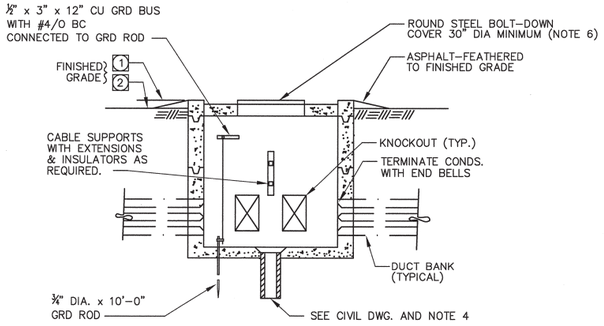

NOTES:

1 AT PAVED AREAS

2 UNPAVED AREAS.

3. PULL BOX INSTALLATION TO BE WATERTIGHT AFTER CONDUITS HAVE BEEN INSTALLED BY USING RAYCHEM RAYFLATE DUCT SEALING SYSTEM RDSS OR EQUAL.
4. FOR MANHOLE/PULL BOX NOT SHOWN WITH DRAINAGE PIPING ON CIVIL DRAWINGS, PROVIDE A MINIMUM OF 5FT OF 4" PD TO A 5FT CUBED TYPE DRAIN ROCK WITH FILTER FABRIC AROUND.
5. MANHOLE MINIMUM SIZE AS SHOWN ON DRAWINGS.
6. PROVIDE COLLAR OR CHIMNEY IF REQUIRED TO RAISE GRADE.

TYPICAL PULLBOX/MANHOLE — E-102

MORE THAN ONE CONDUIT IN A RUN

SINGLE CONDUIT RUN

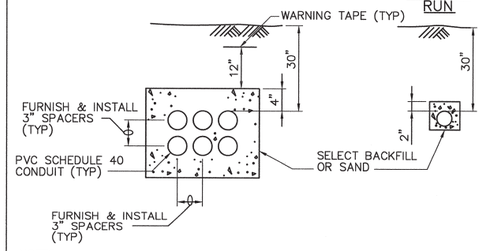

NOTES:

1. REFER TO DRAWINGS FOR ACTUAL CONDUIT SIZE AND NUMBER.

TYPICAL DUCTBANK — E-103

SELECT BACKFILL OR SAND

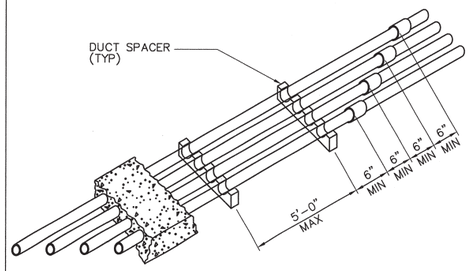

TYPICAL DUCTBANK — E-108

JOINT/SUPPORT SPACING REV 042999

DETAIL SHEET NOTES:

1. DETAILS SHALL BE USED IN ALL APPLICABLE LOCATIONS EVEN IF NOT SPECIFICALLY CALLED OUT ON THE DRAWINGS.

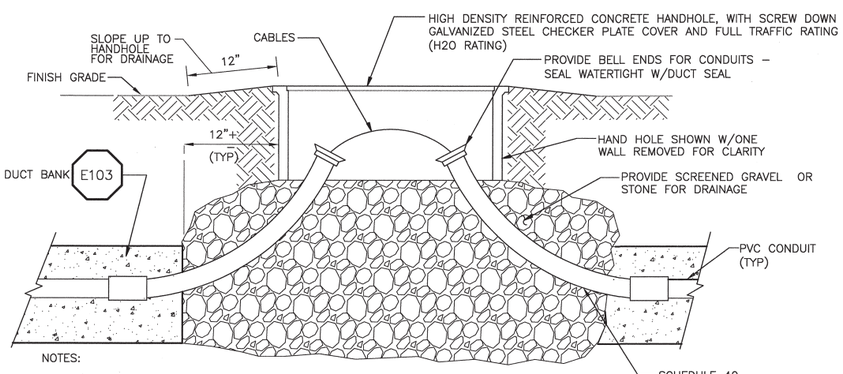

NOTES:

1. LIDS SHALL BE MARKED "FOMH" WITH ARC WELD OR SIMILAR PERMANANT METHOD.
2. NOMINAL MINIMUM INSIDE SIZE OF HANDHOLE 24"W X 36"L X 14"D UNLESS NOTED OTHERWISE. SEE SPECIFICATIONS FOR ADDITIONAL DETAIL.

TYPICAL FOMH (FIBER OPTIC MANHOLE) — E104

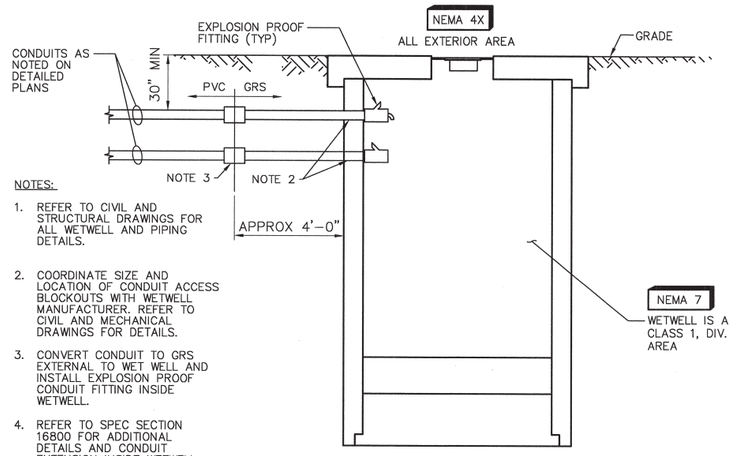

NOTES:

1. REFER TO CIVIL AND STRUCTURAL DRAWINGS FOR ALL WETWELL AND PIPING DETAILS.
2. COORDINATE SIZE AND LOCATION OF CONDUIT ACCESS BLOCKOUTS WITH WETWELL MANUFACTURER. REFER TO CIVIL AND MECHANICAL DRAWINGS FOR DETAILS.
3. CONVERT CONDUIT TO GRS EXTERNAL TO WET WELL AND INSTALL EXPLOSION PROOF CONDUIT FITTING INSIDE WETWELL.
4. REFER TO SPEC SECTION 16800 FOR ADDITIONAL DETAILS AND CONDUIT EXTENSION INSIDE WETWELL.

WET WELL & VALVE VAULT CONDUIT ENTRANCE (NOTE 1) — E-703

DB-201 DUCTBANK SCHEDULE

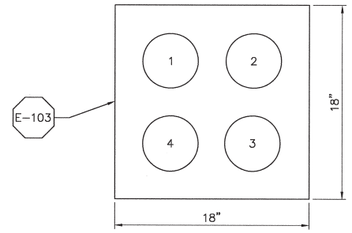

DUCT	CONDUIT	REMARKS
1	4"C; WITH WIRES PER NOTES 2 & 3	LU CONTROL
2	4"C; WITH WIRES PER NOTE 2	F.O.
3	4"C; WITH WIRES PER NOTE 2	LU-P-1 POWER
4	4"C; WITH WIRES PER NOTE 2	LU-P-2 POWER

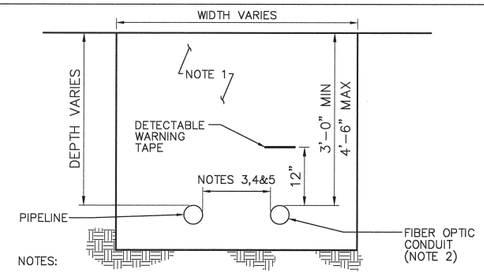

NOTES:

1. REFER TO CIVIL AND PIPELINE DRAWINGS FOR FOR ALL TRENCH DETAILS.
2. CONDUIT SIZE AS DETAILED ON ELECTRICAL AREA PLANS.
3. MINIMUM OFFSET FROM FORCE MAIN PIPE = 6".
4. MINIMUM OFFSET FROM GRAVITY SEWER = 3'-0".
5. MINIMUM OFFSET FROM ALL PIPELINE MANHOLE = 12"

FIBER OPTIC CONDUIT IN PIPELINE TRENCH — E-701

REV 011312

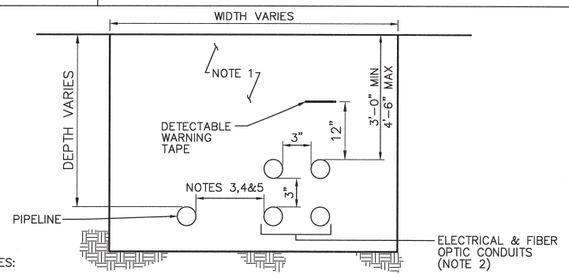

NOTES:

1. REFER TO CIVIL AND PIPELINE DRAWINGS FOR FOR ALL TRENCH DETAILS.
2. CONDUIT SIZE AS DETAILED ON ELECTRICAL AREA PLANS.
3. MINIMUM OFFSET FROM FORCE MAIN PIPE = 6".
4. MINIMUM OFFSET FROM GRAVITY SEWER = 3'-0".
5. MINIMUM OFFSET FROM ALL PIPELINE MANHOLE = 12"

POWER & FIBER OPTIC CONDUIT IN PIPELINE TRENCH — E-702

REV 011312

DB-202 DUCTBANK SCHEDULE

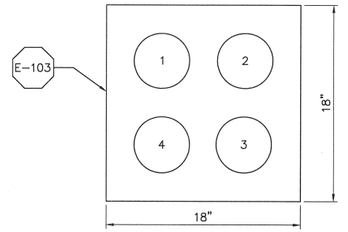

DUCT	CONDUIT	REMARKS
1	4"C;(3) #2-15KV 133% INSUL 105°C & (1) #2-600V INSUL GND	BW PS POWER
2	4"C	FIBER OPTIC
3	4"C	SPARE
4	4"C	SPARE

REV. NO.	DATE	DRWN	CHKD	REMARKS

DESIGNED BY: CAL
DRAWN BY: JAW
CHECKED BY: GNM
DATE: APRIL 2012

CDM Smith
2295 Gateway Oaks Drive, Suite 240
Sacramento, CA 95833
Tel: (916) 567-9900

0 1/2 1
IF THIS BAR DOES NOT MEASURE 1" THEN ADJUST SCALE ACCORDINGLY

REGISTERED PROFESSIONAL ENGINEER CHARLES M. LIVINGSTON No. E 8061 Exp. 3/31/2014 ELECTRICAL STATE OF CALIFORNIA

DIGALERT DIAL TOLL FREE 1-800-642-2444 AT LEAST TWO DAYS BEFORE YOU DIG
UNDERGROUND SERVICE ALERT OF NORTHERN CALIFORNIA

LOS OSOS WASTEWATER COLLECTION SYSTEM

ELECTRICAL DETAILS

PROJECT NO.42502-8312C
FILE NAME: B-E-002

SHEET NO.
B-E-002