DIST	COUNTY	ROUTE	POST MILES TOTAL PROJECT	SHEET No.	TOTAL SHEETS
05	SLO	101		236	290

REGISTERED STRUCTURAL ENGINEER

PLANS APPROVAL DATE

REGISTERED PROFESSIONAL ENGINEER PHILIP SHINN No. S4967 Exp. 12/31/10 STRUCTURAL STATE OF CALIFORNIA

The State of California or its officers or agents shall not be responsible for the accuracy or completeness of electronic copies of this plan sheet.

COUNTY OF SAN LUIS OBISPO
PUBLIC WORKS AND TRANSPORTATION DEPARTMENT
1050 MONTEREY STREET
SAN LUIS OBISPO, CA 93408

RAJAPPAN & MEYER
CONSULTING ENGINEERS, INC.
1038 LEIGH AVE, SUITE 100
SAN JOSE, CA 95126

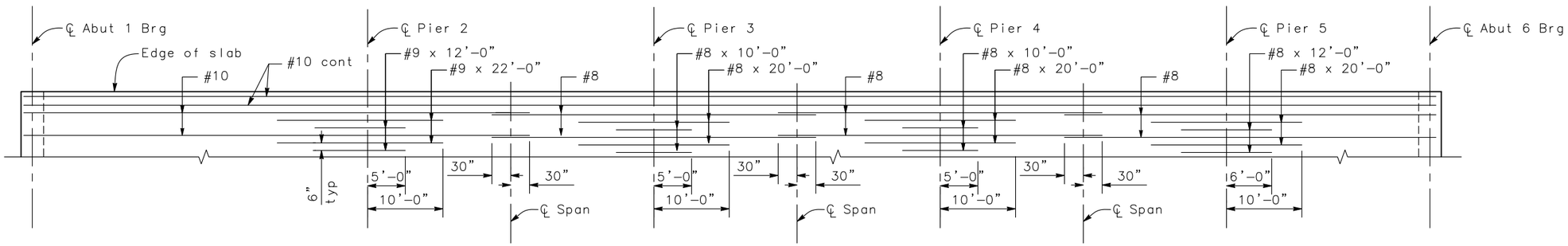

TOP SLAB REINFORCEMENT

No Scale

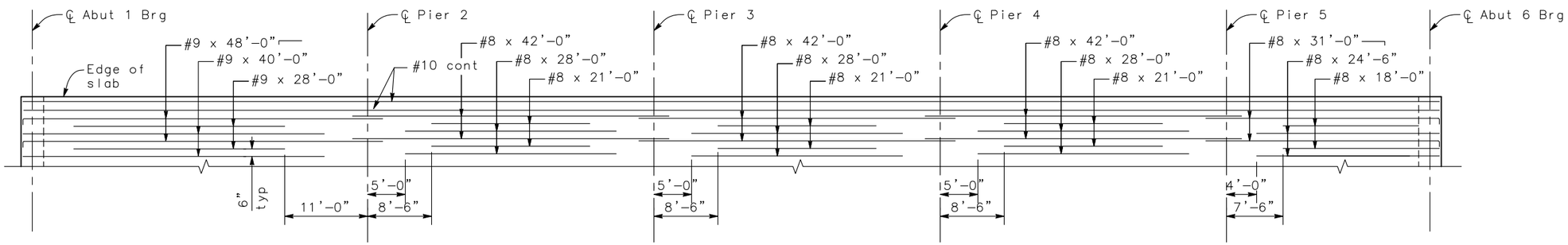

BOTTOM SLAB REINFORCEMENT

No Scale

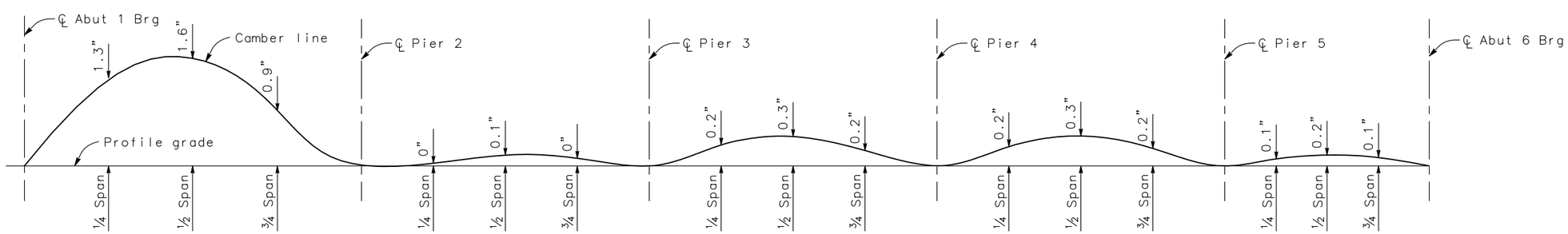

Does not include allawable for falsework deflection and settlemwnt.

CAMBER DIAGRAM

No Scale

THIS PLAN IS FOR BID ADDITIVE

THIS PLAN IS FOR COUNTY FACILITY

DESIGN OVERSIGHT	DESIGN	BY P. Shinn	CHECKED K. HARIRSAZ	PREPARED FOR THE STATE OF CALIFORNIA DEPARTMENT OF TRANSPORTATION	K. HARIRSAZ PROJECT ENGINEER
SIGN OFF DATE	DETAILS	BY P. Shinn	CHECKED K. HARIRSAZ		
	QUANTITIES	BY P. Shinn	CHECKED K. HARIRSAZ		

BRIDGE NO. N/A
POST MILES 6.45

NIPOMO CREEK BRIDGE
SLAB REINFORCEMENT

DESIGN DETAIL SHEET (ENGLISH) (REV. 2/25/05)

ORIGINAL SCALE IN INCHES FOR REDUCED PLANS 0 1 2 3

CU 05
EA 474501

DISREGARD PRINTS BEARING EARLIER REVISION DATES

REVISION DATES (PRELIMINARY STAGE ONLY): 5/2009 1/8/10 4/30/10 7/16/10

SHEET 8 OF 11

FILE => $REQUEST

USERNAME => $USER DATE PLOTTED => $DATE TIME PLOTTED => $TIME

DIST	COUNTY	ROUTE	POST MILES TOTAL PROJECT	SHEET No.	TOTAL SHEETS
05	SLO	101		237	290

REGISTERED STRUCTURAL ENGINEER

PLANS APPROVAL DATE

REGISTERED PROFESSIONAL ENGINEER PHILIP SHINN No. S4967 Exp. 12/31/10 STRUCTURAL STATE OF CALIFORNIA

The State of California or its officers or agents shall not be responsible for the accuracy or completeness of electronic copies of this plan sheet.

COUNTY OF SAN LUIS OBISPO
PUBLIC WORKS AND TRANSPORTATION DEPARTMENT
1050 MONTEREY STREET
SAN LUIS OBISPO, CA 93408

RAJAPPAN & MEYER
CONSULTING ENGINEERS, INC.
1038 LEIGH AVE, SUITE 100
SAN JOSE, CA 95126

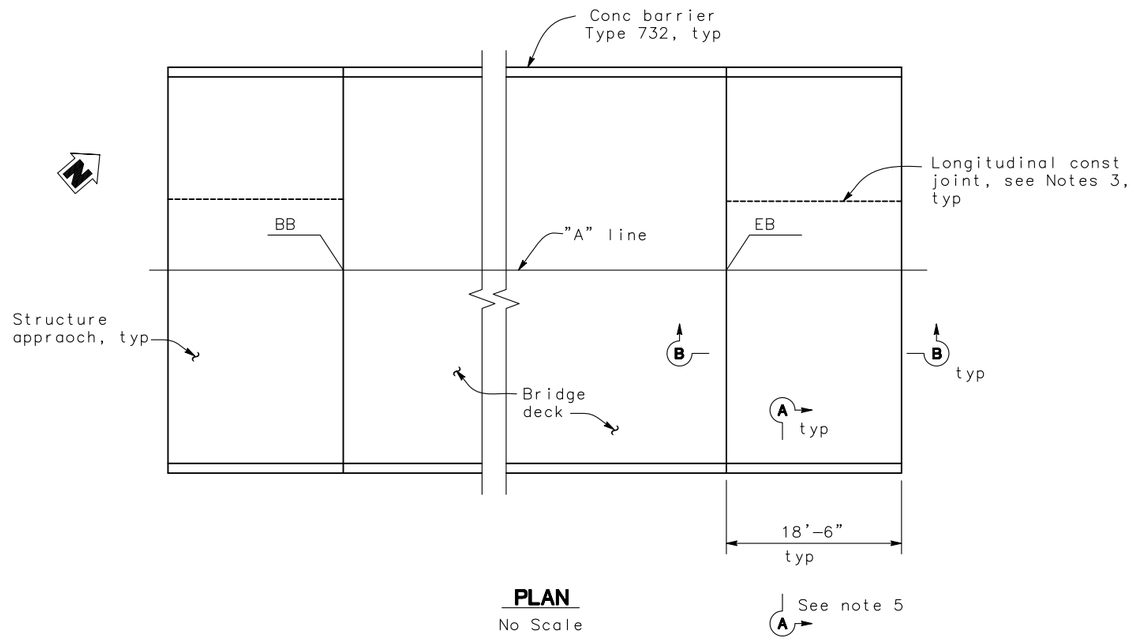

PLAN
No Scale

NOTES:

1. For details not noted or shown, see Structure Plans. Adjust bar reinforcement to clear a sawcut for sealed joint, when required.
2. For transverse contact joint with nee PCC paving, refer to Standard Plan P10.
3. Longitudinal construction joints, when permitted by the Engineer, shall be located on lane lines.
4. At the contractor's option, approach slab transverse reinforcement may be placed parallel to paving notch. Spacing of transverse reinforcement is measured along ℄ roadway.
5. For 'Section A-A', see "Abutment Details" sheet.

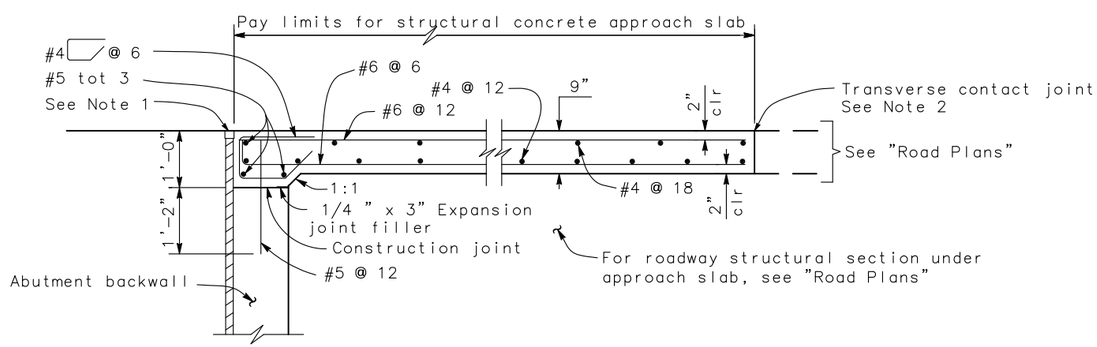

SECTION B-B
3/4" = 1'-0"

THIS PLAN IS FOR BID ADDITIVE

THIS PLAN IS FOR COUNTY FACILITY

DESIGN OVERSIGHT

SIGN OFF DATE

DESIGN	BY P. Shinn	CHECKED K. HARIRSAZ	
DETAILS	BY P. Shinn	CHECKED K. HARIRSAZ	
QUANTITIES	BY P. Shinn	CHECKED K. HARIRSAZ	

PREPARED FOR THE STATE OF CALIFORNIA DEPARTMENT OF TRANSPORTATION

K. HARIRSAZ
PROJECT ENGINEER

BRIDGE NO. N/A
POST MILES 6.45

NIPOMO CREEK BRIDGE
STRUCTURE APPROACH

DESIGN DETAIL SHEET (ENGLISH) (REV. 2/25/05)

ORIGINAL SCALE IN INCHES FOR REDUCED PLANS 0 1 2 3

CU 05
EA 474501

DISREGARD PRINTS BEARING EARLIER REVISION DATES

REVISION DATES (PRELIMINARY STAGE ONLY): 5/2009 1/8/10 4/30/10 7/16/10

SHEET 9 OF 11

FILE => $REQUEST

USERNAME => $USER DATE PLOTTED => $DATE TIME PLOTTED => $TIME

DIST	COUNTY	ROUTE	POST MILES TOTAL PROJECT	SHEET No	TOTAL SHEETS
05	SLO	RTE 101	–	238	290

GEOTECHNICAL PROFESSIONAL DATE

PLANS APPROVAL DATE

REGISTERED PROFESSIONAL ENGINEER GARY PARIKH No. G.E. 666 Exp. 12/31/09 GEOTECHNICAL STATE OF CALIFORNIA

The County of San Luis Obispo or its officers or agents shall not be responsible for the accuracy or completeness of electronic copies of this plan sheet.

PARIKH CONSULTANTS, INC.
2360 QUME DRIVE, SUITE A
SAN JOSE, CA 95131

REFERENCE: CALTRANS SOIL & ROCK LOGGING, CLASSIFICATION, AND PRESENTATION MANUAL (JUNE 2007)

GROUP SYMBOLS AND NAMES

Graphic/Symbol	Group Names	Graphic/Symbol	Group Names
GW	Well-graded GRAVEL Well-graded GRAVEL with SAND	CL	Lean CLAY Lean CLAY with SAND Lean CLAY with GRAVEL SANDY lean CLAY SANDY lean CLAY with GRAVEL GRAVELLY lean CLAY with SAND
GP	Poorly graded GRAVEL Poorly graded GRAVEL with SAND		
GW-GM	Well-graded GRAVEL with SILT Well-graded GRAVEL with SILT and SAND	CL-ML	SILTY CLAY SILTY CLAY with SAND SILTY CLAY with GRAVEL SANDY SILTY CLAY SANDY SILTY CLAY with GRAVEL GRAVELLY SILTY CLAY GRAVELLY SILTY CLAY with SAND
GW-GC	Well-graded GRAVEL with CLAY (or SILTY CLAY) Well-graded GRAVEL with CLAY and SAND (or SILTY CLAY and SAND)		
GP-GM	Poorly graded GRAVEL with SILT Poorly graded GRAVEL with SILT and SAND	ML	SILT SILT with SAND SILT with GRAVEL SANDY SILT SANDY SILT with GRAVEL GRAVELLY SILT GRAVELLY SILT with SAND
GP-GC	Poorly graded GRAVEL with CLAY (or SILTY CLAY) Poorly graded GRAVEL with CLAY and SAND (or SILTY CLAY and SAND)		
GM	SILTY GRAVEL SILTY GRAVEL with SAND	OL	ean CLAY with GRAVEL
GC	CLAYEY GRAVEL CLAYEY GRAVEL with SAND		
GC-GM	SILTY, CLAYEY GRAVEL SILTY, CLAYEY GRAVEL with SAND	OL	ORGANIC SILT ORGANIC SILT with SAND ORGANIC SILT with GRAVEL SANDY ORGANIC SILT SANDY ORGANIC SILT with GRAVEL GRAVELLY ORGANIC SILT GRAVELLY ORGANIC SILT with SAND
SW	Well-graded SAND Well-graded SAND with GRAVEL		
SP	Poorly graded SAND Poorly graded SAND with GRAVEL	CH	Fat CLAY Fat CLAY with SAND Fat CLAY with GRAVEL SANDY fat CLAY SANDY fat CLAY with GRAVEL GRAVELLY fat CLAY GRAVELLY fat CLAY with SAND
SW-SM	Well-graded SAND with SILT Well-graded SAND with SILT and GRAVEL		
SW-SC	Well-graded SAND with CLAY (or SILTY CLAY) Well-graded SAND with CLAY and GRAVEL (or SILTY CLAY and GRAVEL)	MH	Elastic SILT Elastic SILT with SAND Elastic SILT with GRAVEL SANDY elastic SILT SANDY elastic SILT with GRAVEL GRAVELLY elastic SILT GRAVELLY elastic SILT with SAND
SP-SM	Poorly graded SAND with SILT Poorly graded SAND with SILT and GRAVEL		
SP-SC	Poorly graded SAND with CLAY (or SILTY CLAY) Poorly graded SAND with CLAY and GRAVEL (or SILTY CLAY and GRAVEL)	OH	ORGANIC fat CLAY ORGANIC fat CLAY with SAND ORGANIC fat CLAY with GRAVEL
SM	SILTY SAND SILTY SAND with GRAVEL		GRAVELLY ORGANIC fa
SC	CLAYEY SAND CLAYEY SAND with GRAVEL	OH	ORGANIC elastic SILT ORGANIC elastic SILT with SAND ORGANIC elastic SILT with GRAVEL SANDY ORGANIC elastic SILT SANDY ORGANIC elastic SILT with GRAVEL GRAVELLY ORGANIC elastic SILT GRAVELLY ORGANIC elastic SILT with SAND
SC-SM	SILTY, CLAYEY SAND SILTY, CLAYEY SAND with GRAVEL		
PT	PEAT	OL/OH	ORGANIC SOIL ORGANIC SOIL with SAND ORGANIC SOIL with GRAVEL SANDY ORGANIC SOIL SANDY ORGANIC SOIL with GRAVEL GRAVELLY ORGANIC SOIL GRAVELLY ORGANIC SOIL with SAND
	COBBLES COBBLES and BOULDERS BOULDERS		

FIELD AND LABORATORY TESTING

- (C) Consolidation (ASTM D 2435)
- (CL) Collapse Potential (ASTM D 5333)
- (CP) Compaction Curve (CTM 216)
- (CR) Corrosivity Testing (CTM 643, CTM 422, CTM 417)
- (CU) Consolidated Undrained Triaxial (ASTM D 4767)
- (DS) Direct Shear (ASTM D 3080)
- (EI) Expansion Index (ASTM D 4829)
- (M) Moisture Content (ASTM D 2216)
- (OC) Organic Content-% (ASTM D 2974)
- (P) Permeability (CTM 220)
- (PA) Particle Size Analysis (ASTM D 422)
- (PI) Plasticity Index (AASHTO T 90) Liquid Limit (AASHTO T 89)
- (PL) Point Load Index (ASTM D 5731)
- (PM) Pressure Meter
- (PP) Pocket Penetrometer
- (R) R-Value (CTM 301)
- (SE) Sand Equivalent (CTM 217)
- (SG) Specific Gravity (AASHTO T 100)
- (SL) Shrinkage Limit (ASTM D 427)
- (SW) Swell Potential (ASTM D 4546)
- (TV) Pocket Torvane
- (UC) Unconfined Compression-Soil (ASTM D 2166) Unconfined Compression-Rock (ASTM D 2938)
- (UU) Unconsolidated Undrained Triaxial (ASTM D 2850)
- (UW) Unit Weight (ASTM D 4767)
- (VS) Vane Shear (AASHTO T 223)

APPARENT DENSITY OF COHESIONLESS SOILS

Description	SPT N_{60} (Blows / 12 inches)
Very loose	0 – 4
Loose	5 – 10
Medium Dense	11 – 30
Dense	31 – 50
Very Dense	> 50

MOISTURE

Description	Criteria
Dry	Absence of moisture, dusty, dry to the touch
Moist	Damp but no visible water
Wet	Visible free water, usually soil is below water table

PERCENT OR PROPORTION OF SOILS

Description	Criteria
Trace	Particles are present but estimated to be less than 5%
Few	5 to 10%
Little	15 to 25%
Some	30 to 45%
Mostly	50 to 100%

PARTICLE SIZE

Description		Size
Boulder		> 12"
Cobble		3" to 12"
Gravel	Coarse	3/4" to 3"
	Fine	No. 4 to 3/4"
Sand	Coarse	No. 10 to No. 4
	Medium	No. 40 to No. 10
	Fine	No. 200 to No. 40

CEMENTATION

Description	Criteria
Weak	Crumbles or breaks with handling or little finger pressure.
Moderate	Crumbles or breaks with considerable finger pressure.
Strong	Will not crumble or break with finger pressure.

CONSISTENCY OF COHESIVE SOILS

Description	Unconfined Compressive Strength (tsf)	Pocket Penetrometer Measurement (tsf)	Torvane Measurement (tsf)	Field Approximation
Very Soft	< 0.25	< 0.25	< 0.12	Easily penetrated several inches by fist
Soft	0.25 to 0.50	0.25 to 0.50	0.12 to 0.25	Easily penetrated several inches by thumb
Medium Stiff	0.50 to 1.0	0.50 to 1.0	0.25 to 0.50	Penetrated several inches by thumb with moderate effort
Stiff	1 to 2	1 to 2	0.50 to 1.0	Readily indented by thumb but penetrated only with great effort
Very Stiff	2 to 4	2 to 4	1.0 to 2.0	Readily indented by thumbnail
Hard	> 4.0	> 4.0	> 2.0	Indented by thumbnail with difficulty

PLASTICITY OF FINE-GRAINED SOILS

Description	Criteria
Nonplastic	A 1/8-inch thread cannot be rolled at any water content.
Low	The thread can barely be rolled and the lump cannot be formed when drier than the plastic limit.
Medium	The thread is easy to roll and not much time is required to reach the plastic limit. The thread cannot be rerolled after reaching the plastic limit. The lump crumbles when drier than the plastic limit.
High	It takes considerable time rolling and kneading to reach the plastic limit. The thread can be rerolled several times after reaching the plastic limit. The lump can be formed without crumbling when drier than the plastic limit.

BOREHOLE IDENTIFICATION

Symbol	Hole Type	Description
Size	A	Auger Boring
Size	R P	Rotary drilled boring Rotary percussion boring (air)
Size	R	Rotary drilled diamond core
Size	HD HA	Hand driven (1-inch soil tube) Hand Auger
●	D	Dynamic Cone Penetration Boring
▲	CPT	Cone Penetration Test (ASTM D 5778-95)
□	O	Other

Note: Size in inches.

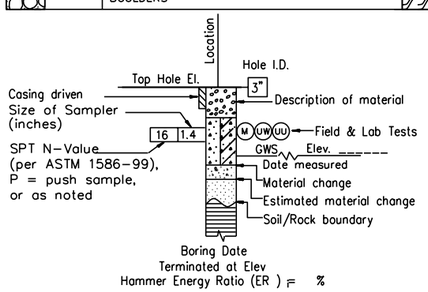

ROTARY BORING

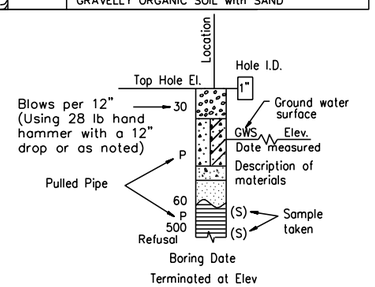

HAND BORING

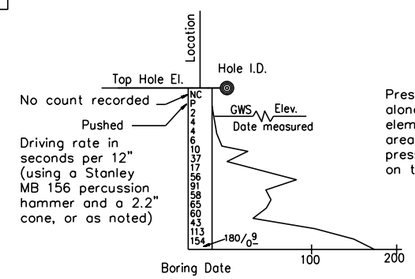

DYNAMIC CONE PENETRATION BORING

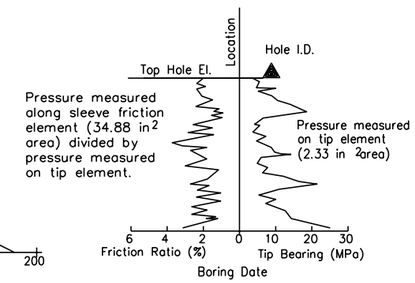

CONE PENETRATION TEST (CPT) SOUNDING

X
DESIGN OVERSIGHT

X
SIGN OFF DATE

DRAWN BY	LAM TRAN	L. Bhangoo FIELD INVESTIGATION BY:	
CHECKED BY	PERRY CHAN	DATE: Jan 2007	

PREPARED FOR THE
COUNTY OF SAN LUIS OBISPO
DEPARTMENT OF PUBLIC WORKS

PERRY CHAN
PROJECT ENGINEER

BRIDGE NO. –
POST MILE –

NIPOMO CREEK BRIDGE

LOG OF TEST BORINGS 1 OF 2

OSF GEOTECHNICAL LOG OF TEST BORINGS SHEET (ENGLISH) (REV. 2/25/05)

ORIGINAL SCALE IN INCHES FOR REDUCED PLANS 0 1 2 3

CU
EA

FILE => $REQUEST

DISREGARD PRINTS BEARING EARLIER REVISION DATES

REVISION DATES (PRELIMINARY STAGE ONLY) 07/10/09 SHEET OF

USERNAME => $USER

DIST	COUNTY	ROUTE	POST MILES TOTAL PROJECT	SHEET No	TOTAL SHEETS
05	SLO	RTE 101	–	239	290

GEOTECHNICAL PROFESSIONAL DATE

PLANS APPROVAL DATE

REGISTERED PROFESSIONAL ENGINEER GARY PARIKH No. G.E. 666 Exp. 12/31/09 GEOTECHNICAL STATE OF CALIFORNIA

The County of San Luis Obispo or its officers or agents shall not be responsible for the accuracy or completeness of electronic copies of this plan sheet.

PARIKH CONSULTANTS, INC.
2360 QUME DRIVE, SUITE A
SAN JOSE, CA 95131

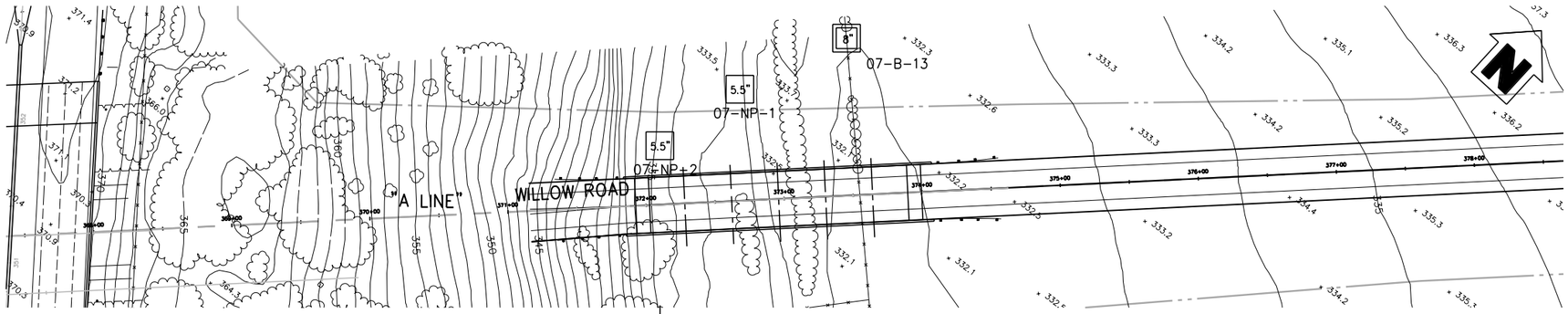

PLAN
1" = 50'

Notes:
Standard Penetration Test Sampler: I.D. = 1.4"; O.D. = 2"
Modified California Sampler: I.D. = 2.5"; O.D. = 3"
Hammer Assembly: A 140 lb hammer with a 30" drop

Borings 07-NP-2, 07-NP-1, and 07-B-13 were drilled in the county's right-of-way

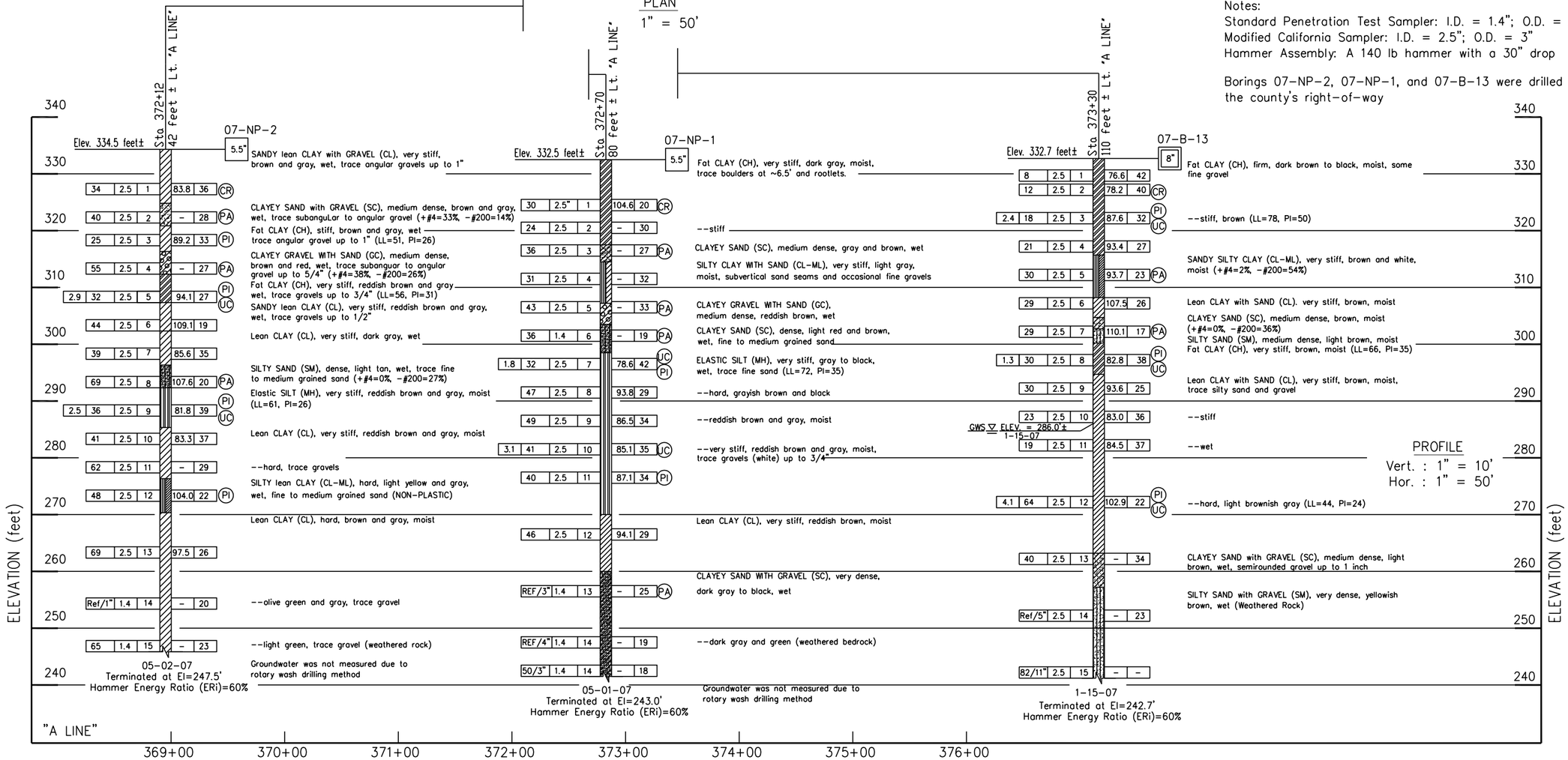

X DESIGN OVERSIGHT	DRAWN BY	LAM TRAN	L. Bhangoo FIELD INVESTIGATION BY:	PREPARED FOR THE COUNTY OF SAN LUIS OBISPO DEPARTMENT OF PUBLIC WORKS	PERRY CHAN PROJECT ENGINEER
X SIGN OFF DATE	CHECKED BY	PERRY CHAN	DATE: Jan 2007		

BRIDGE NO. –
POST MILE –

NIPOMO CREEK BRIDGE

LOG OF TEST BORINGS 2 OF 2

OSF GEOTECHNICAL LOG OF TEST BORINGS SHEET (ENGLISH) (REV. 2/25/05)

ORIGINAL SCALE IN INCHES FOR REDUCED PLANS 0 1 2 3

CU
EA

DISREGARD PRINTS BEARING EARLIER REVISION DATES 07/10/09

REVISION DATES (PRELIMINARY STAGE ONLY) SHEET OF

FILE => $REQUEST

USERNAME => $USER

DIST	COUNTY	ROUTE	POST MILES TOTAL PROJECT	SHEET No	TOTAL SHEETS
05	SLO	101	5.9/6.9	240	290

REGISTERED CIVIL ENGINEER — DATE 7/16/10

PLANS APPROVAL DATE

REGISTERED PROFESSIONAL ENGINEER ALLEN WANG No. C 66503 Exp. 06/30/12 CIVIL STATE OF CALIFORNIA

The State of California or its officers or agents shall not be responsible for the accuracy or completeness of scanned copies of this plan sheet.

COUNTY OF SAN LUIS OBISPO
PUBLIC WORKS AND TRANSPORTATION DEPARTMENT
1050 MONTEREY STREET
SAN LUIS OBISPO, CA 93408

RAJAPPAN & MEYER
CONSULTING ENGINEERS, INC.
1038 LEIGH AVE, SUITE 100
SAN JOSE, CA 95126

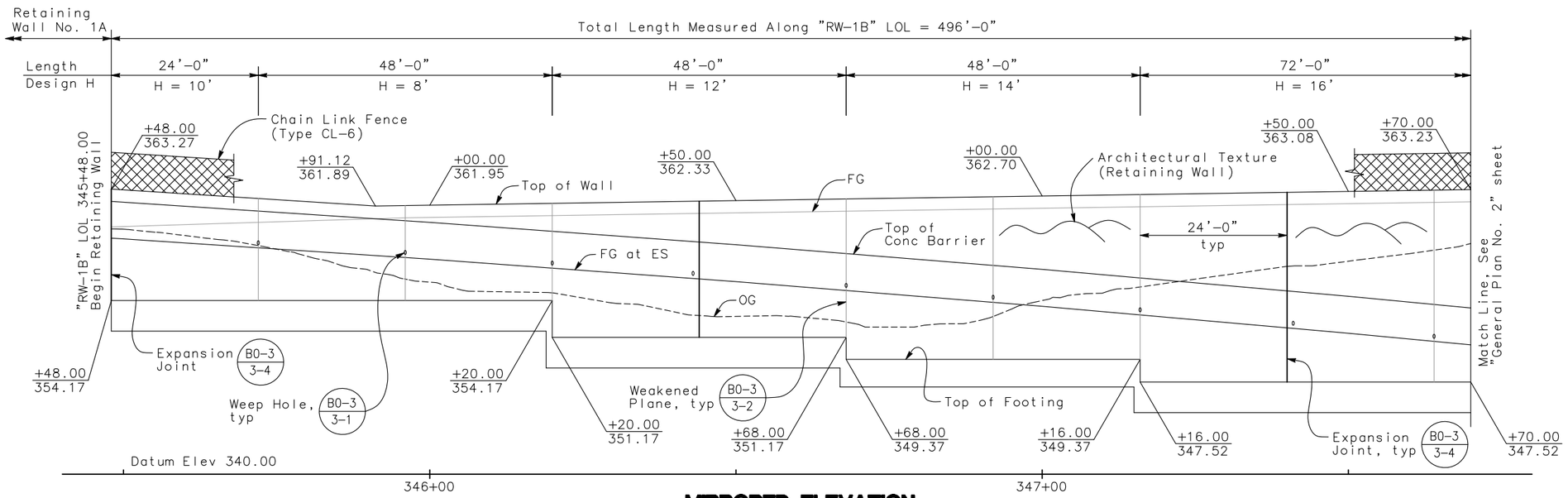

MIRRORED ELEVATION

Scale: Horiz 1" = 10'
Verti 1" = 5'

Notes:

1. Tiedown anchors are not required from "RW-1B" 345+48.00 to 346+68.00 and "RW-1B" 350+28.00 to 350+44.00.
2. Tiedown anchor spacing measured along "RW-1B" line.
3. For Index to Plans and List of Standard Plans, see "General Plan No. 3" sheet.

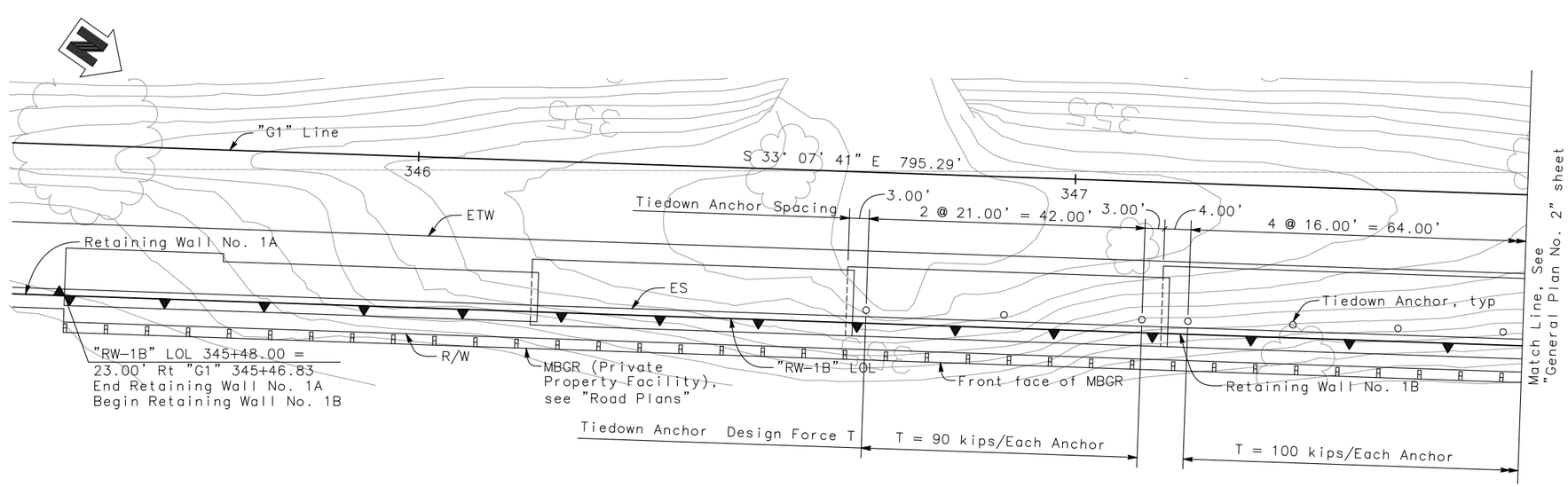

PLAN

Scale: 1" = 10'

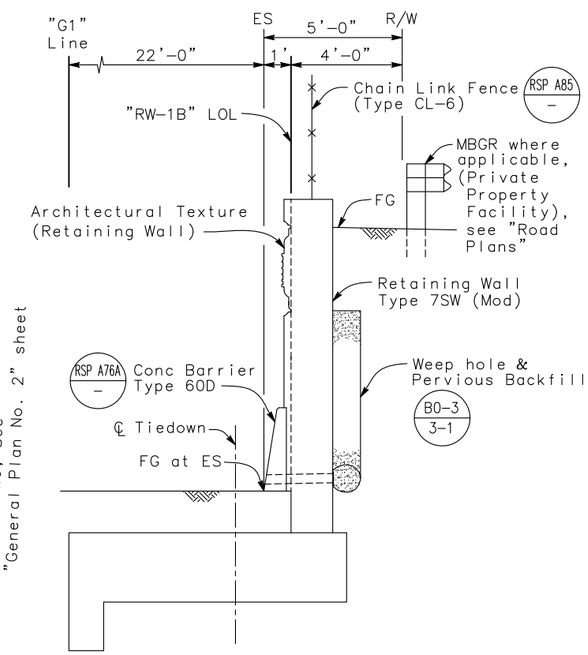

TYPICAL SECTION

"RW-1B" 345+48.00 to 347+88.00
No Scale

Note:
The Contractor shall verify all controlling field dimensions before ordering or fabricating any material

DESIGN OVERSIGHT	DESIGN	BY A. WANG	CHECKED P. SHINN	LOAD & RESISTANCE FACTOR DESIGN	LIVE LOADING: 240 psf SURCHARGE		
	DETAILS	BY W. Y. TAN	CHECKED P. SHINN	LAYOUT	BY A. WANG	CHECKED K. HARIRSAZ	
SIGN OFF DATE	QUANTITIES	BY W. Y. TAN	CHECKED B. NEDUNGADI	SPECIFICATIONS	BY K. HARIRSAZ	PLANS AND SPECS COMPARED K. HARIRSAZ	

PREPARED FOR THE STATE OF CALIFORNIA DEPARTMENT OF TRANSPORTATION

K. HARIRSAZ
PROJECT ENGINEER

BRIDGE NO. 49E0016
POST MILES 6.45

RETAINING WALL No. 1B
GENERAL PLAN No. 1

DESIGN GENERAL PLAN SHEET (ENGLISH) (REV. 06-01-09)

ORIGINAL SCALE IN INCHES FOR REDUCED PLANS 0 1 2 3

CU 05
EA 474501

FILE => $REQUEST

DISREGARD PRINTS BEARING EARLIER REVISION DATES

REVISION DATES (PRELIMINARY STAGE ONLY) 3/12/10 3/24/10 4/30/10 7/16/10

SHEET 1 OF 10

USERNAME => $USER DATE PLOTTED => $DATE TIME PLOTTED => $TIME

DIST	COUNTY	ROUTE	POST MILES TOTAL PROJECT	SHEET No	TOTAL SHEETS
05	SLO	101	5.9/6.9	241	290

REGISTERED CIVIL ENGINEER — DATE 7/16/10

PLANS APPROVAL DATE

REGISTERED PROFESSIONAL ENGINEER ALLEN WANG No. C 66503 Exp. 06/30/12 CIVIL STATE OF CALIFORNIA

The State of California or its officers or agents shall not be responsible for the accuracy or completeness of scanned copies of this plan sheet.

COUNTY OF SAN LUIS OBISPO
PUBLIC WORKS AND TRANSPORTATION DEPARTMENT
1050 MONTEREY STREET
SAN LUIS OBISPO, CA 93408

RAJAPPAN & MEYER
CONSULTING ENGINEERS, INC.
1038 LEIGH AVE, SUITE 100
SAN JOSE, CA 95126

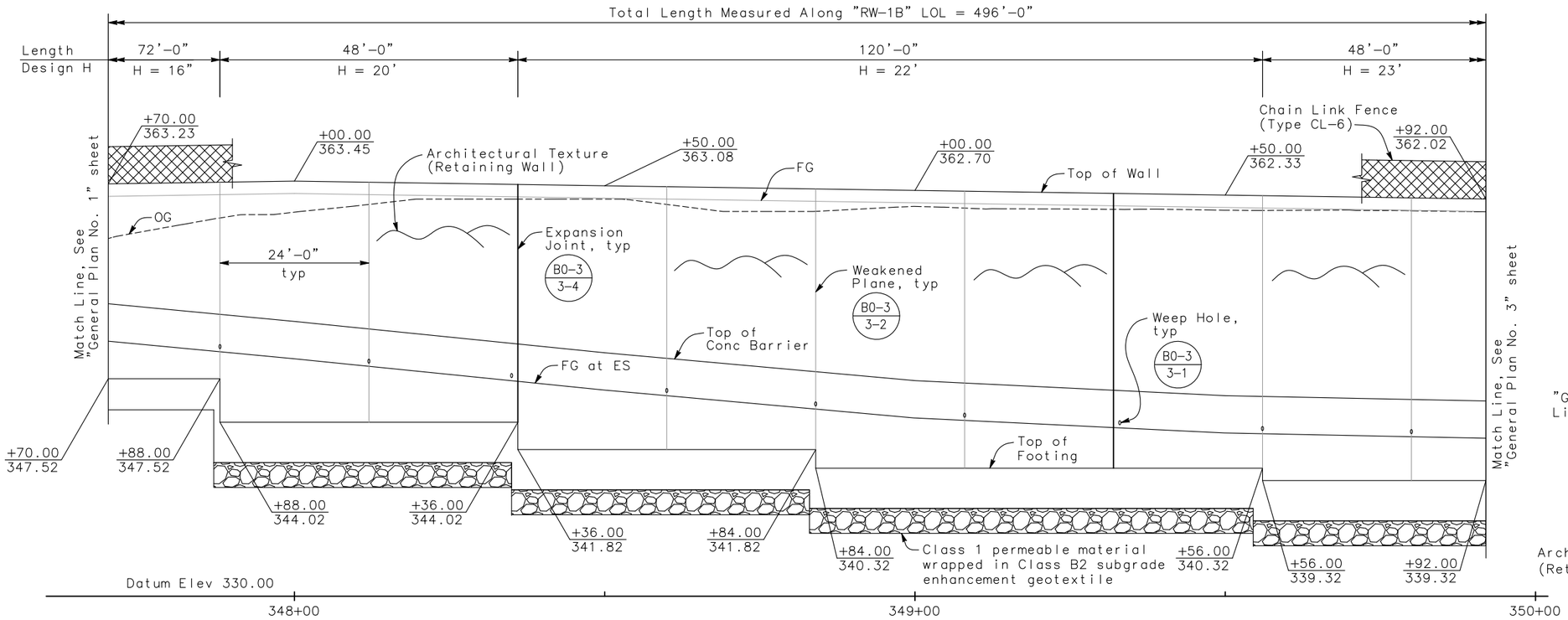

MIRRORED ELEVATION

Scale: Horiz 1" = 10'
Verti 1" = 5'

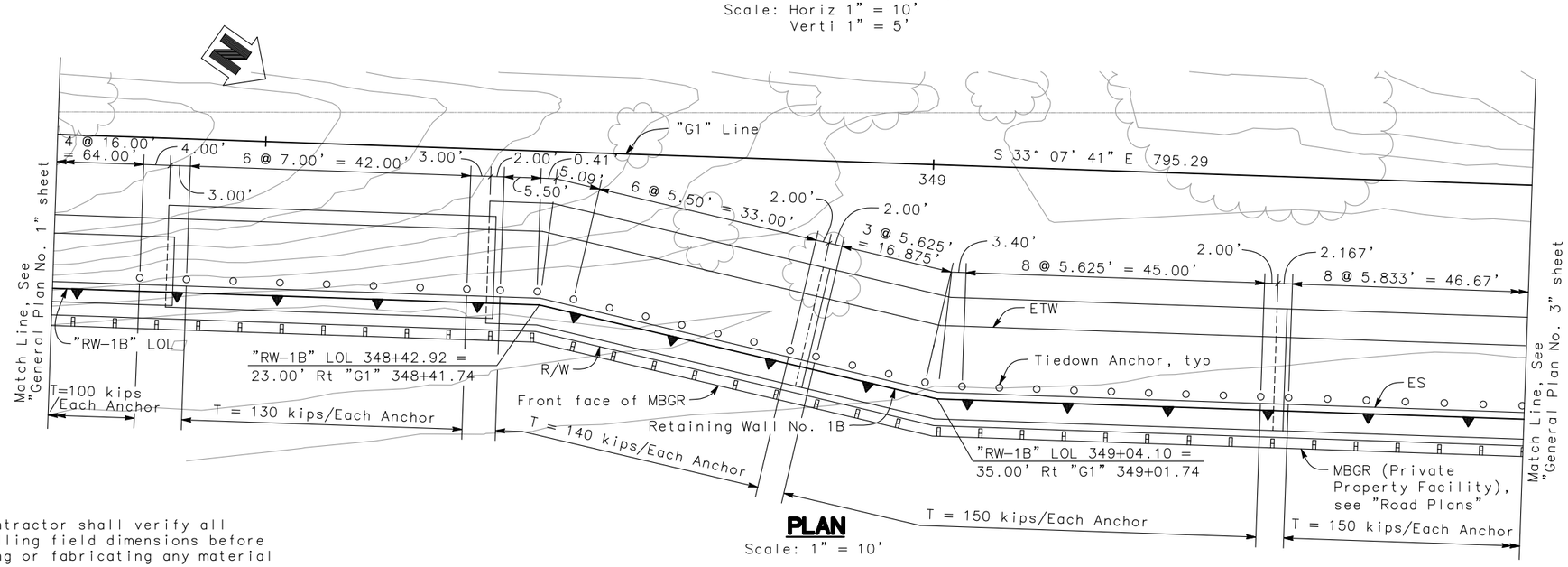

PLAN

Scale: 1" = 10'

Note:
The Contractor shall verify all controlling field dimensions before ordering or fabricating any material

Note:
Tiedown anchor spacing measured along "RW-1B" line.

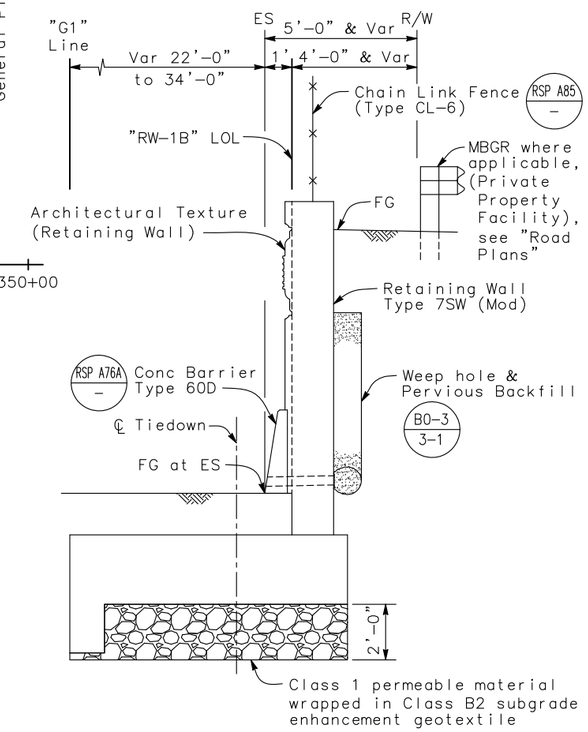

TYPICAL SECTION

"RW-1B" 347+88.00 to 350+44.00
No Scale

DESIGN OVERSIGHT	DESIGN	BY A. WANG	CHECKED P. SHINN	LOAD & RESISTANCE FACTOR DESIGN	LIVE LOADING: 240 psf SURCHARGE		
	DETAILS	BY W. Y. TAN	CHECKED P. SHINN	LAYOUT	BY A. WANG	CHECKED K. HARIRSAZ	
SIGN OFF DATE	QUANTITIES	BY W. Y. TAN	CHECKED B. NEDUNGADI	SPECIFICATIONS	BY K. HARIRSAZ	PLANS AND SPECS COMPARED K. HARIRSAZ	

DESIGN GENERAL PLAN SHEET (ENGLISH) (REV. 06-01-09)

ORIGINAL SCALE IN INCHES FOR REDUCED PLANS 0 1 2 3

PREPARED FOR THE STATE OF CALIFORNIA DEPARTMENT OF TRANSPORTATION

K. HARIRSAZ
PROJECT ENGINEER

CU 05
EA 474501

FILE => $REQUEST

BRIDGE NO. 49E0016
POST MILES 6.45

RETAINING WALL No. 1B
GENERAL PLAN No. 2

DISREGARD PRINTS BEARING EARLIER REVISION DATES

REVISION DATES (PRELIMINARY STAGE ONLY): 3/12/10 3/24/10 4/30/10 7/16/10

SHEET 2 OF 10

USERNAME => $USER DATE PLOTTED => $DATE TIME PLOTTED => $TIME

DIST	COUNTY	ROUTE	POST MILES TOTAL PROJECT	SHEET No	TOTAL SHEETS
05	SLO	101	5.9/6.9	242	290

REGISTERED CIVIL ENGINEER — DATE 4/30/10

PLANS APPROVAL DATE

REGISTERED PROFESSIONAL ENGINEER ALLEN WANG No. C 66503 Exp. 06/30/12 Civil STATE OF CALIFORNIA

The State of California or its officers or agents shall not be responsible for the accuracy or completeness of scanned copies of this plan sheet.

COUNTY OF SAN LUIS OBISPO
PUBLIC WORKS AND TRANSPORTATION DEPARTMENT
1050 MONTEREY STREET
SAN LUIS OBISPO, CA 93408

RAJAPPAN & MEYER
CONSULTING ENGINEERS, INC.
1038 LEIGH AVE, SUITE 100
SAN JOSE, CA 95126

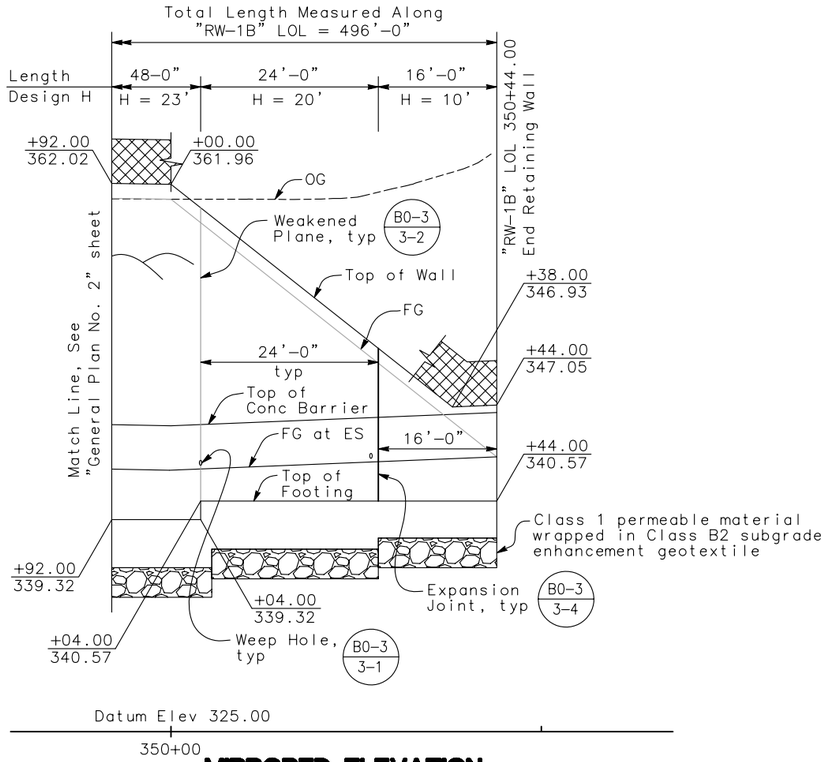

MIRRORED ELEVATION

Scale: Horiz 1" = 10'
Verti 1" = 5'

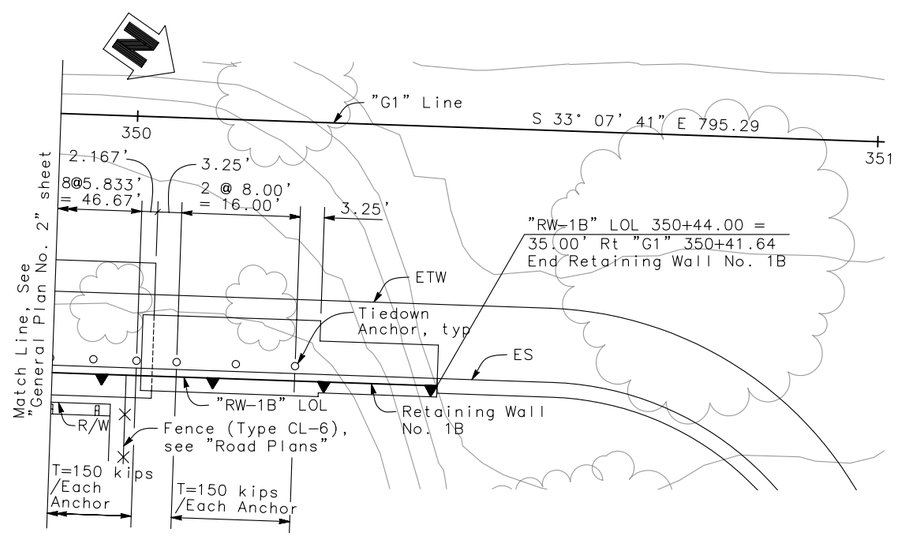

PLAN

Scale: 1" = 10'

Note:
The Contractor shall verify all controlling field dimensions before ordering or fabricating any material

Note:
Tiedown anchor spacing measured along "RW-1B" line.

INDEX TO PLANS

SHEET NO.	TITLE
1	General Plan No. 1
2	General Plan No. 2
3	General Plan No. 3
4	Retaining Wall Type 7SW (Mod) Detail No. 1
5	Retaining Wall Type 7SW (Mod) Detail No. 2
6	Tiedown Anchor Detail No. 1
7	Tiedown Anchor Detail No. 2
8	Log of Test Borings 1 of 3
9	Log of Test Borings 2 of 3
10	Log of Test Borings 3 of 3

STANDARD PLANS DATED MAY, 2006

A10A	Acronyms and Abbreviations (A – L)
A10B	Acronyms and Abbreviations (M – Z)
A10C	Symbols (Sheet 1 of 2)
A10D	Symbols (Sheet 2 of 2)
A62B	Limits of Payment for Excavation and Backfill – Bridge Surcharge and Wall
RSP A76A	Concrete Barrier Type 60D
RSP A85	Chain Link Fence
B0-3	Bridge Details
B3-8	Retaining Wall Details No. 1

Standard Plan sheets No.
Detail No.

QUANTITIES

Structure Excavation (Type D)	935	CY
Structure Excavation (Retaining Wall)	4,539	CY
Structure Backfill (Retaining Wall)	1,546	CY
Permeable Material with Subgrade Enhancement Geotextile	287	CY
Tiedown Anchor	49	EA
Structural Concrete, Retaining Wall	1,300	CY
Architectural Texture (Retaining Wall)	648	SF
Anti-Graffiti Coating	6,202	SF
Bar Reinforcing Steel	136,054	LB
Chain Link Fence (Type CL-6)	499	LF
Concrete Barrier (Type 60D)	498	LF

DESIGN OVERSIGHT	DESIGN	BY A. WANG	CHECKED P. SHINN	LOAD & RESISTANCE FACTOR DESIGN	LIVE LOADING: 240 psf SURCHARGE		
	DETAILS	BY W. Y. TAN	CHECKED P. SHINN	LAYOUT	BY A. WANG	CHECKED K. HARIRSAZ	
SIGN OFF DATE	QUANTITIES	BY W. Y. TAN	CHECKED B. NEDUNGADI	SPECIFICATIONS	BY K. HARIRSAZ	PLANS AND SPECS COMPARED K. HARIRSAZ	

DESIGN GENERAL PLAN SHEET (ENGLISH) (REV. 06-01-09)

ORIGINAL SCALE IN INCHES FOR REDUCED PLANS 0 1 2 3

PREPARED FOR THE STATE OF CALIFORNIA DEPARTMENT OF TRANSPORTATION

K. HARIRSAZ
PROJECT ENGINEER

CU 05
EA 474501

FILE => $REQUEST

BRIDGE NO. 49E0016
POST MILES 6.45

RETAINING WALL No. 1B

GENERAL PLAN No. 3

DISREGARD PRINTS BEARING EARLIER REVISION DATES → 5/12/10 5/24/10 4/30/10

REVISION DATES (PRELIMINARY STAGE ONLY) — SHEET 3 OF 10

USERNAME => $USER DATE PLOTTED => $DATE TIME PLOTTED => $TIME

DIST	COUNTY	ROUTE	POST MILES TOTAL PROJECT	SHEET No.	TOTAL SHEETS
05	SLO	101	5.9/6.9	243	290

REGISTERED CIVIL ENGINEER 4/30/10

PLANS APPROVAL DATE

REGISTERED PROFESSIONAL ENGINEER ALLEN WANG No. C 66503 Exp. 06/30/12 CIVIL STATE OF CALIFORNIA

The State of California or its officers or agents shall not be responsible for the accuracy or completeness of electronic copies of this plan sheet.

COUNTY OF SAN LUIS OBISPO
PUBLIC WORKS AND TRANSPORTATION DEPARTMENT
1050 MONTEREY STREET
SAN LUIS OBISPO, CA 93408

RAJAPPAN & MEYER
CONSULTING ENGINEERS, INC.
1038 LEIGH AVE, SUITE 100
SAN JOSE, CA 95126

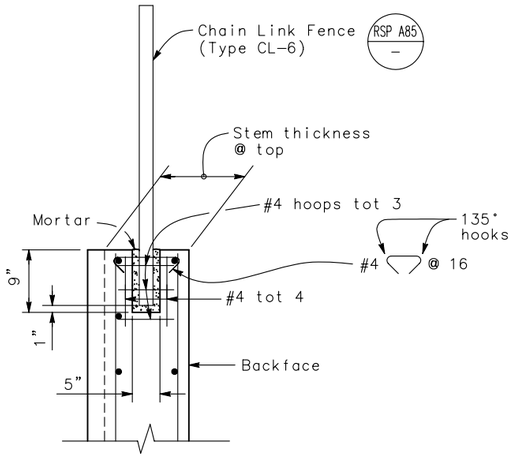

DETAIL A ◇2

No Scale

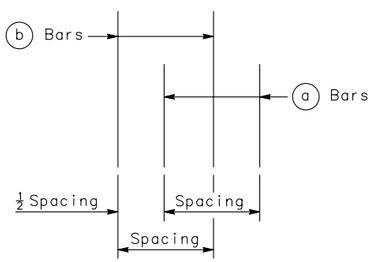

REBAR SPACING

No Scale

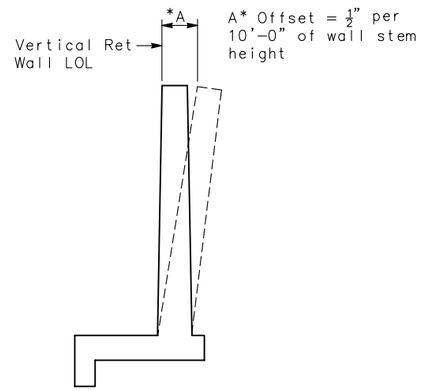

WALL OFFSET ◇2

No Scale

Values for offsetting forms to be determined by engineer

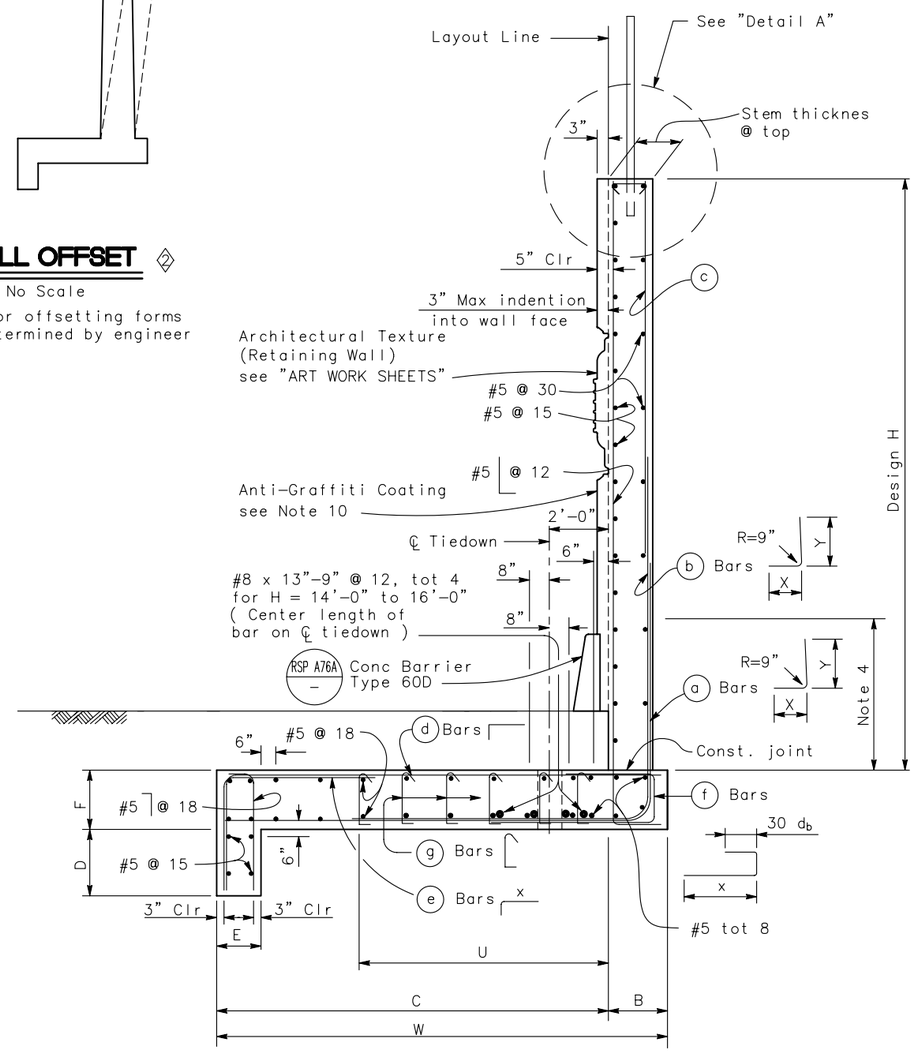

SPREAD FOOTING SECTION ◇2

No Scale

DESIGN DATA ◇4

DESIGN: Load Factor Design (LFD)

CONCRETE: Reinforced Concrete, f'c = 3600 psi
fy = 60,000 psi

LOADING CASE:

Level ground with 240 psf live load surcharge
Seismic Load = 0.3 Dead Load
Dead Load of Fence = 10 lb/ft

SEISMIC LOAD: SOIL

Kh = 0.3g
Kv = 0.0
Kae : Mononobe-Okabe Method

SOIL: Design Groundwater at Elev 341 ft
$\phi = 34°$ $\gamma = 120$ pcf $\gamma' = 58$ pcf
Equivalent fluid pressure:
STATIC ACTIVE = 36 pcf for determination of toe pressure
STATIC PASSIVE = 350 pcf (above Elev 341 ft)
= 200 pcf (below Elev 341 ft)
SEISMIC = Coulomb's Theory

LOAD COMBINATIONS:

EXTERNAL STABILITY:

Group 1 : D + E + SC + 0.75T (F.S. Sliding > 1.5)
Group 3 : D + PYM + P_{av} + V + 1.0 T (F.S. Sliding > 1.0)

INTERNAL STABILITY: (LFD)

Group A : βD + 1.7 E + 1.7 SC + 0.75 T
Group C :(Stem) 1.0 D + 1.0 E + 1.0 EQD + 1.0 EQE
Group C :(Footing) D + PYM + P_{av} + V + 1.0 T

Where : β = 1.0 or 1.3 whichever controls design
D = Dead Load
E = Lateral Earth Pressure
P_{av} = Vertical Earth Pressure
SC = Live Load Surcharge
EQD = Seismic Dead Load
EQE = Seismic Lateral Earth Pressure
PYM = Probable Yield Moment (1.3 x Nominal Yield Moment of Stem)
V = Possible Shear at Base of Stem associated with Probable Yield Moment
T = Design Force for Vertical Tiedown

GENERAL NOTES ◇3

1. For retaining wall architectural finish or texture, see details elsewhere in project plans.
2. For details not shown and drainage notes, see B3-8
3. Footing coverage, 2'-0" minimum.
4. Limit of no splicing rebars = H/3.
5. Increasing stem thickness not permitted.
6. Place footing key concrete against undisturbed material.
7. Shift (a) bars, (b) bars, and (c) bars as required to clear formed hole for tiedown.
8. No reinforcements in footing key for H= 8' to H=12'.
9. Maximum distance from ℄ tiedown to edge of footing = 0.4(S).
10. Apply Anti-Graffiti Coating to the exposed front surface of wall stem and Conc Barrier Type 60D
11. Structure excavation under the design groundwater level at Elev 341 ft is paid for as Structure Excavation (Type D)

Note:
The Contractor shall verify all controlling field dimensions before ordering or fabricating any material

◇1

STANDARD DRAWING			
FILE NO. xs14-380-1e	APPROVED BY G. WANG (RESPONSIBLE TECHNICAL SPECIALIST)	RELEASED BY ROBERTO LACALLE (RESPONSIBLE OFFICE CHIEF)	
	APPROVAL DATE 5-13-08	RELEASE DATE 5-13-08	

◇1 Modified Sheet Title
◇2 Modified Details
◇3 Revised Notes
◇4 Modified Design Data

STATE OF CALIFORNIA
DEPARTMENT OF TRANSPORTATION

DIVISION OF ENGINEERING SERVICES

BRIDGE NO. 49E0016
MILE POST 6.45

RETAINING WALL No. 1B

RETAINING WALL TYPE 7SW (MOD) DETAIL No. 1

DS OSD 2147A (ENGLISH STANDARD DRAWING "XS" BORDER REV. 01/11/08)

ORIGINAL SCALE IN INCHES FOR REDUCED PLANS 0 1 2 3

CU 05
EA 474501

DISREGARD PRINTS BEARING EARLIER REVISION DATES → 3/12/10 3/24/10 4/30/10

REVISION DATES (PRELIMINARY STAGE ONLY) | SHEET 4 | OF 10

USERNAME => $USER

$REQUEST

DATE PLOTTED => $DATE TIME PLOTTED => $TIME

DIST	COUNTY	ROUTE	POST MILES TOTAL PROJECT	SHEET No.	TOTAL SHEETS
05	SLO	101	5.9/6.9	244	290

Allen Wang 4/30/10
REGISTERED CIVIL ENGINEER

PLANS APPROVAL DATE

REGISTERED PROFESSIONAL ENGINEER ALLEN WANG No. C 66503 Exp. 06/30/12 CIVIL STATE OF CALIFORNIA

The State of California or its officers or agents shall not be responsible for the accuracy or completeness of electronic copies of this plan sheet.

COUNTY OF SAN LUIS OBISPO
PUBLIC WORKS AND TRANSPORTATION DEPARTMENT
1050 MONTEREY STREET
SAN LUIS OBISPO, CA 93408

RAJAPPAN & MEYER
CONSULTING ENGINEERS, INC.
1038 LEIGH AVE, SUITE 100
SAN JOSE, CA 95126

TABLE 1: TABLE OF DIMENSIONS AND DATA ◇2

Design H	8'-0"	10'-0"	12'-0"	14'-0"	16'-0"	20'-0"	22'-0"	23'-0"
W	7'-6"	8'-9"	10'-0"	10'-6"	12'-3"	15'-3"	18'-3"	18'-3"
C	6'-0"	7'-3"	8'-0"	8'-6"	10'-3"	13'-0"	15'-3"	15'-3"
B	1'-6"	1'-6"	2'-0"	2'-0"	2'-0"	2'-3"	3'-0"	3'-0"
F	2'-6"	2'-6"	2'-6"	2'-3"	2'-6"	3'-3"	3'-3"	3'-3"
D (Footing Key Depth)	1'-6"	1'-6"	1'-9"	1'-9"	2'-0"	2'-6"	2'-9"	2'-9"
E	1'-3"	1'-3"	1'-3"	1'-3"	1'-6"	1'-9"	1'-9"	1'-9"
Stem Thickness	1'-0"	1'-0"	1'-3"	1'-3"	1'-6"	1'-9"	2'-0"	2'-0"
ⓐ Bars					#6@8	#9@12	#8@8	#8@7
X					Cont	Cont	Cont	Cont
Y					6'-0"	8'-6"	9'-0"	9'-6"
ⓑ Bars	#6@12	#7@12	#7@10	#8@10	#6@8	#9@12	#8@8	#8@7
X	Cont	Cont	Cont	Cont	5'-9"	6'-9"	7'-0"	7'-9"
Y	Cont	Cont	Cont	Cont	Cont	12'-6"	13'-6"	14'-0"
Placement, ○					Ⓐ	Ⓐ	Ⓐ	Ⓐ
ⓒ Bars						#8@12	#7@8	#7@7
Placement, ○						Ⓒ	Ⓒ	Ⓒ
ⓓ Bars	#5@18	#5@18	#5@18	#5@18	#5@18	#5@18	#5@18	#5@18
ⓔ Bars						#5@18	#5@18	#5@18
X						6'-0"	6'-0"	6'-0"
Placement, ○						Ⓓ	Ⓓ	Ⓓ
ⓕ Bars				#6@12	#6@8	#6@10	#6@8	#7@6
X				3'-9"	3'-9"	4'-3"	4'-3"	4'-6"
ⓖ Bars				#4@15	#4@15	#4@15	#4@12	#5@15
U				5'-0"	6'-0"	7'-6"	8'-9"	8'-9"
Tie Down Design Force (T) k/ft	0	0	0	4	6	18	25	25
Tie Down Maximum Spacing (S) ft				24	16	8	6	6
Ultimate Bearing Capacity Required (ksf)	5.70	4.29	5.72	4.47	5.59	4.73	4.34	5.04
H_D (N) Group 1 k/ft	2.66 (6.23)	3.59 (7.42)	4.67 (9.34)	5.72 (12.81)	7.23 (16.57)	10.98 (31.17)	13.13 (41.28)	14.28 (43.53)

LEGEND FOR BAR PLACEMENT: ◇3

Ⓐ : Alternate placement of ⓐ bars and ⓑ bars

Ⓒ : Splice ⓒ bars to ⓑ bars

Ⓓ : Bundle ⓓ bars and ⓔ bars

H_D : Horizontal driving force

(N) : Sum of vertical forces

Cont : Continuous

Note:
The Contractor shall verify all controlling field dimensions before ordering or fabricating any material

◇1

STANDARD DRAWING

FILE NO. xs14-380-2e

APPROVED BY G WANG (RESPONSIBLE TECHNICAL SPECIALIST)
APPROVAL DATE 5-13-08

RELEASED BY ROBERTO LACALLE (RESPONSIBLE OFFICE CHIEF)
RELEASE DATE 5-13-08

◇1 Modified Sheet Title
◇2 Modified Table 1
◇3 Deleted Bar Placement Ⓑ

STATE OF CALIFORNIA
DEPARTMENT OF TRANSPORTATION

DIVISION OF ENGINEERING SERVICES

BRIDGE NO. 49E0016
MILE POST 6.45

RETAINING WALL No. 1B
RETAINING WALL TYPE 7SW (MOD) DETAIL No. 2

DS OSD 2147A (ENGLISH STANDARD DRAWING "XS" BORDER REV. 01/11/08)

ORIGINAL SCALE IN INCHES FOR REDUCED PLANS 0 1 2 3

CU 05
EA 474501

DISREGARD PRINTS BEARING EARLIER REVISION DATES 3/12/10 3/24/10 4/30/10

REVISION DATES (PRELIMINARY STAGE ONLY)

SHEET 5 OF 10

USERNAME => $USER

$REQUEST

DATE PLOTTED => $DATE TIME PLOTTED => $TIME

DIST	COUNTY	ROUTE	POST MILES TOTAL PROJECT	SHEET No.	TOTAL SHEETS
05	SLO	101	5.9/6.9	245	290

Allen Wang 4/30/10
REGISTERED CIVIL ENGINEER

PLANS APPROVAL DATE

REGISTERED PROFESSIONAL ENGINEER ALLEN WANG No. C 66503 Exp. 06/30/12 CIVIL STATE OF CALIFORNIA

The State of California or its officers or agents shall not be responsible for the accuracy or completeness of electronic copies of this plan sheet.

COUNTY OF SAN LUIS OBISPO
PUBLIC WORKS AND TRANSPORTATION DEPARTMENT
1050 MONTEREY STREET
SAN LUIS OBISPO, CA 93408

RAJAPPAN & MEYER
CONSULTING ENGINEERS, INC.
1038 LEIGH AVE, SUITE 100
SAN JOSE, CA 95126

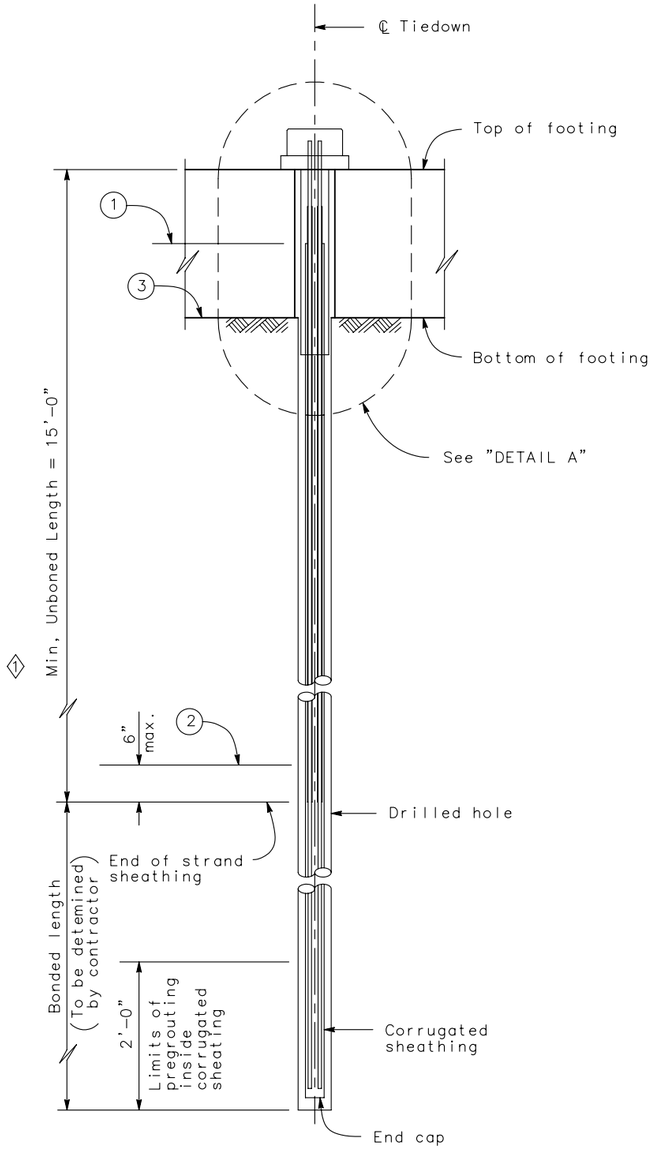

TIEDOWN TENDON DETAILS (STRANDS)
Scale 1"=1'

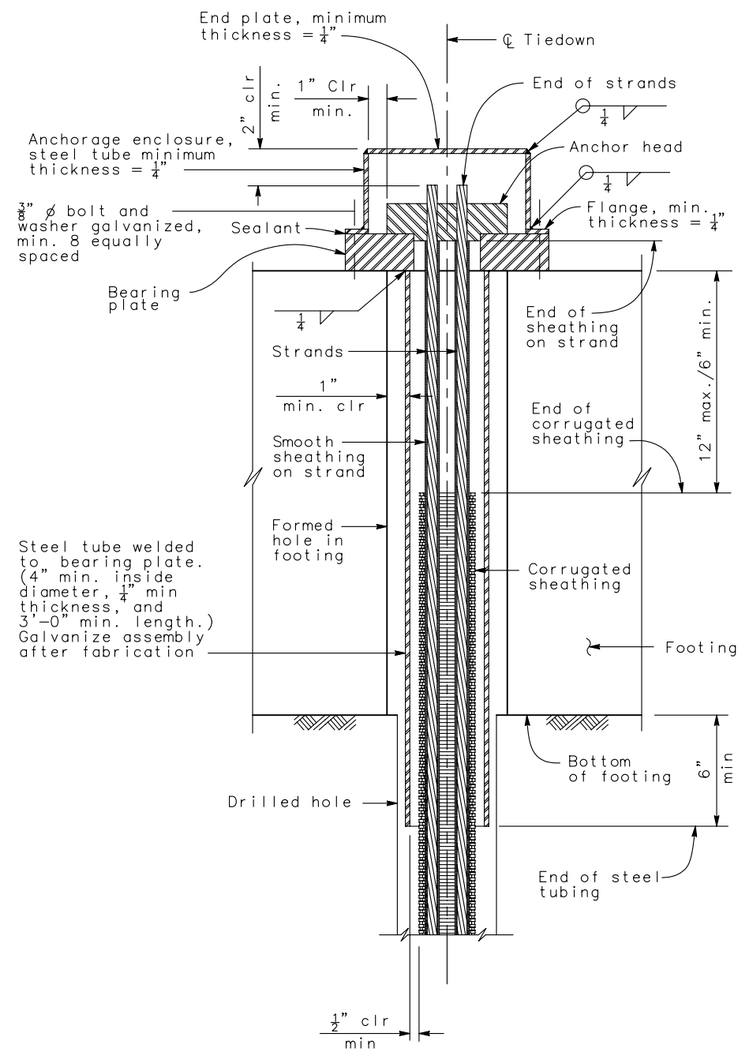

DETAIL A
Scale 3"= 1'

GENERAL NOTES-TIEDOWN ANCHOR

PRESTRESSING (TIEDOWNS):
BARS– ASTM Designation: A722 Type II
STRANDS–ASTM Designation: A416
T= DESIGN FORCE PER TIEDOWN (K)
fpu= MINIMUM TENSILE STRENGTH OF PRESTRESSING STEEL (PSI)

As= MINIMUM CROSS SECTIONAL AREA OF PRESTRESSING STEEL IN TIEDOWN TENDON (square inches)

$$As\ (min) = \frac{1.5T}{0.75\ fpu}$$

NOTES:

1. Anchorage enclosure shall have provisions to allow injecting grout at low end and venting at high end. Galvanize enclosure after fabrication.
2. Alternative anchor enclosure shown on sheet "TIEDOWN ANCHOR DETAILS No.2" sheet

(1) Level of initial grouting inside corrugated sheathing

(2) Level of initial grouting in drilled hole.

(3) Level of secondary grouting in drilled hole.

Note:
The Contractor shall verify all controlling field dimensions before ordering or fabricating any material

STANDARD DRAWING
FILE NO. xs12-030-1e
APPROVED BY G. WANG — RESPONSIBLE TECHNICAL SPECIALIST
APPROVAL DATE 5-13-08
RELEASED BY ROBERTO LACALLE — RESPONSIBLE OFFICE CHIEF
RELEASE DATE 5-13-08

(1) Modified Text

STATE OF CALIFORNIA
DEPARTMENT OF TRANSPORTATION

DIVISION OF ENGINEERING SERVICES

BRIDGE NO. 49E0016
MILE POST 6.45

RETAINING WALL No. 1B
TIEDOWN ANCHOR DETAIL No. 1

DS OSD 2147A (ENGLISH STANDARD DRAWING "XS" BORDER REV. 01/11/08)

ORIGINAL SCALE IN INCHES FOR REDUCED PLANS 0 1 2 3

CU 05
EA 474501

DISREGARD PRINTS BEARING EARLIER REVISION DATES → 3/12/10 3/24/10 4/30/10

REVISION DATES (PRELIMINARY STAGE ONLY) | SHEET 6 | OF 10

USERNAME => $USER

$REQUEST

TIME PLOTTED => $TIME

DATE PLOTTED => $DATE

DIST	COUNTY	ROUTE	POST MILES TOTAL PROJECT	SHEET No.	TOTAL SHEETS
05	SLO	101	5.9/6.9	246	290

Allen Wang 4/30/10
REGISTERED CIVIL ENGINEER

PLANS APPROVAL DATE

REGISTERED PROFESSIONAL ENGINEER ALLEN WANG No. C 66503 Exp. 06/30/12 CIVIL STATE OF CALIFORNIA

The State of California or its officers or agents shall not be responsible for the accuracy or completeness of electronic copies of this plan sheet.

COUNTY OF SAN LUIS OBISPO
PUBLIC WORKS AND TRANSPORTATION DEPARTMENT
1050 MONTEREY STREET
SAN LUIS OBISPO, CA 93408

RAJAPPAN & MEYER
CONSULTING ENGINEERS, INC.
1038 LEIGH AVE, SUITE 100
SAN JOSE, CA 95126

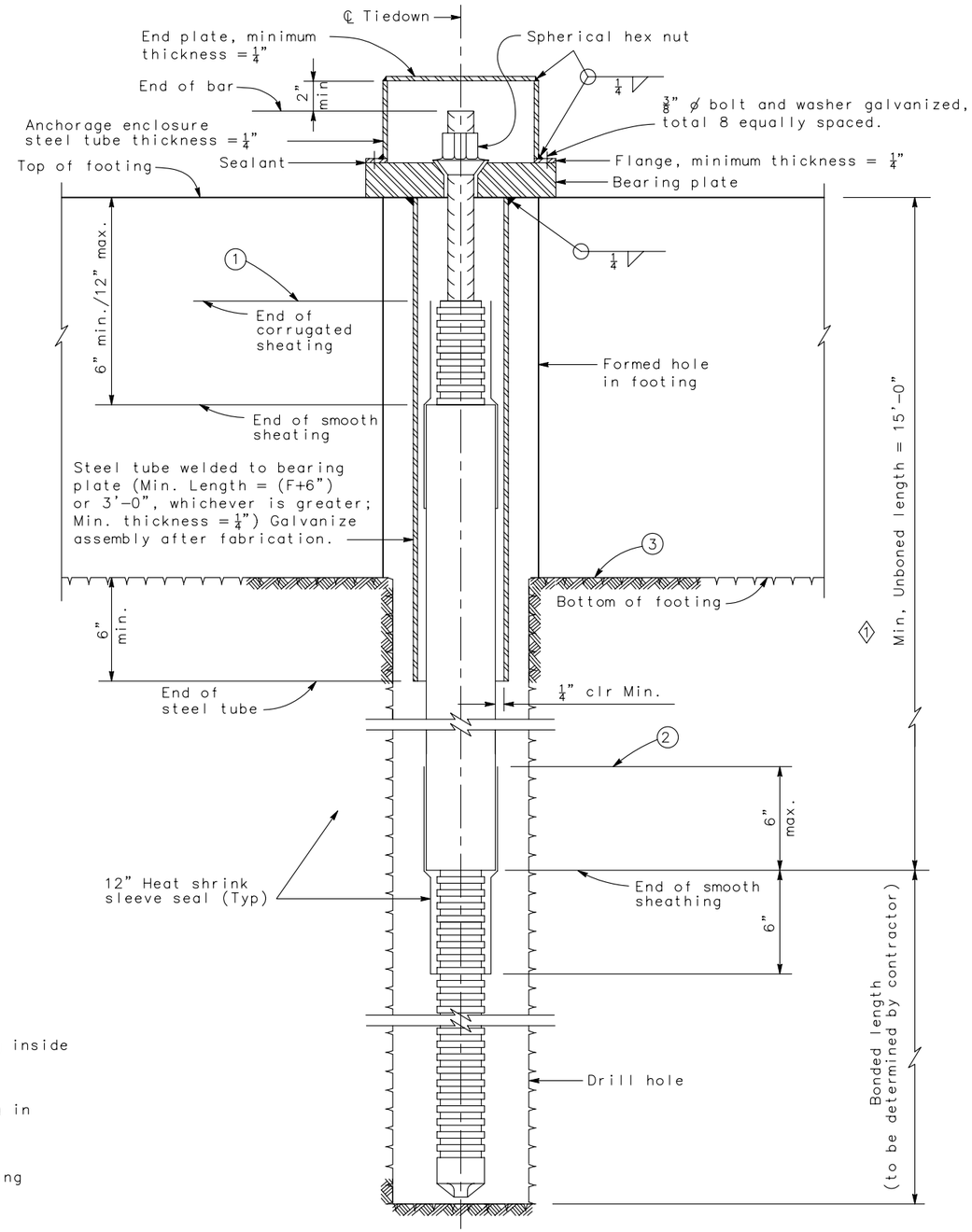

TIEDOWN TENDON DETAILS (BAR)

Scale 3"= 1'

NOTE:

Anchorage enclosure shall have provision to allow injecting grout at low end and venting at high end. Galvanize enclosure after fabrication.

1. Level of initial grouting inside corrugated sheathing.
2. Level of initial grouting in drilled hole.
3. Level of secondary grouting in drilled hole.

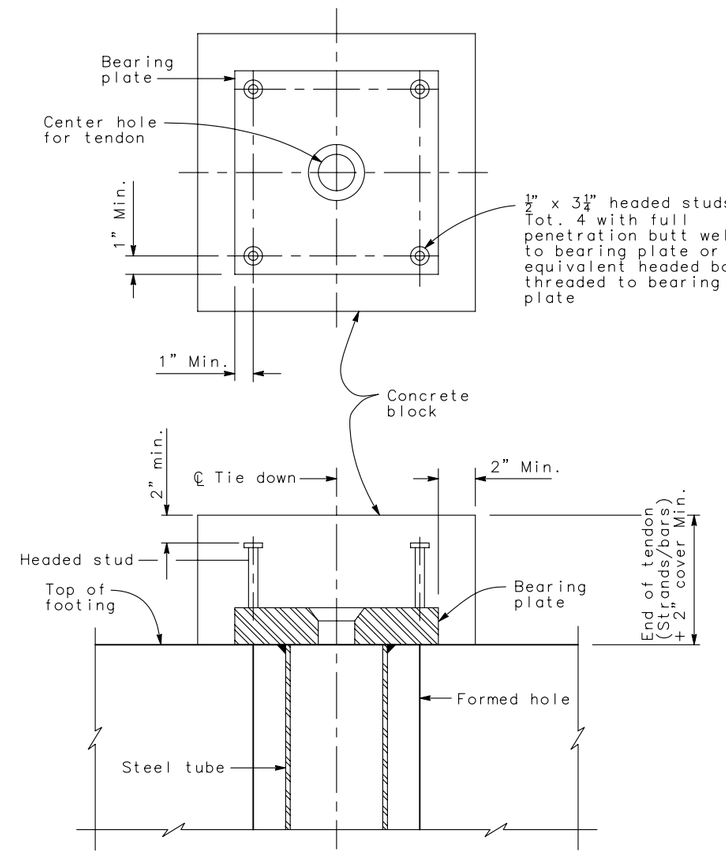

ANCHOR ENCLOSURE (ALTERNATIVE)

Scale 3"= 1'

Note:
The Contractor shall verify all controlling field dimensions before ordering or fabricating any material

STANDARD DRAWING

FILE NO. xs12-030-2e

APPROVED BY G. WANG (RESPONSIBLE TECHNICAL SPECIALIST) — APPROVAL DATE 5-13-08

RELEASED BY ROBERTO LACALLE (RESPONSIBLE OFFICE CHIEF) — RELEASE DATE 5-13-08

1 Modified Text

STATE OF CALIFORNIA DEPARTMENT OF TRANSPORTATION

DIVISION OF ENGINEERING SERVICES

BRIDGE NO. 49E0016

MILE POST 6.45

RETAINING WALL No. 1B

TIEDOWN ANCHOR DETAIL No. 2

DS OSD 2147A (ENGLISH STANDARD DRAWING "XS" BORDER REV. 01/11/08)

ORIGINAL SCALE IN INCHES FOR REDUCED PLANS 0 1 2 3

CU 05
EA 474501

DISREGARD PRINTS BEARING EARLIER REVISION DATES

REVISION DATES (PRELIMINARY STAGE ONLY) 3/12/10 3/24/10 4/30/10

SHEET 7 OF 10

USERNAME => $USER

$REQUEST

TIME PLOTTED => $TIME

DATE PLOTTED => $DATE

DIST	COUNTY	ROUTE	POST MILES TOTAL PROJECT	SHEET No	TOTAL SHEETS
05	SLO	101	5.9/6.9	247	290

REGISTERED GEOTECHNICAL ENGINEER — DATE 4/30/10

PLANS APPROVAL DATE

REGISTERED PROFESSIONAL ENGINEER — GARY PARIKH — No. G.E. 666 — Exp. 12/31/11 — GEOTECHNICAL — STATE OF CALIFORNIA

The State of California or its officers or agents shall not be responsible for the accuracy or completeness of electronic copies of this plan sheet.

PARIKH CONSULTANTS, INC.
2360 QUME DRIVE, SUITE A
SAN JOSE, CA 95131

REFERENCE: CALTRANS SOIL & ROCK LOGGING, CLASSIFICATION, AND PRESENTATION MANUAL (JUNE 2007)

GROUP SYMBOLS AND NAMES

Graphic/Symbol	Group Names	Graphic/Symbol	Group Names
GW	Well-graded GRAVEL Well-graded GRAVEL with SAND	CL	Lean CLAY Lean CLAY with SAND Lean CLAY with GRAVEL SANDY lean CLAY SANDY lean CLAY with GRAVEL GRAVELLY lean CLAY GRAVELLY lean CLAY with SAND
GP	Poorly graded GRAVEL Poorly graded GRAVEL with SAND		
GW-GM	Well-graded GRAVEL with SILT Well-graded GRAVEL with SILT and SAND	CL-ML	SILTY CLAY SILTY CLAY with SAND SILTY CLAY with GRAVEL SANDY SILTY CLAY SANDY SILTY CLAY with GRAVEL GRAVELLY SILTY CLAY GRAVELLY SILTY CLAY with SAND
GW-GC	Well-graded GRAVEL with CLAY (or SILTY CLAY) Well-graded GRAVEL with CLAY and SAND (or SILTY CLAY and SAND)		
GP-GM	Poorly graded GRAVEL with SILT Poorly graded GRAVEL with SILT and SAND	ML	SILT SILT with SAND SILT with GRAVEL SANDY SILT SANDY SILT with GRAVEL GRAVELLY SILT GRAVELLY SILT with SAND
GP-GC	Poorly graded GRAVEL with CLAY (or SILTY CLAY) Poorly graded GRAVEL with CLAY and SAND (or SILTY CLAY and SAND)		
GM	SILTY GRAVEL SILTY GRAVEL with SAND	OL	ORGANIC lean CLAY ORGANIC lean CLAY with SAND ORGANIC lean CLAY with GRAVEL SANDY ORGANIC lean CLAY SANDY ORGANIC lean CLAY with GRAVEL GRAVELLY ORGANIC lean CLAY GRAVELLY ORGANIC lean CLAY with SAND
GC	CLAYEY GRAVEL CLAYEY GRAVEL with SAND		
GC-GM	SILTY, CLAYEY GRAVEL SILTY, CLAYEY GRAVEL with SAND	OL	ORGANIC SILT ORGANIC SILT with SAND ORGANIC SILT with GRAVEL SANDY ORGANIC SILT SANDY ORGANIC SILT with GRAVEL GRAVELLY ORGANIC SILT GRAVELLY ORGANIC SILT with SAND
SW	Well-graded SAND Well-graded SAND with GRAVEL		
SP	Poorly graded SAND Poorly graded SAND with GRAVEL	CH	Fat CLAY Fat CLAY with SAND Fat CLAY with GRAVEL SANDY fat CLAY SANDY fat CLAY with GRAVEL GRAVELLY fat CLAY GRAVELLY fat CLAY with SAND
SW-SM	Well-graded SAND with SILT Well-graded SAND with SILT and GRAVEL		
SW-SC	Well-graded SAND with CLAY (or SILTY CLAY) Well-graded SAND with CLAY and GRAVEL (or SILTY CLAY and GRAVEL)	MH	Elastic SILT Elastic SILT with SAND Elastic SILT with GRAVEL SANDY elastic SILT SANDY elastic SILT with GRAVEL GRAVELLY elastic SILT GRAVELLY elastic SILT with SAND
SP-SM	Poorly graded SAND with SILT Poorly graded SAND with SILT and GRAVEL		
SP-SC	Poorly graded SAND with CLAY (or SILTY CLAY) Poorly graded SAND with CLAY and GRAVEL (or SILTY CLAY and GRAVEL)	OH	ORGANIC fat CLAY ORGANIC fat CLAY with SAND ORGANIC fat CLAY with GRAVEL SANDY ORGANIC fat CLAY SANDY ORGANIC fat CLAY with GRAVEL GRAVELLY ORGANIC fat CLAY GRAVELLY ORGANIC fat CLAY with SAND
SM	SILTY SAND SILTY SAND with GRAVEL		
SC	CLAYEY SAND CLAYEY SAND with GRAVEL	OH	ORGANIC elastic SILT ORGANIC elastic SILT with SAND ORGANIC elastic SILT with GRAVEL SANDY ORGANIC elastic SILT SANDY ORGANIC elastic SILT with GRAVEL GRAVELLY ORGANIC elastic SILT GRAVELLY ORGANIC elastic SILT with SAND
SC-SM	SILTY, CLAYEY SAND SILTY, CLAYEY SAND with GRAVEL		
PT	PEAT	OL/OH	ORGANIC SOIL ORGANIC SOIL with SAND ORGANIC SOIL with GRAVEL SANDY ORGANIC SOIL SANDY ORGANIC SOIL with GRAVEL GRAVELLY ORGANIC SOIL GRAVELLY ORGANIC SOIL with SAND
	COBBLES COBBLES and BOULDERS BOULDERS		

FIELD AND LABORATORY TESTING

- (C) Consolidation (ASTM D 2435)
- (CL) Collapse Potential (ASTM D 5333)
- (CP) Compaction Curve (CTM 216)
- (CR) Corrosivity Testing (CTM 643, CTM 422, CTM 417)
- (CU) Consolidated Undrained Trioxial (ASTM D 4767)
- (DS) Direct Shear (ASTM D 3080)
- (EI) Expansion Index (ASTM D 4829)
- (M) Moisture Content (ASTM D 2216)
- (OC) Organic Content-% (ASTM D 2974)
- (P) Permeability (CTM 220)
- (PA) Particle Size Analysis (ASTM D 422)
- (PI) Plasticity Index (AASHTO T 90) Liquid Limit (AASHTO T 89)
- (PL) Point Load Index (ASTM D 5731)
- (PM) Pressure Meter
- (PP) Pocket Penetrometer
- (R) R-Value (CTM 301)
- (SE) Sand Equivalent (CTM 217)
- (SG) Specific Gravity (AASHTO T 100)
- (SL) Shrinkage Limit (ASTM D 427)
- (SW) Swell Potential (ASTM D 4546)
- (TV) Pocket Torvane
- (UC) Unconfined Compression-Soil (ASTM D 2166) / Unconfined Compression-Rock (ASTM D 2938)
- (UU) Unconsolidated Undrained Trioxial (ASTM D 2850)
- (UW) Unit Weight (ASTM D 4767)
- (VS) Vane Shear (AASHTO T 223)

APPARENT DENSITY OF COHESIONLESS SOILS

Description	SPT N_{60} (Blows / 12 inches)
Very loose	0 - 4
Loose	5 - 10
Medium Dense	11 - 30
Dense	31 - 50
Very Dense	> 50

MOISTURE

Description	Criteria
Dry	Absence of moisture, dusty, dry to the touch
Moist	Damp but no visible water
Wet	Visible free water, usually soil is below water table

PERCENT OR PROPORTION OF SOILS

Description	Criteria
Trace	Particles are present but estimated to be less than 5%
Few	5 to 10%
Little	15 to 25%
Some	30 to 45%
Mostly	50 to 100%

PARTICLE SIZE

Description		Size
Boulder		> 12"
Cobble		3" to 12"
Gravel	Coarse	3/4" to 3"
	Fine	No. 4 to 3/4"
Sand	Coarse	No. 10 to No. 4
	Medium	No. 40 to No. 10
	Fine	No. 200 to No. 40

CEMENTATION

Description	Criteria
Weak	Crumbles or breaks with handling or little finger pressure.
Moderate	Crumbles or breaks with considerable finger pressure.
Strong	Will not crumble or break with finger pressure.

CONSISTENCY OF COHESIVE SOILS

Description	Unconfined Compressive Strength (tsf)	Pocket Penetrometer Measurement (tsf)	Torvane Measurement (tsf)	Field Approximation
Very Soft	< 0.25	< 0.25	< 0.12	Easily penetrated several inches by fist
Soft	0.25 to 0.50	0.25 to 0.50	0.12 to 0.25	Easily penetrated several inches by thumb
Medium Stiff	0.50 to 1.0	0.50 to 1.0	0.25 to 0.50	Penetrated several inches by thumb with moderate effort
Stiff	1 to 2	1 to 2	0.50 to 1.0	Readily indented by thumb but penetrated only with great effort
Very Stiff	2 to 4	2 to 4	1.0 to 2.0	Readily indented by thumbnail
Hard	> 4.0	> 4.0	> 2.0	Indented by thumbnail with difficulty

PLASTICITY OF FINE-GRAINED SOILS

Description	Criteria
Nonplastic	A 1/8-inch thread cannot be rolled at any water content.
Low	The thread can barely be rolled and the lump cannot be formed when drier than the plastic limit.
Medium	The thread is easy to roll and not much time is required to reach the plastic limit. The thread cannot be rerolled after reaching the plastic limit. The lump crumbles when drier than the plastic limit.
High	It takes considerable time rolling and kneading to reach the plastic limit. The thread can be rerolled several times after reaching the plastic limit. The lump can be formed without crumbling when drier than the plastic limit.

BOREHOLE IDENTIFICATION

Symbol	Hole Type	Description
Size	A	Auger Boring
Size	R P	Rotary drilled boring Rotary percussion boring (air)
Size	R	Rotary drilled diamond core
Size	HD HA	Hand driven (1-inch soil tube) Hand Auger
●	D	Dynamic Cone Penetration Boring
▲	CPT	Cone Penetration Test (ASTM D 5778-95)
□	O	Other

Hole I.D. — Note: Size in inches.

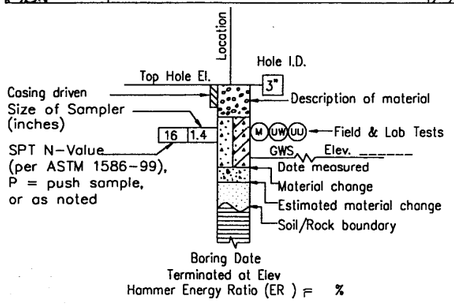

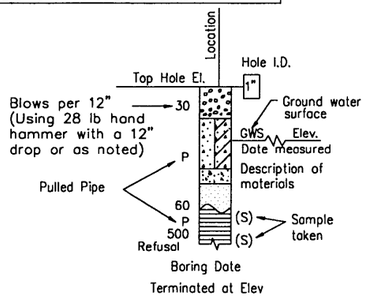

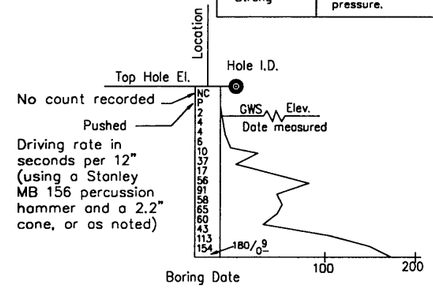

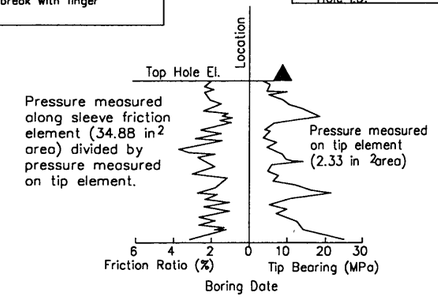

DESIGN OVERSIGHT	DRAWN BY	L. TRAN	L. BHANGOO FIELD INVESTIGATION BY:	PREPARED FOR THE STATE OF CALIFORNIA DEPARTMENT OF TRANSPORTATION	D. WANG PROJECT ENGINEER
SIGN OFF DATE	CHECKED BY	D. WANG	DATE: JANUARY AND NOVEMBER 2007		

BRIDGE NO. 49E0016 — POST MILES 6.45

SOIL LEGEND
LOG OF TEST BORINGS 1 OF 3

CU 05
EA 474501

DISREGARD PRINTS BEARING EARLIER REVISION DATES — REVISION DATES 11/07/08 04/30/09 07/08/09 01/15/10

SHEET 8 OF 10

ORIGINAL SCALE IN INCHES FOR REDUCED PLANS 0 1 2 3

OGS GEOTECHNICAL LOG OF TEST BORINGS SHEET (ENGLISH) (REV. 06-01-09)

DIST	COUNTY	ROUTE	POST MILES TOTAL PROJECT	SHEET No	TOTAL SHEETS
05	SLO	101	5.9/6.9	248	290

GEOTECHNICAL PROFESSIONAL — DATE 4/30/10

PLANS APPROVAL DATE

REGISTERED PROFESSIONAL ENGINEER — GARY PARIKH — No. G.E. 666 — Exp. 12/31/11 — GEOTECHNICAL — STATE OF CALIFORNIA

The State of California or its officers or agents shall not be responsible for the accuracy or completeness of scanned copies of this plan sheet.

PARIKH CONSULTANTS, INC.
2360 QUME DRIVE, SUITE A
SAN JOSE, CA 95131

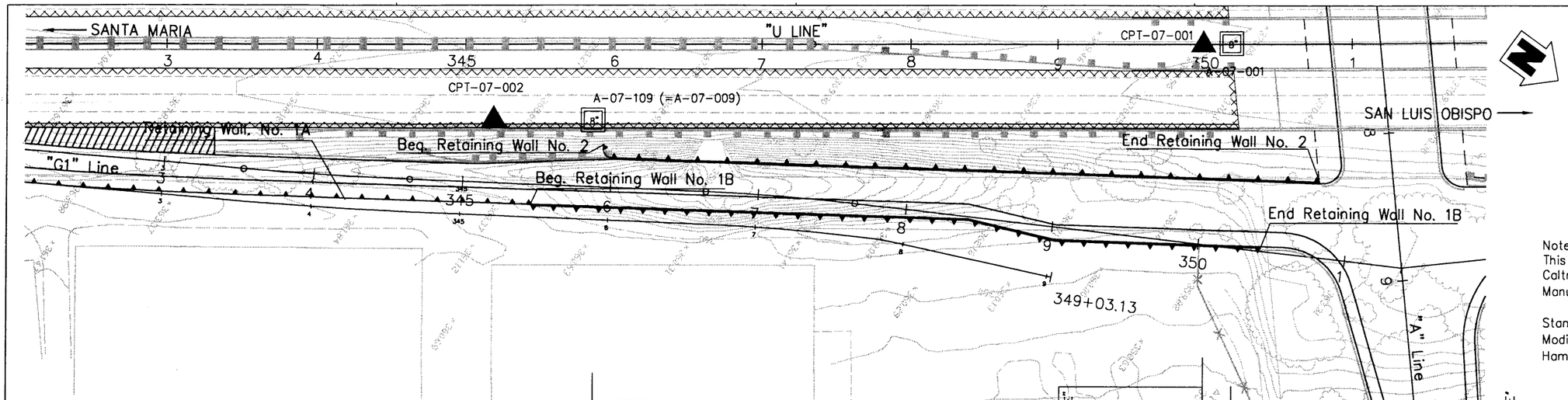

Notes:
This LOTB sheet was prepared in accordance with the Caltrans Soil & Rock Logging Classification, and Presentation Manual (June 2007)

Standard Penetration Test Sampler: I.D. = 1.4"; O.D. = 2"
Modified California Sampler: I.D. = 2.5"; O.D. = 3"
Hammer Assembly: A 140 lb hammer with a 30" drop

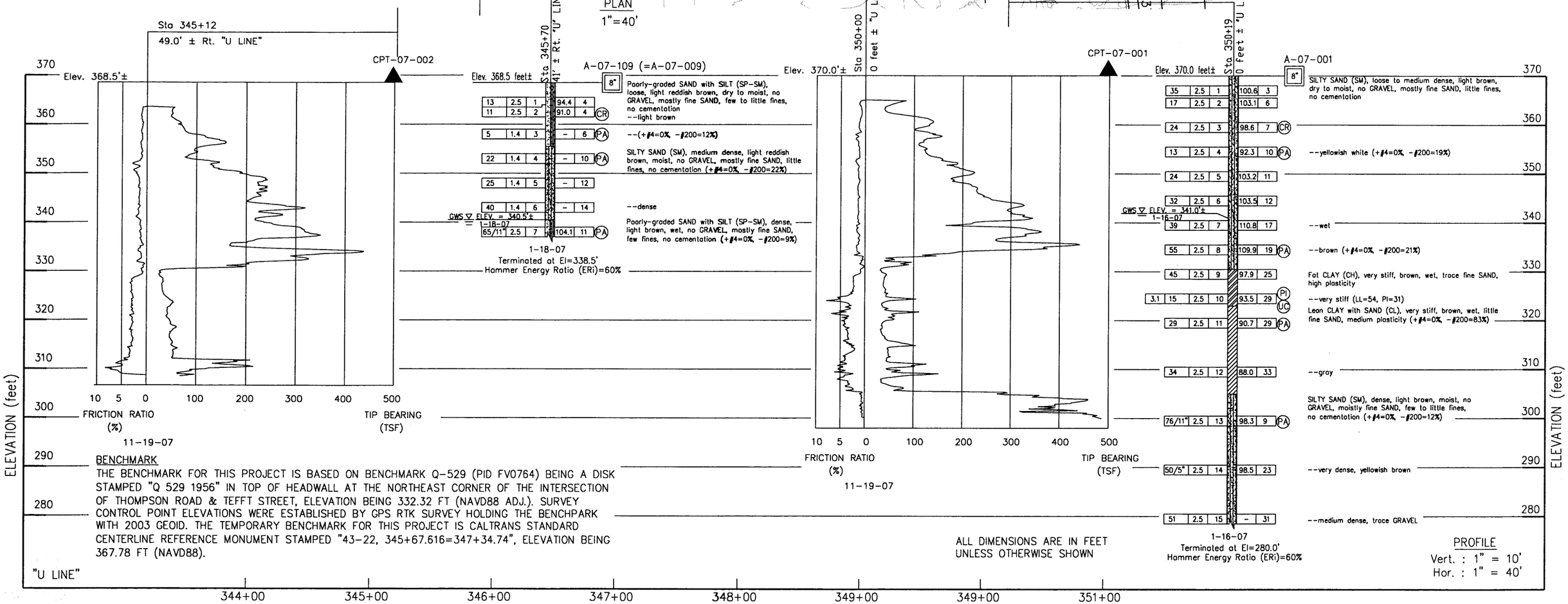

BENCHMARK
THE BENCHMARK FOR THIS PROJECT IS BASED ON BENCHMARK Q-529 (PID FV0764) BEING A DISK STAMPED "Q 529 1956" IN TOP OF HEADWALL AT THE NORTHEAST CORNER OF THE INTERSECTION OF THOMPSON ROAD & TEFFT STREET, ELEVATION BEING 332.32 FT (NAVD88 ADJ.). SURVEY CONTROL POINT ELEVATIONS WERE ESTABLISHED BY GPS RTK SURVEY HOLDING THE BENCHPARK WITH 2003 GEOID. THE TEMPORARY BENCHMARK FOR THIS PROJECT IS CALTRANS STANDARD CENTERLINE REFERENCE MONUMENT STAMPED "43-22, 345+67.616=347+34.74", ELEVATION BEING 367.78 FT (NAVD88).

ALL DIMENSIONS ARE IN FEET UNLESS OTHERWISE SHOWN

PROFILE
Vert. : 1" = 10'
Hor. : 1" = 40'

DESIGN OVERSIGHT	DRAWN BY	L. TRAN	L. BHANGOO	PREPARED FOR THE STATE OF CALIFORNIA DEPARTMENT OF TRANSPORTATION	D. WANG
SIGN OFF DATE	CHECKED BY	D. WANG	FIELD INVESTIGATION BY: DATE: JANUARY AND NOVEMBER 2007		PROJECT ENGINEER

BRIDGE NO. 49E0016 — POST MILES 6.45

WILLOW ROAD / ROUTE 101 INTERCHANGE

LOG OF TEST BORINGS 2 OF 3

CU 05
EA 474501

DGS GEOTECHNICAL LOG OF TEST BORINGS SHEET (ENGLISH) (REV. 06-01-09)

ORIGINAL SCALE IN INCHES FOR REDUCED PLANS 0 1 2 3

DISREGARD PRINTS BEARING EARLIER REVISION DATES — REVISION DATES 11/30/09 4/30/09 1/30/09 1/15/10

SHEET 9 OF 10

Apr 30, 2010 - 10:10am S:\VCAD\203125.gpt\LOTB (RW-18).dwg
tran

DIST	COUNTY	ROUTE	POST MILES TOTAL PROJECT	SHEET No	TOTAL SHEETS
05	SLO	101	5.9/6.9	249	290

GEOTECHNICAL PROFESSIONAL — DATE 4/30/10

PLANS APPROVAL DATE

REGISTERED PROFESSIONAL ENGINEER — GARY PARIKH — No. G.E. 666 — Exp. 12/31/11 — GEOTECHNICAL — STATE OF CALIFORNIA

The State of California or its officers or agents shall not be responsible for the accuracy or completeness of scanned copies of this plan sheet.

PARIKH CONSULTANTS, INC.
2360 QUME DRIVE, SUITE A
SAN JOSE, CA 95131

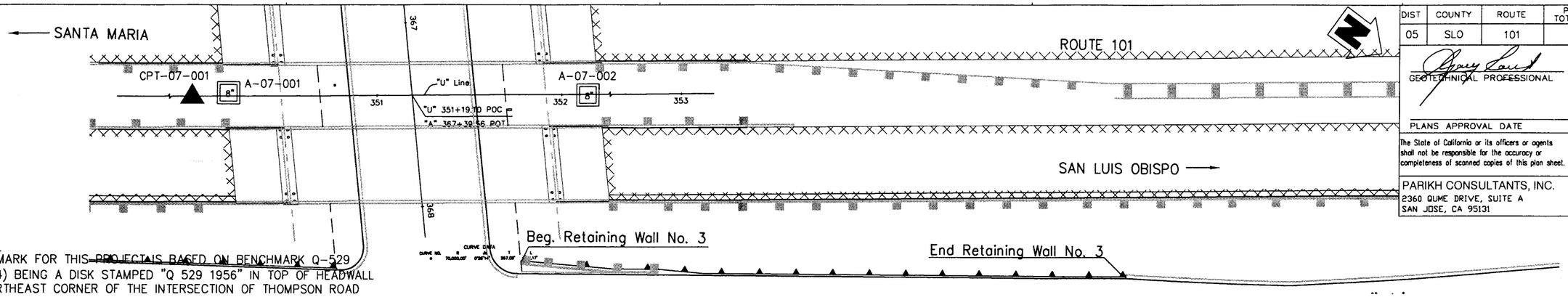

PLAN
1"=30'

BENCHMARK
THE BENCHMARK FOR THIS PROJECT IS BASED ON BENCHMARK Q-529 (PID FV0764) BEING A DISK STAMPED "Q 529 1956" IN TOP OF HEADWALL AT THE NORTHEAST CORNER OF THE INTERSECTION OF THOMPSON ROAD & TEFFT STREET, ELEVATION BEING 332.32 FT (NAVD88 ADJ.). SURVEY CONTROL POINT ELEVATIONS WERE ESTABLISHED BY GPS RTK SURVEY HOLDING THE BENCHPARK WITH 2003 GEOID. THE TEMPORARY BENCHMARK FOR THIS PROJECT IS CALTRANS STANDARD CENTERLINE REFERENCE MONUMENT STAMPED "43-22, 345+67.616=347+34.74", ELEVATION BEING 367.78 FT (NAVD88).

Notes:
This LOTB sheet was prepared in accordance with the Caltrans Soil & Rock Logging Classification, and Presentation Manual (June 2007)

Standard Penetration Test Sampler: I.D. = 1.4"; O.D. = 2"
Modified California Sampler: I.D. = 2.5"; O.D. = 3"
Hammer Assembly: A 140 lb hammer with a 30" drop

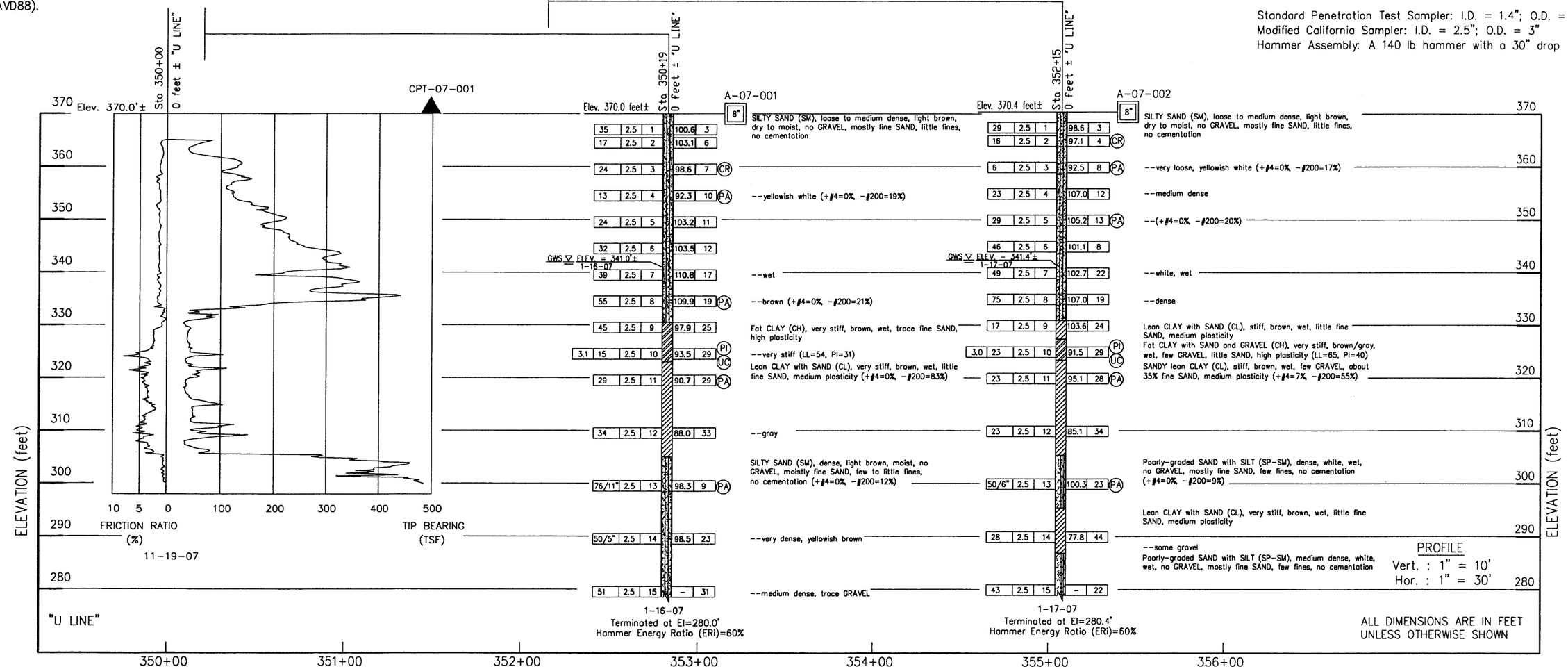

PROFILE
Vert. : 1" = 10'
Hor. : 1" = 30'

ALL DIMENSIONS ARE IN FEET UNLESS OTHERWISE SHOWN

DESIGN OVERSIGHT	DRAWN BY	L. TRAN	L. BHANGOO FIELD INVESTIGATION BY:	PREPARED FOR THE STATE OF CALIFORNIA DEPARTMENT OF TRANSPORTATION	D. WANG PROJECT ENGINEER
SIGN OFF DATE	CHECKED BY	D. WANG	DATE: JANUARY AND NOVEMBER 2007		

BRIDGE NO. 49E0016 — POST MILES 6.45

WILLOW ROAD / ROUTE 101 INTERCHANGE
LOG OF TEST BORINGS 3 OF 3

CU 05
EA 474501

ORIGINAL SCALE IN INCHES FOR REDUCED PLANS 0 1 2 3

DISREGARD PRINTS BEARING EARLIER REVISION DATES — REVISION DATES 11/07/08 04/28/09 07/09/09 1/15/10

SHEET 10 OF 10

OGS GEOTECHNICAL LOG OF TEST BORINGS SHEET (ENGLISH) (REV. 06-01-09)

Apr 30, 2010 - 10:10am S:\ACAD\203125.gpt\LOTB (Bridge 18).dwg

Dist	COUNTY	ROUTE	POST MILES TOTAL PROJECT	SHEET No.	TOTAL SHEETS
05	SLO	101	5.9/6.9	250	290

REGISTERED LANDSCAPE ARCHITECT — 05-05-10 DATE

LICENSED LANDSCAPE ARCHITECT · M. ANTHONY KEITH NO. 3673 · Signature · 10/31/10 Renewal Date · Date · STATE OF CALIFORNIA

PLANS APPROVAL DATE

THE STATE OF CALIFORNIA OR ITS OFFICERS OR AGENTS SHALL NOT BE RESPONSIBLE FOR THE ACCURACY OR COMPLETENESS OF SCANNED COPIES OF THIS PLAN SHEET.

RRM DESIGN GROUP
3765 S. HIGUERA ST., STE. 102
SAN LUIS OBISPO, CA 93401

COUNTY OF SAN LUIS OBISPO
DEPARTMENT OF PUBLIC WORKS
1050 MONTEREY STREET
SAN LUIS OBISPO, CA 93408

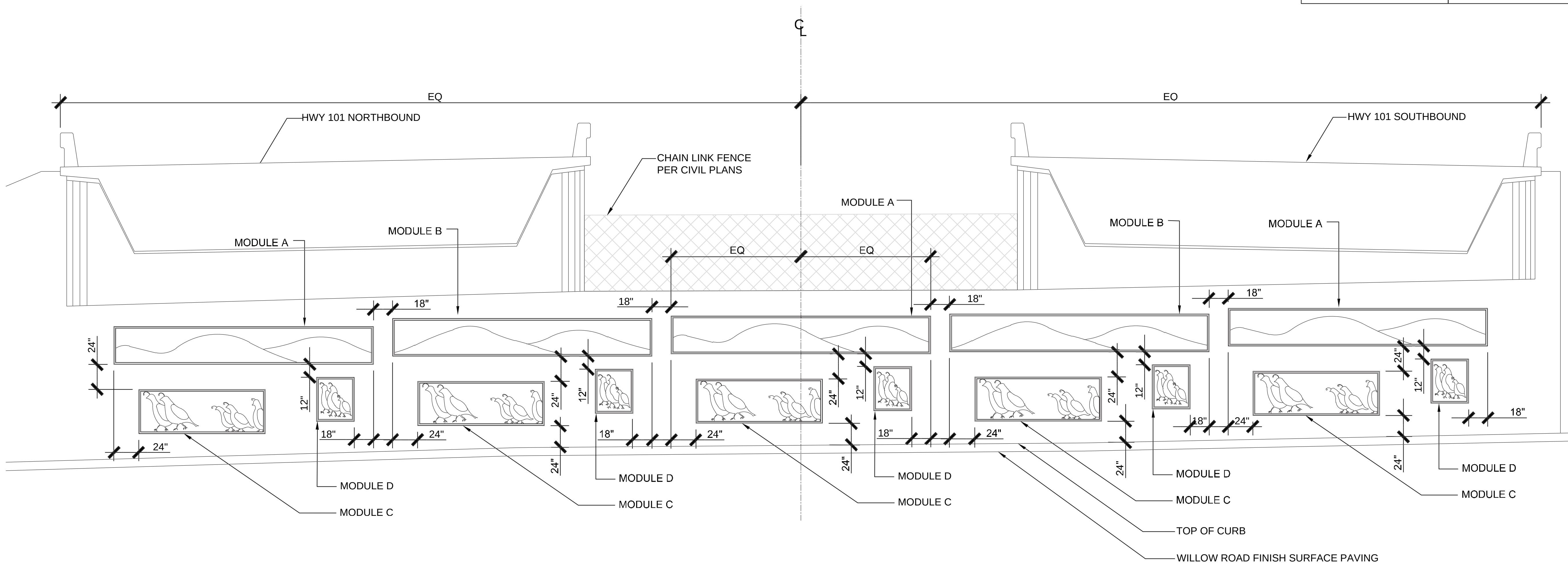

ABUTMENT 1 SLOPE PAVING

WILLOW ROAD EASTBOUND

NOTES:

A. ALL ART MODULES SHALL BE INSTALLED LEVEL.
B. QUAIL TO BE FACING IN DIRECTION OF TRAFFIC FLOW.
C. SEE CIVIL DRAWINGS FOR SLOPE PAVING AND BRIDGE DETAILS.
D. SEE ART MODULE DETAILS FOR FORMLINER AND CONCRETE STAMP DETAILS.
E. SLOPE PAVING ART MODULES SHALL BE STAMPED INTO CONCRETE. PROVIDE SHOP DRAWINGS INDICATING STAMP DIMENSIONS, TEXTURES, AND A COMPLETE LIST OF INSTALLATION ACCESSORIES, INCLUDING RELEASE AGENT.

THIS PLAN ACCURATE FOR ART WORK ONLY

SCALE: 1" = 4'

STATE OF CALIFORNIA - DEPARTMENT OF TRANSPORTATION
Caltrans®
SLOPE PAVING ART LAYOUT
CONSULTANT FUNCTIONAL SUPERVISOR: RRM DESIGN GROUP
CALCULATED-DESIGNED BY: LWIERSCHEM
CHECKED BY: LMCKAY
REVISED BY
DATE REVISED

DATE PLOTTED => $DATE
TIME PLOTTED => $TIME

LAST REVISION 05-05-10

SLOPE PAVING LAYOUT
A1

Dist	COUNTY	ROUTE	POST MILES TOTAL PROJECT	SHEET No.	TOTAL SHEETS
05	SLO	101	5.9/6.9	251	290

REGISTERED LANDSCAPE ARCHITECT — DATE 05-05-10

PLANS APPROVAL DATE

LICENSED LANDSCAPE ARCHITECT — W. ANTONY KEITH NO. 3623 — Signature — 10/31/10 Renewal Date — Date — STATE OF CALIFORNIA

THE STATE OF CALIFORNIA OR ITS OFFICERS OR AGENTS SHALL NOT BE RESPONSIBLE FOR THE ACCURACY OR COMPLETENESS OF SCANNED COPIES OF THIS PLAN SHEET.

RRM DESIGN GROUP
3765 S. HIGUERA ST., STE. 102
SAN LUIS OBISPO, CA 93401

COUNTY OF SAN LUIS OBISPO
DEPARTMENT OF PUBLIC WORKS
1050 MONTEREY STREET
SAN LUIS OBISPO, CA 93408

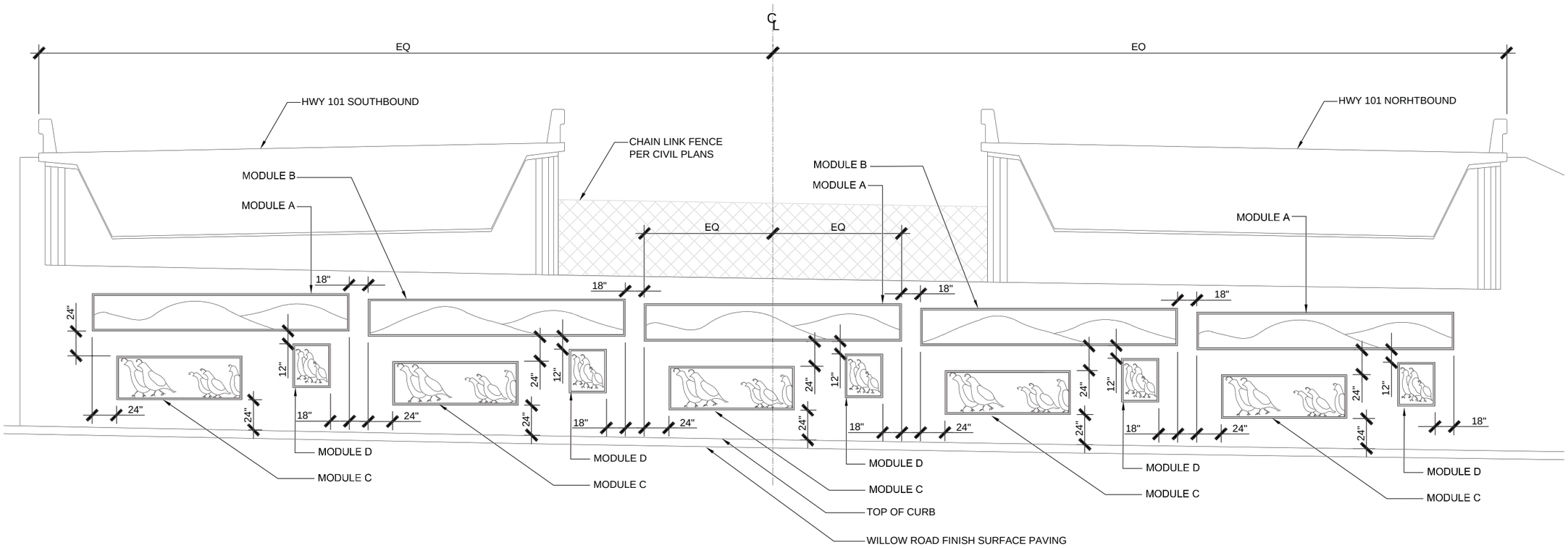

ABUTMENT 2 SLOPE PAVING

WILLOW ROAD WESTBOUND

NOTES:

A. ALL ART MODULES SHALL BE INSTALLED LEVEL.
B. QUAIL TO BE FACING IN DIRECTION OF TRAFFIC FLOW.
C. SEE CIVIL DRAWINGS FOR SLOPE PAVING AND BRIDGE DETAILS.
D. SEE ART MODULE DETAILS FOR FORMLINER AND CONCRETE STAMP DETAILS.
E. SLOPE PAVING ART MODULES SHALL BE STAMPED INTO CONCRETE.
PROVIDE SHOP DRAWINGS INDICATING STAMP DIMENSIONS, TEXTURES,
AND A COMPLETE LIST OF INSTALLATION ACCESSORIES, INCLUDING RELEASE AGENT.

THIS PLAN ACCURATE FOR ART WORK ONLY

SCALE: 1" = 4'

SLOPE PAVING LAYOUT
A2

REVISED BY | DATE REVISED
LWIERSCHEM | LMCKAY
CALCULATED-DESIGNED BY | CHECKED BY
CONSULTANT FUNCTIONAL SUPERVISOR: RRM DESIGN GROUP
STATE OF CALIFORNIA - DEPARTMENT OF TRANSPORTATION
SLOPE PAVING ART LAYOUT

LAST REVISION 05-05-10 | DATE PLOTTED => $DATE | TIME PLOTTED => $TIME

BORDER LAST REVISED 4/11/2008 | RELATIVE BORDER SCALE IS IN INCHES 0 1 2 3 | USERNAME => $USER | DGN FILE => $REQUEST | CU | EA 05-474503

Dist	COUNTY	ROUTE	POST MILES TOTAL PROJECT	SHEET No.	TOTAL SHEETS
05	SLO	101	5.9/6.9	252	290

REGISTERED LANDSCAPE ARCHITECT — DATE: 05-05-10

PLANS APPROVAL DATE

LICENSED LANDSCAPE ARCHITECT — M. ANTONY KEITH NO. 3623 — Signature — 10/31/10 Renewal Date — Date — STATE OF CALIFORNIA

THE STATE OF CALIFORNIA OR ITS OFFICERS OR AGENTS SHALL NOT BE RESPONSIBLE FOR THE ACCURACY OR COMPLETENESS OF SCANNED COPIES OF THIS PLAN SHEET.

RRM DESIGN GROUP
3765 S. HIGUERA ST., STE. 102
SAN LUIS OBISPO, CA 93401

COUNTY OF SAN LUIS OBISPO
DEPARTMENT OF PUBLIC WORKS
1050 MONTEREY STREET
SAN LUIS OBISPO, CA 93408

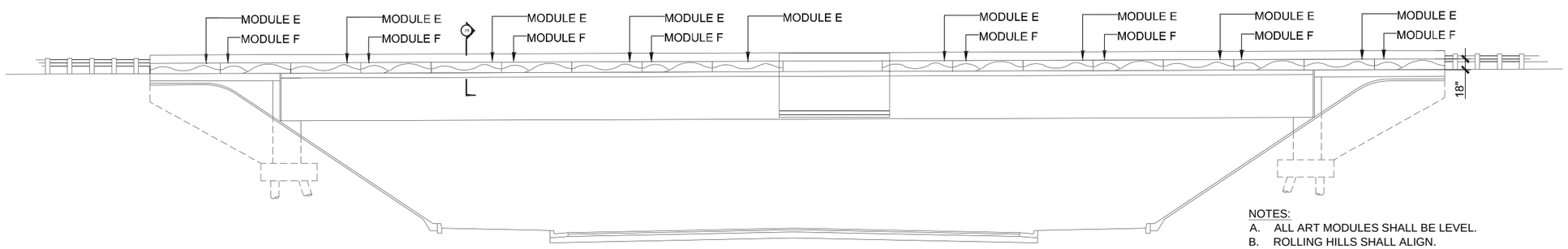

ELEVATION

BRIDGE BARRIER FORMLINER PATTERN
FINISHED CONCRETE SURFACE

NOTES:

A. ALL ART MODULES SHALL BE LEVEL.
B. ROLLING HILLS SHALL ALIGN.
C. SEE CIVIL DRAWINGS FOR BRIDGE DETAILS.
D. ART MODULES SHALL BE CENTERED BETWEEN EXPANSION JOINTS AND/OR WEAKENED PLANES.
E. SEE ART MODULE DETAILS FOR FORMLINER AND CONCRETE STAMP DETAILS.
F. WALL ART MODULES SHALL BE FORMLINED INTO CONCRETE. PROVIDE SHOP DRAWINGS INDICATING EXACT LAYOUT ON CONCRETE SURFACES, FORMLINER DIMENSIONS, TEXTURES, AND A COMPLETE LIST OF INSTALLATION ACCESSORIES, INCLUDING RELEASE AGENT.

THIS PLAN ACCURATE FOR ART WORK ONLY

8 0 4 8 16 32
SCALE: 1" = 8'

BRIDGE BARRIER ART LAYOUT
A3

STATE OF CALIFORNIA - DEPARTMENT OF TRANSPORTATION
Caltrans
WALL ART LAYOUT

CONSULTANT FUNCTIONAL SUPERVISOR: RRM DESIGN GROUP

CALCULATED-DESIGNED BY: LWIERSCHEM
CHECKED BY: LMCKAY
REVISED BY
DATE REVISED

DATE PLOTTED => $DATE
TIME PLOTTED => $TIME
LAST REVISION 05-05-10

BORDER LAST REVISED 4/11/2008 | RELATIVE BORDER SCALE IS IN INCHES 0 1 2 3 | USERNAME => $USER | DGN FILE => $REQUEST | CU | EA 05-474503

Dist	COUNTY	ROUTE	POST MILES TOTAL PROJECT	SHEET No.	TOTAL SHEETS
05	SLO	101	5.9/6.9	253	290

REGISTERED LANDSCAPE ARCHITECT — DATE 05-05-10

PLANS APPROVAL DATE

LICENSED LANDSCAPE ARCHITECT — W. ANTONY KEITH NO. 3873 — Signature — 10/31/10 Renewal Date — Date — STATE OF CALIFORNIA

THE STATE OF CALIFORNIA OR ITS OFFICERS OR AGENTS SHALL NOT BE RESPONSIBLE FOR THE ACCURACY OR COMPLETENESS OF SCANNED COPIES OF THIS PLAN SHEET.

RRM DESIGN GROUP
3765 S. HIGUERA ST., STE. 102
SAN LUIS OBISPO, CA 93401

COUNTY OF SAN LUIS OBISPO
DEPARTMENT OF PUBLIC WORKS
1050 MONTEREY STREET
SAN LUIS OBISPO, CA 93408

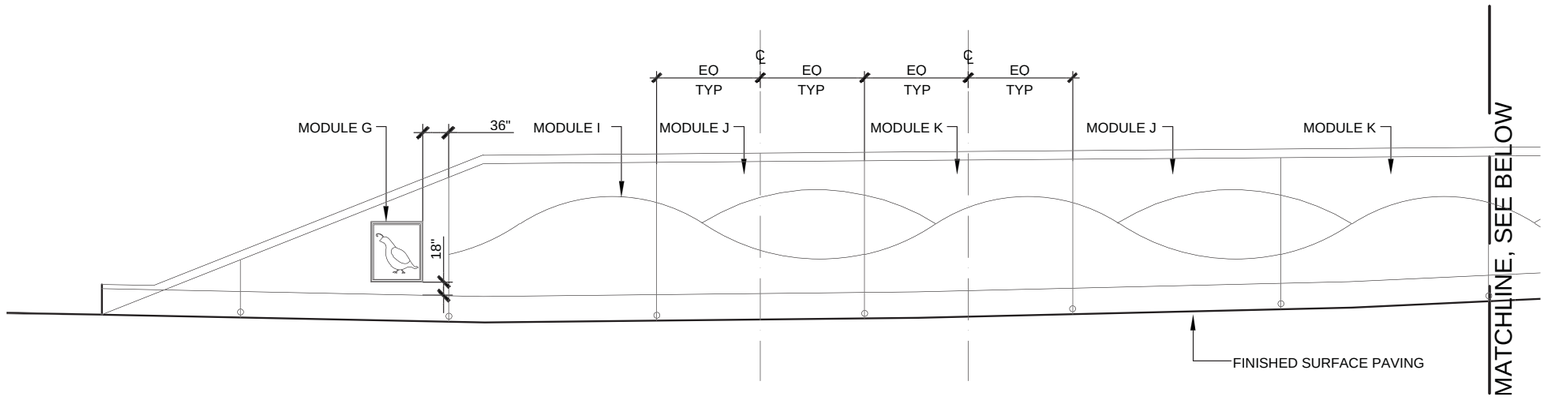

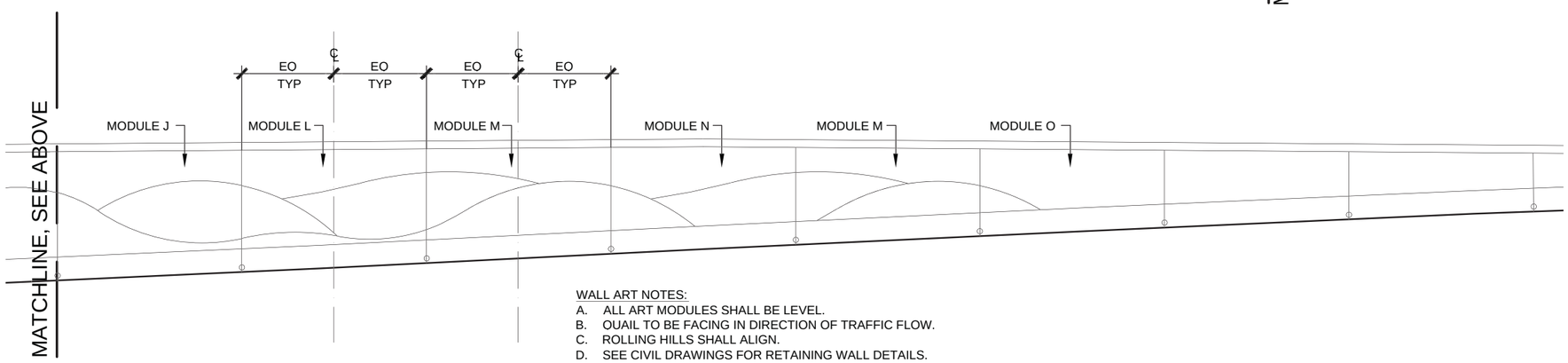

WALL ART NOTES:

A. ALL ART MODULES SHALL BE LEVEL.
B. OUAIL TO BE FACING IN DIRECTION OF TRAFFIC FLOW.
C. ROLLING HILLS SHALL ALIGN.
D. SEE CIVIL DRAWINGS FOR RETAINING WALL DETAILS.
E. ART MODULES SHALL BE CENTERED BETWEEN EXPANSION JOINTS AND/OR WEAKENED PLANES.
F. SEE ART MODULE DETAILS FOR FORMLINER AND CONCRETE STAMP DETAILS.
G. WALL ART MODULES SHALL BE FORMLINED INTO CONCRETE. PROVIDE SHOP DRAWINGS INDICATING FORMLINER DIMENSIONS, TEXTURES, AND A COMPLETE LIST OF INSTALLATION ACCESSORIES, INCLUDING RELEASE AGENT.
H. TEXTURE "B" - HEAVY SANDBLAST - SHALL BE APPLIED TO WALL WHERE MODULE HAS NOT BEEN PLACED.

RW NO. 1B - SEE CIVIL PLANS FOR LOCATION

THIS PLAN ACCURATE FOR ART WORK ONLY

SCALE: 1" = 8'

WALL ART LAYOUT
A4

STATE OF CALIFORNIA - DEPARTMENT OF TRANSPORTATION — Caltrans
CONSULTANT FUNCTIONAL SUPERVISOR: RRM DESIGN GROUP
CALCULATED-DESIGNED BY: LWIERSCHEM — CHECKED BY: LMCKAY — REVISED BY — DATE REVISED

LAST REVISION 05-05-10 — DATE PLOTTED => $DATE — TIME PLOTTED => $TIME

BORDER LAST REVISED 4/11/2008 — RELATIVE BORDER SCALE IS IN INCHES 0 1 2 3 — USERNAME => $USER — DGN FILE => $REQUEST — CU — EA 05-474503

Dist	COUNTY	ROUTE	POST MILES TOTAL PROJECT	SHEET No.	TOTAL SHEETS
05	SLO	101	5.9/6.9	254	290

REGISTERED LANDSCAPE ARCHITECT — DATE 05-05-10

PLANS APPROVAL DATE

LICENSED LANDSCAPE ARCHITECT — M. ANTYONE KEITH NO. 3825 — Signature — 10/31/10 Renewal Date — Date — STATE OF CALIFORNIA

THE STATE OF CALIFORNIA OR ITS OFFICERS OR AGENTS SHALL NOT BE RESPONSIBLE FOR THE ACCURACY OR COMPLETENESS OF SCANNED COPIES OF THIS PLAN SHEET.

RRM DESIGN GROUP
3765 S. HIGUERA ST., STE. 102
SAN LUIS OBISPO, CA 93401

COUNTY OF SAN LUIS OBISPO
DEPARTMENT OF PUBLIC WORKS
1050 MONTEREY STREET
SAN LUIS OBISPO, CA 93408

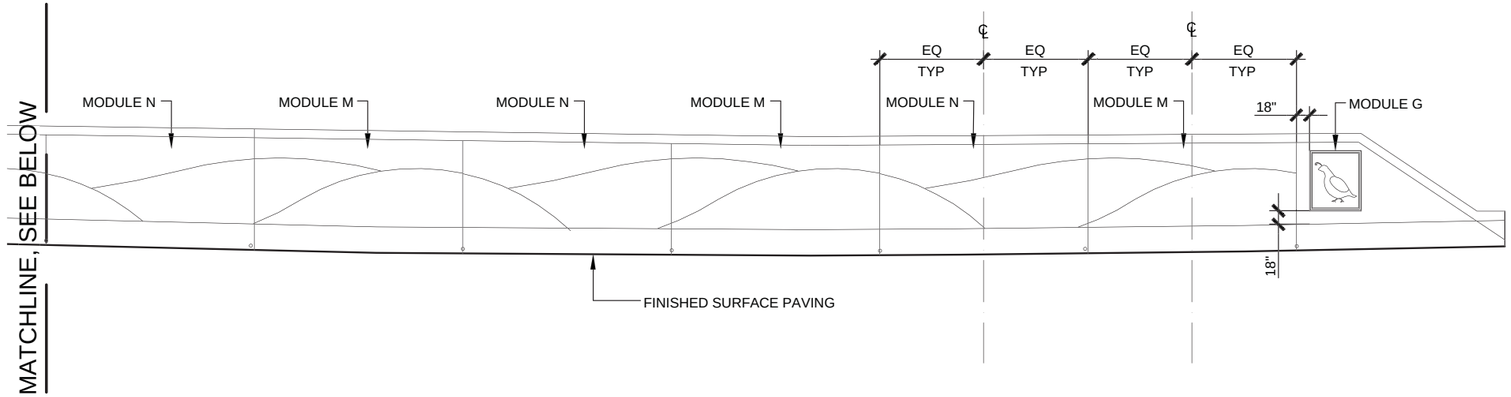

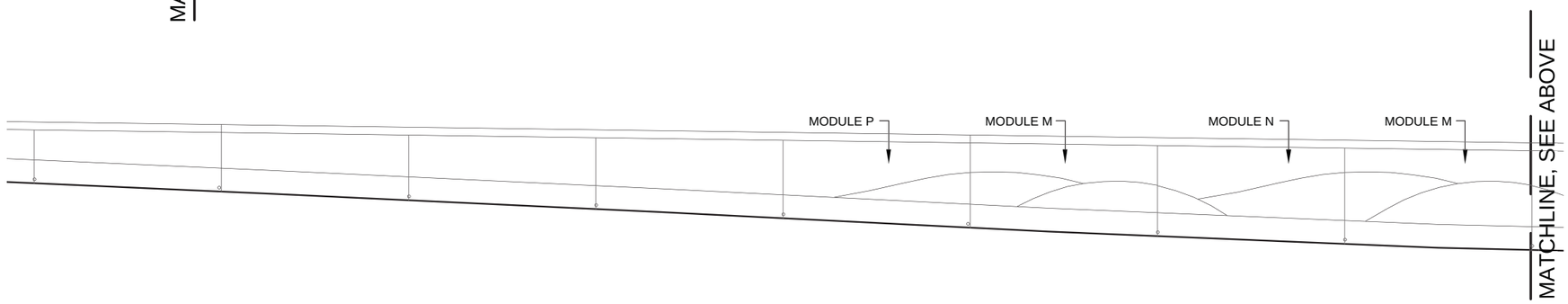

RW NO. 2 - SEE CIVIL PLANS FOR LOCATION

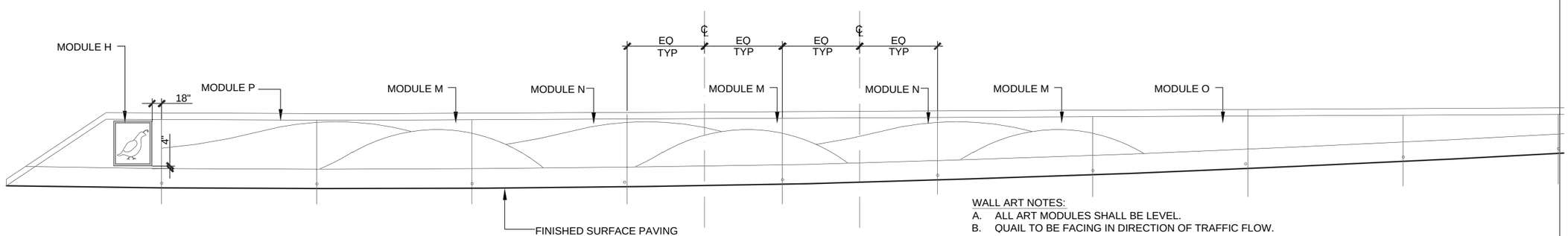

WALL ART NOTES:

A. ALL ART MODULES SHALL BE LEVEL.
B. QUAIL TO BE FACING IN DIRECTION OF TRAFFIC FLOW.
C. ROLLING HILLS SHALL ALIGN.
D. SEE CIVIL DRAWINGS FOR RETAINING WALL DETAILS.
E. ART MODULES SHALL BE CENTERED BETWEEN EXPANSION JOINTS AND/OR WEAKENED PLANES.
F. SEE ART MODULE DETAILS FOR FORMLINER AND CONCRETE STAMP DETAILS.
G. WALL ART MODULES SHALL BE FORMLINED INTO CONCRETE. PROVIDE SHOP DRAWINGS INDICATING FORMLINER DIMENSIONS, TEXTURES, AND A COMPLETE LIST OF INSTALLATION ACCESSORIES, INCLUDING RELEASE AGENT.
H. TEXTURE "B" - HEAVY SANDBLAST - SHALL BE APPLIED TO WALL WHERE MODULE HAS NOT BEEN PLACED.

RW NO. 3 - SEE CIVIL PLANS FOR LOCATION

THIS PLAN ACCURATE FOR ART WORK ONLY

SCALE: 1" = 8'

WALL ART LAYOUT
A5

STATE OF CALIFORNIA - DEPARTMENT OF TRANSPORTATION — Caltrans
CONSULTANT FUNCTIONAL SUPERVISOR: RRM DESIGN GROUP
CALCULATED-DESIGNED BY: LWIERSCHEM — CHECKED BY: LMCKAY
REVISED BY — DATE REVISED
DATE PLOTTED => $DATE — TIME PLOTTED => $TIME
LAST REVISION 05-05-10

BORDER LAST REVISED 4/11/2008 — RELATIVE BORDER SCALE IS IN INCHES 0 1 2 3 — USERNAME => $USER — DGN FILE => $REQUEST — CU — EA 05-474503

Dist	COUNTY	ROUTE	POST MILES TOTAL PROJECT	SHEET No.	TOTAL SHEETS
05	SLO	101	5.9/6.9	255	290

Tony Keith
REGISTERED LANDSCAPE ARCHITECT — 05-05-10 DATE

PLANS APPROVAL DATE

LICENSED LANDSCAPE ARCHITECT — W. ANTONY KEITH NO. 3873 — Signature — 10/31/10 Renewal Date — Date — STATE OF CALIFORNIA

THE STATE OF CALIFORNIA OR ITS OFFICERS OR AGENTS SHALL NOT BE RESPONSIBLE FOR THE ACCURACY OR COMPLETENESS OF SCANNED COPIES OF THIS PLAN SHEET.

RRM DESIGN GROUP
3765 S. HIGUERA ST., STE. 102
SAN LUIS OBISPO, CA 93401

COUNTY OF SAN LUIS OBISPO
DEPARTMENT OF PUBLIC WORKS
1050 MONTEREY STREET
SAN LUIS OBISPO, CA 93408

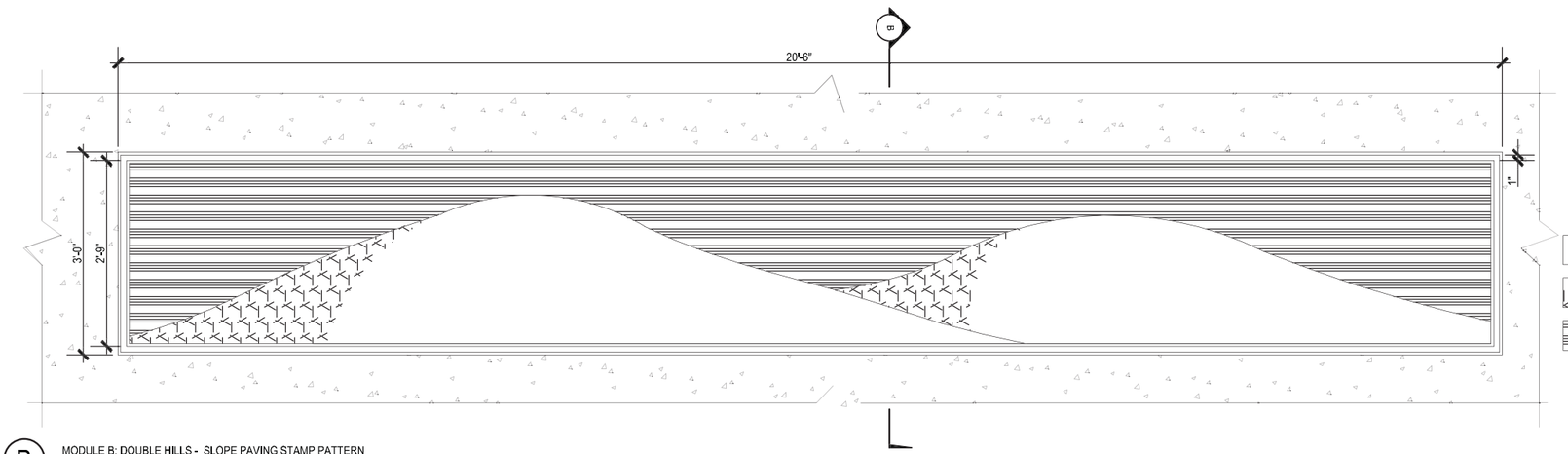

TEXTURE "A": SMOOTH FORM
TEXTURE "B": HEAVY SANDBLAST
TEXTURE "C": FLUTED RIB

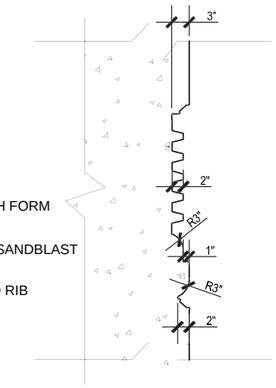

SECTION B

B MODULE B: DOUBLE HILLS - SLOPE PAVING STAMP PATTERN

1" = 1'-0"

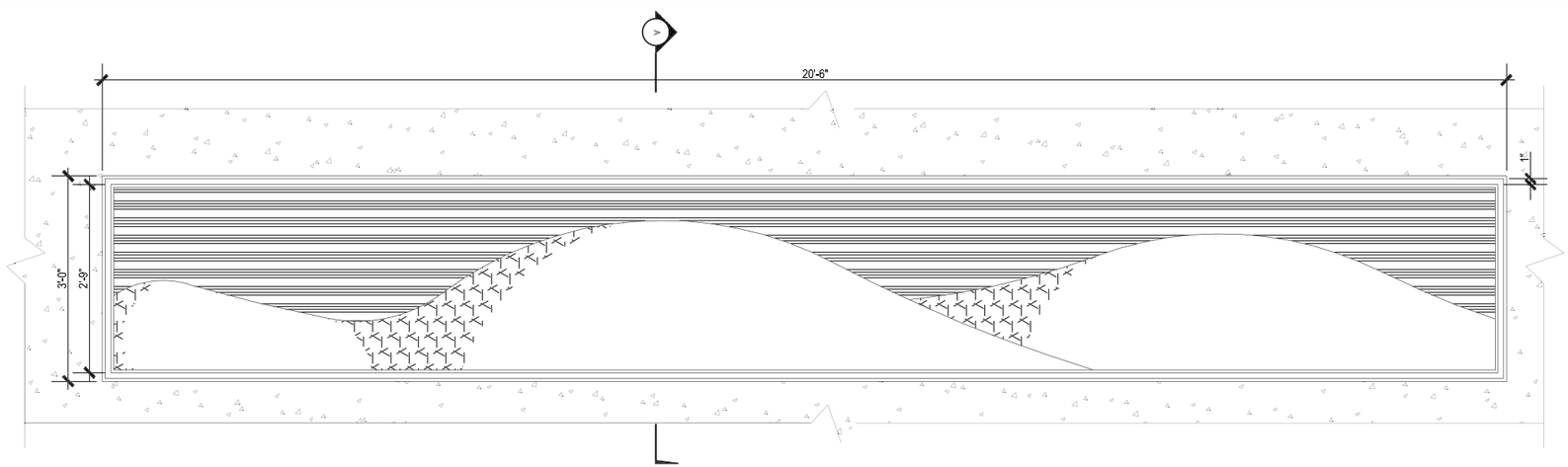

TEXTURE "A": SMOOTH FORM
TEXTURE "B": HEAVY SANDBLAST
TEXTURE "C": FLUTED RIB

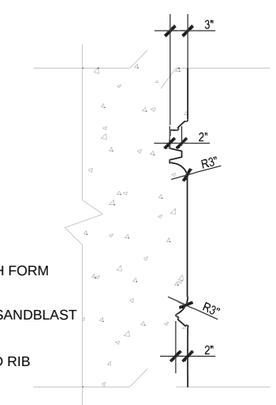

SECTION A

A MODULE A: TRIPLE HILLS - SLOPE PAVING STAMP PATTERN

THIS PLAN ACCURATE FOR ART WORK ONLY

1" = 1'-0"

DETAILS
A6

STATE OF CALIFORNIA - DEPARTMENT OF TRANSPORTATION
Caltrans
CONSULTANT FUNCTIONAL SUPERVISOR: RRM DESIGN GROUP
ART DETAILS

REVISED BY: LWIERSCHEM — DATE REVISED: LMCKAY
CALCULATED-DESIGNED BY — CHECKED BY

DATE PLOTTED => $DATE
TIME PLOTTED => $TIME
LAST REVISION 05-05-10

BORDER LAST REVISED 4/11/2008 | RELATIVE BORDER SCALE IS IN INCHES 0 1 2 3 | USERNAME => $USER | DGN FILE => $REQUEST | CU | EA 05-474503

Dist	COUNTY	ROUTE	POST MILES TOTAL PROJECT	SHEET No.	TOTAL SHEETS
05	SLO	101	5.9/6.9	256	290

REGISTERED LANDSCAPE ARCHITECT — DATE: 05-05-10

PLANS APPROVAL DATE

LICENSED LANDSCAPE ARCHITECT — M. ANTONY KEITH NO. 3673 — Signature — 10/31/10 Renewal Date — Date — STATE OF CALIFORNIA

THE STATE OF CALIFORNIA OR ITS OFFICERS OR AGENTS SHALL NOT BE RESPONSIBLE FOR THE ACCURACY OR COMPLETENESS OF SCANNED COPIES OF THIS PLAN SHEET.

RRM DESIGN GROUP
3765 S. HIGUERA ST., STE. 102
SAN LUIS OBISPO, CA 93401

COUNTY OF SAN LUIS OBISPO
DEPARTMENT OF PUBLIC WORKS
1050 MONTEREY STREET
SAN LUIS OBISPO, CA 93408

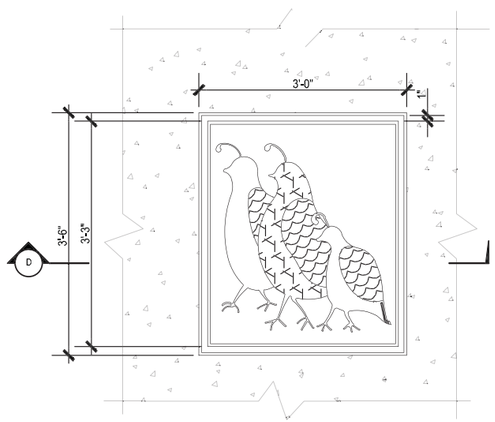

TEXTURE "A": SMOOTH FORM

TEXTURE "B": HEAVY SANDBLAST

TEXTURE "D": FEATHERS

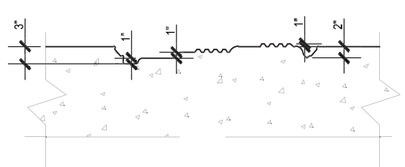

SECTION D

D — MODULE D: THREE QUAIL - SLOPE PAVING STAMP PATTERN

1" = 1'-0"

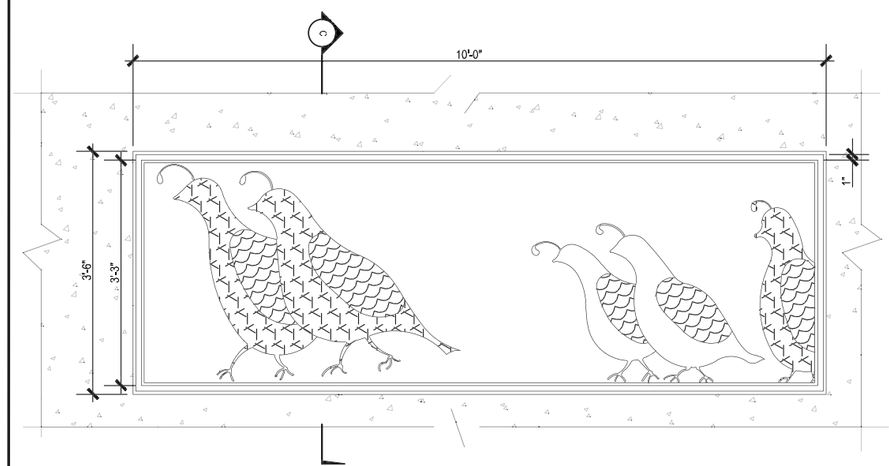

TEXTURE "A": SMOOTH FORM

TEXTURE "B": HEAVY SANDBLAST

TEXTURE "D": FEATHERS

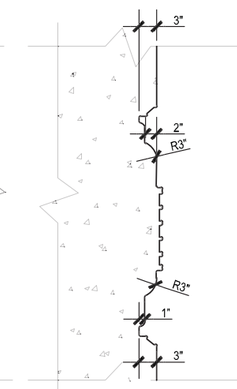

SECTION C

C — MODULE C: FIVE QUAIL - SLOPE PAVING STAMP PATTERN

1" = 1'-0"

THIS PLAN ACCURATE FOR ART WORK ONLY

STATE OF CALIFORNIA - DEPARTMENT OF TRANSPORTATION

Caltrans

ART DETAILS

CONSULTANT FUNCTIONAL SUPERVISOR: RRM DESIGN GROUP

CALCULATED-DESIGNED BY: LWIERSCHEM

CHECKED BY: LMCKAY

REVISED BY

DATE REVISED

DETAILS
A7

LAST REVISION 05-05-10

DATE PLOTTED => $DATE
TIME PLOTTED => $TIME

BORDER LAST REVISED 4/11/2008

RELATIVE BORDER SCALE IS IN INCHES 0 1 2 3

USERNAME => $USER
DGN FILE => $REQUEST

CU

EA 05-474503

Dist	COUNTY	ROUTE	POST MILES TOTAL PROJECT	SHEET No.	TOTAL SHEETS
05	SLO	101	5.9/6.9	257	290

REGISTERED LANDSCAPE ARCHITECT — DATE 05-05-10

PLANS APPROVAL DATE

LICENSED LANDSCAPE ARCHITECT — M. ANTONY KEITH NO. 3873 — Signature — 10/31/10 Renewal Date — Date — STATE OF CALIFORNIA

THE STATE OF CALIFORNIA OR ITS OFFICERS OR AGENTS SHALL NOT BE RESPONSIBLE FOR THE ACCURACY OR COMPLETENESS OF SCANNED COPIES OF THIS PLAN SHEET.

RRM DESIGN GROUP
3765 S. HIGUERA ST., STE. 102
SAN LUIS OBISPO, CA 93401

COUNTY OF SAN LUIS OBISPO
DEPARTMENT OF PUBLIC WORKS
1050 MONTEREY STREET
SAN LUIS OBISPO, CA 93408

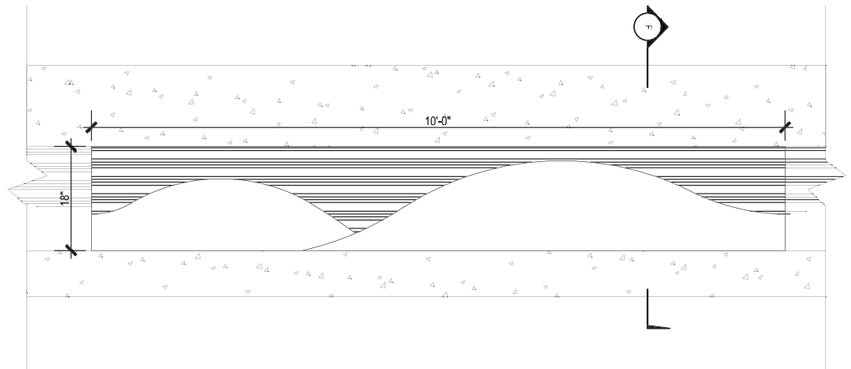

TEXTURE "A": SMOOTH FORM

TEXTURE "C": FLUTED RIB

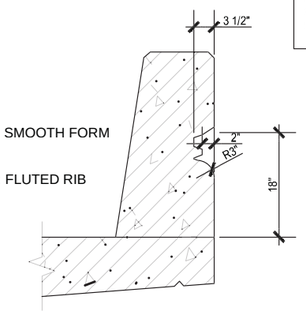

SECTION F

F — MODULE F: ROLLING HILLS - BARRIER FORMLINER PATTERN

1" = 1'-0"

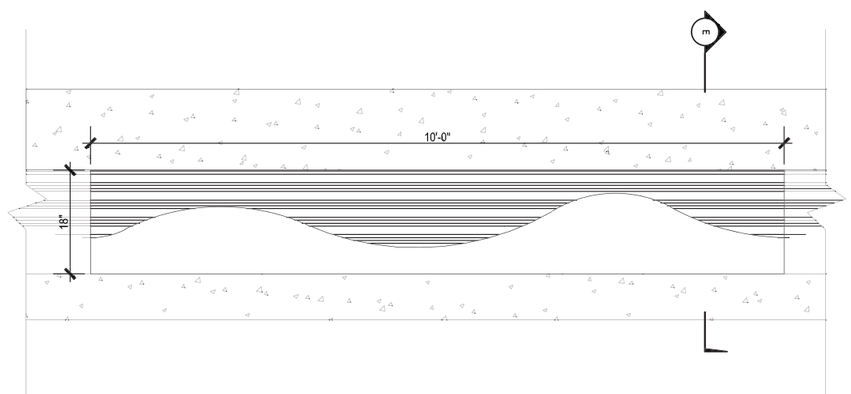

TEXTURE "A": SMOOTH FORM

TEXTURE "C": FLUTED RIB

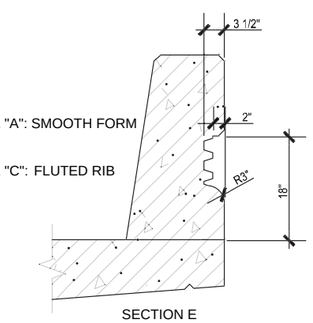

SECTION E

E — MODULE E: ROLLING HILLS - BARRIER FORMLINER PATTERN

1" = 1'-0"

THIS PLAN ACCURATE FOR ART WORK ONLY

DETAILS
A8

REVISED BY	
DATE REVISED	
LWIERSCHEM	
LMCKAY	
CALCULATED-DESIGNED BY	
CHECKED BY	
CONSULTANT FUNCTIONAL SUPERVISOR	RRM DESIGN GROUP
STATE OF CALIFORNIA - DEPARTMENT OF TRANSPORTATION	ART DETAILS

DATE PLOTTED => $DATE
TIME PLOTTED => $TIME
LAST REVISION 05-05-10

BORDER LAST REVISED 4/11/2008 | RELATIVE BORDER SCALE IS IN INCHES 0 1 2 3 | USERNAME => $USER | DGN FILE => $REQUEST | CU | EA 05-474503

Dist	COUNTY	ROUTE	POST MILES TOTAL PROJECT	SHEET No.	TOTAL SHEETS
05	SLO	101	5.9/6.9	258	290

Tony Keith — REGISTERED LANDSCAPE ARCHITECT — 05-05-10 DATE

PLANS APPROVAL DATE

LICENSED LANDSCAPE ARCHITECT — M. ANTHONY KEITH NO. 3873 — Signature — 10/31/10 Renewal Date — Date — STATE OF CALIFORNIA

THE STATE OF CALIFORNIA OR ITS OFFICERS OR AGENTS SHALL NOT BE RESPONSIBLE FOR THE ACCURACY OR COMPLETENESS OF SCANNED COPIES OF THIS PLAN SHEET.

RRM DESIGN GROUP
3765 S. HIGUERA ST., STE. 102
SAN LUIS OBISPO, CA 93401

COUNTY OF SAN LUIS OBISPO
DEPARTMENT OF PUBLIC WORKS
1050 MONTEREY STREET
SAN LUIS OBISPO, CA 93408

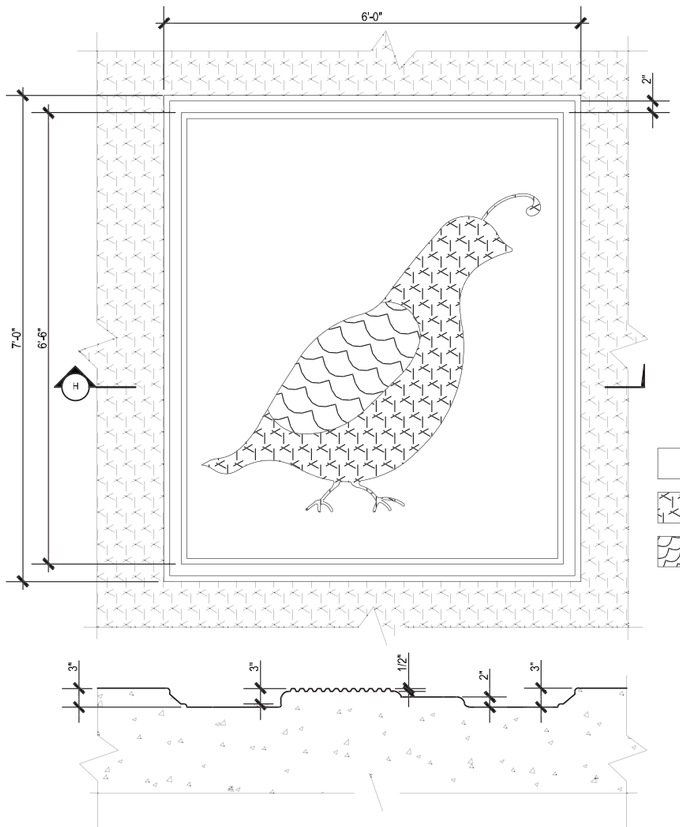

TEXTURE "A": SMOOTH FORM
TEXTURE "B": HEAVY SANDBLAST
TEXTURE "D": FEATHERS

SECTION H

H — MODULE H: SINGLE QUAIL RETAINING WALL FORMLINER PATTERN 1"=1'-0"

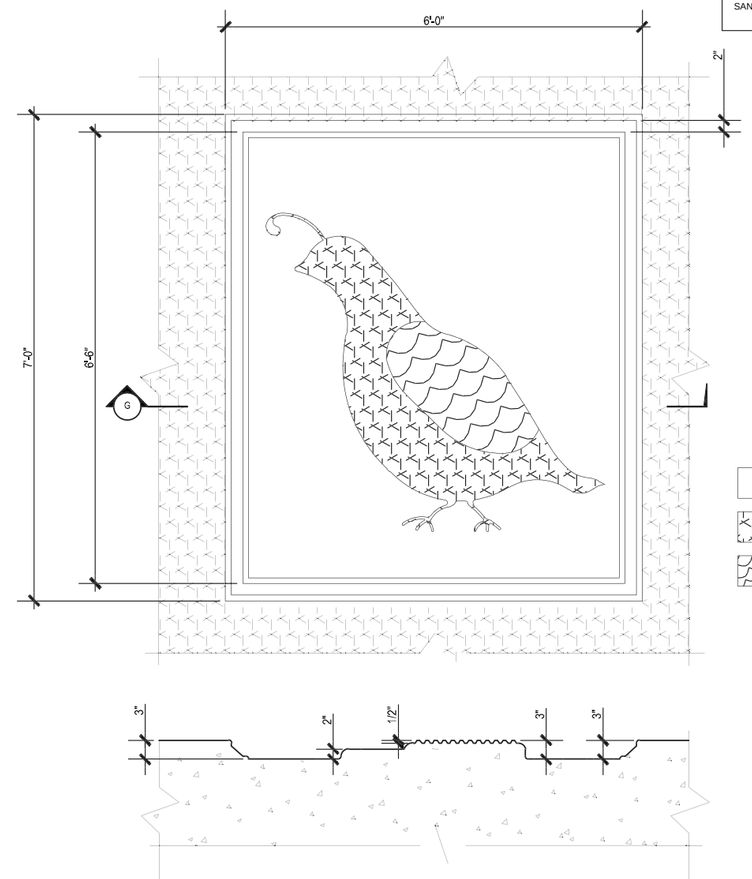

TEXTURE "A": SMOOTH FORM
TEXTURE "B": HEAVY SANDBLAST
TEXTURE "D": FEATHERS

SECTION G

G — MODULE G: SINGLE QUAIL RETAINING WALL FORMLINER PATTERN 1"=1'-0"

THIS PLAN ACCURATE FOR ART WORK ONLY

DETAILS
A9

STATE OF CALIFORNIA - DEPARTMENT OF TRANSPORTATION
Caltrans
CONSULTANT FUNCTIONAL SUPERVISOR: RRM DESIGN GROUP
ART DETAILS
CALCULATED-DESIGNED BY: LWIERSCHEM
CHECKED BY: LMCKAY
REVISED BY
DATE REVISED

DATE PLOTTED => $DATE
TIME PLOTTED => $TIME
LAST REVISION 05-05-10

BORDER LAST REVISED 4/11/2008 | RELATIVE BORDER SCALE IS IN INCHES 0 1 2 3 | USERNAME => $USER | DGN FILE => $REQUEST | CU | EA 05-474503

Dist	COUNTY	ROUTE	POST MILES TOTAL PROJECT	SHEET No.	TOTAL SHEETS
05	SLO	101	5.9/6.9	259	290

REGISTERED LANDSCAPE ARCHITECT — DATE 05-05-10

PLANS APPROVAL DATE

LICENSED LANDSCAPE ARCHITECT — M. ANTONY KEITH NO. 3873 — Signature — 10/31/10 Renewal Date — Date — STATE OF CALIFORNIA

THE STATE OF CALIFORNIA OR ITS OFFICERS OR AGENTS SHALL NOT BE RESPONSIBLE FOR THE ACCURACY OR COMPLETENESS OF SCANNED COPIES OF THIS PLAN SHEET.

RRM DESIGN GROUP
3765 S. HIGUERA ST., STE. 102
SAN LUIS OBISPO, CA 93401

COUNTY OF SAN LUIS OBISPO
DEPARTMENT OF PUBLIC WORKS
1050 MONTEREY STREET
SAN LUIS OBISPO, CA 93408

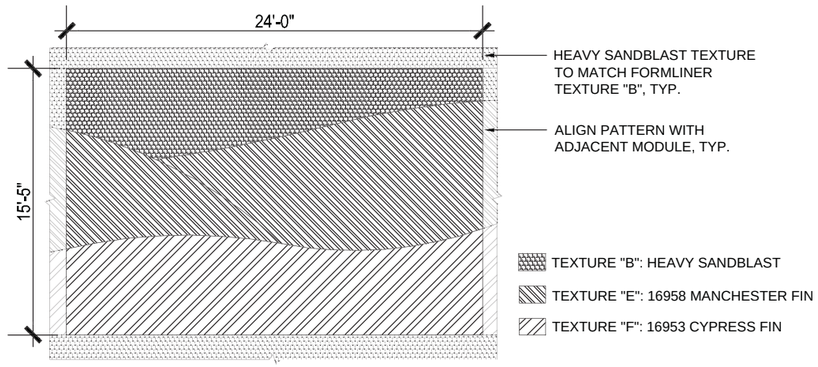

L — MODULE L: ROLLING HILLS - RETAINING WALL FORMLINER PATTERN
1/4" = 1'-0"

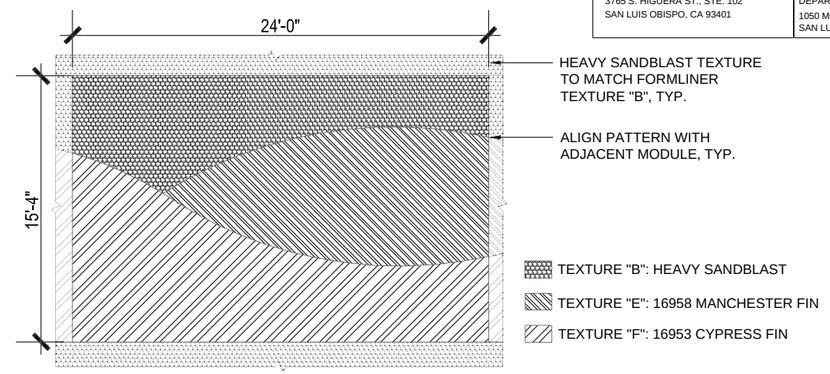

J — MODULE J: ROLLING HILLS - RETAINING WALL FORMLINER PATTERN
1/4" = 1'-0"

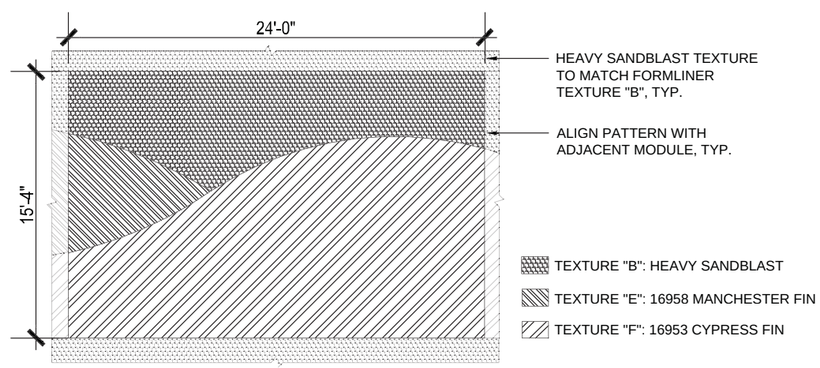

K — MODULE K: ROLLING HILLS - RETAINING WALL FORMLINER PATTERN
1/4" = 1'-0"

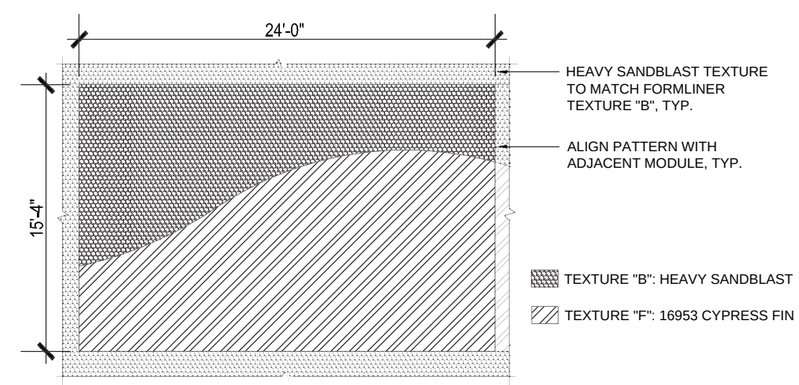

I — MODULE I: ROLLING HILLS - RETAINING WALL FORMLINER PATTERN
1/4" = 1'-0"

THIS PLAN ACCURATE FOR ART WORK ONLY

DETAILS A10

STATE OF CALIFORNIA - DEPARTMENT OF TRANSPORTATION — Caltrans

ART DETAILS

CONSULTANT FUNCTIONAL SUPERVISOR: RRM DESIGN GROUP

CALCULATED-DESIGNED BY: LWIERSCHEM — CHECKED BY: LMCKAY — REVISED BY — DATE REVISED

DATE PLOTTED => $DATE — TIME PLOTTED => $TIME — LAST REVISION 05-05-10

Dist	COUNTY	ROUTE	POST MILES TOTAL PROJECT	SHEET No.	TOTAL SHEETS
05	SLO	101	5.9/6.9	260	290

REGISTERED LANDSCAPE ARCHITECT — DATE 05-05-10

PLANS APPROVAL DATE

LICENSED LANDSCAPE ARCHITECT — M. ANTONY KEITH NO. 3873 — Signature — Renewal Date 10/31/10 — Date — STATE OF CALIFORNIA

THE STATE OF CALIFORNIA OR ITS OFFICERS OR AGENTS SHALL NOT BE RESPONSIBLE FOR THE ACCURACY OR COMPLETENESS OF SCANNED COPIES OF THIS PLAN SHEET.

RRM DESIGN GROUP
3765 S. HIGUERA ST., STE. 102
SAN LUIS OBISPO, CA 93401

COUNTY OF SAN LUIS OBISPO
DEPARTMENT OF PUBLIC WORKS
1050 MONTEREY STREET
SAN LUIS OBISPO, CA 93408

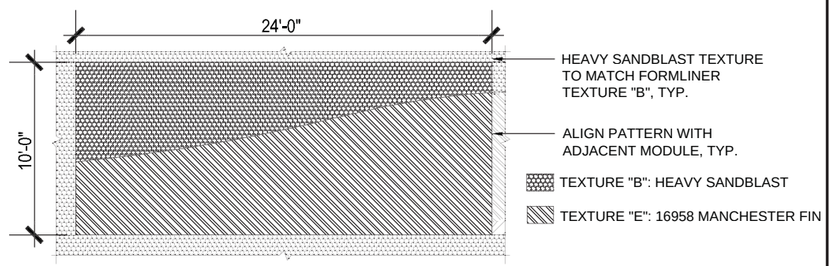

P — MODULE P: ROLLING HILLS - RETAINING WALL FROMLINER PATTERN — 1/4" = 1'-0"

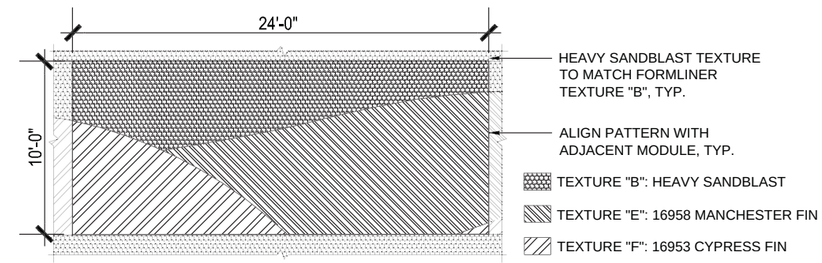

N — MODULE N: ROLLING HILLS - RETAINING WALL FROMLINER PATTERN — 1/4" = 1'-0"

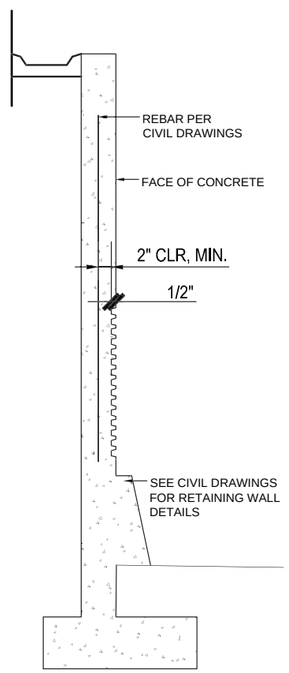

Q — RETAINING WALL FORMLINER, TYPICAL SECTIOIN — 1/2" = 1'-0"

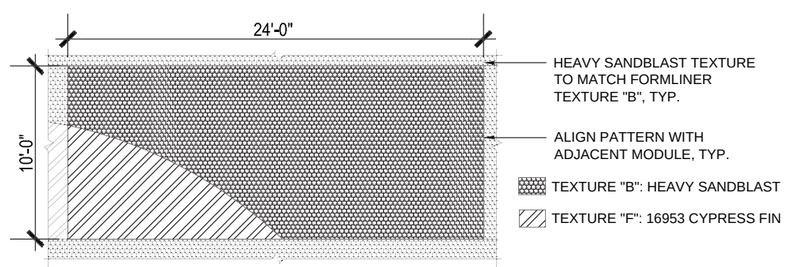

O — MODULE O: ROLLING HILLS - RETAINING WALL FORMLINER PATTERN — 1/4" = 1'-0"

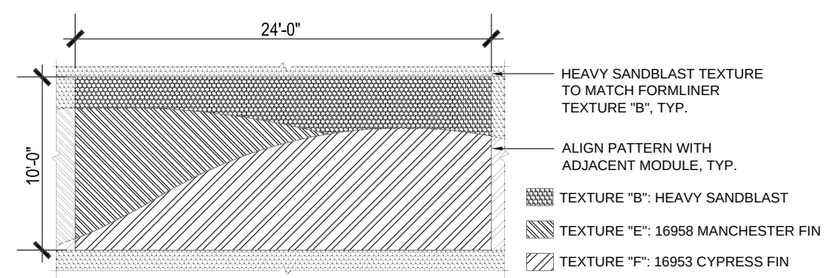

M — MODULE M: ROLLING HILLS - RETAINING WALL FORMLINER PATTERN — 1/4" = 1'-0"

THIS PLAN ACCURATE FOR ART WORK ONLY

DETAILS
A11

REVISED BY	DATE REVISED
LWIERSCHEM	LMCKAY
CALCULATED-DESIGNED BY	CHECKED BY
CONSULTANT FUNCTIONAL SUPERVISOR	RRM DESIGN GROUP

STATE OF CALIFORNIA - DEPARTMENT OF TRANSPORTATION
Caltrans
ART DETAILS

DATE PLOTTED => $DATE
TIME PLOTTED => $TIME
LAST REVISION 05-05-10

BORDER LAST REVISED 4/11/2008 | RELATIVE BORDER SCALE IS IN INCHES 0 1 2 3 | USERNAME => $USER | DGN FILE => $REQUEST | CU | EA 05-474503

Dist	COUNTY	ROUTE	POST MILES TOTAL PROJECT	SHEET No.	TOTAL SHEETS
05	SLO	101	5.9/6.9	261	290

REGISTERED LANDSCAPE ARCHITECT — DATE 07-16-10

PLANS APPROVAL DATE

LICENSED LANDSCAPE ARCHITECT — M. ANTHONY KEITH NO. 3873 — Signature — 10/31/10 Renewal Date — Date — STATE OF CALIFORNIA

THE STATE OF CALIFORNIA OR ITS OFFICERS OR AGENTS SHALL NOT BE RESPONSIBLE FOR THE ACCURACY OR COMPLETENESS OF SCANNED COPIES OF THIS PLAN SHEET.

RRM DESIGN GROUP
3765 S. HIGUERA ST., STE. 102
SAN LUIS OBISPO, CA 93401

COUNTY OF SAN LUIS OBISPO
DEPARTMENT OF PUBLIC WORKS
1050 MONTEREY STREET
SAN LUIS OBISPO, CA 93408

ABBREVIATIONS

AC - ACRE
B&B - BALLED AND BURLAPPED
CY - CUBIC YARD
DIA - DIAMETER
EA - EACH
FT - FOOT
FT² - SQUARE FOOT
FT³ - CUBIC FOOT
G - GRAM
IN - INCH
LB - POUND
MAX - MAXIMUM
MIN - MINIMUM
NO. - NUMBER
PVMT - PAVEMENT
PLT ESTB - PLANT ESTABLISHMENT
REQ - REQUIRED
R/W - RIGHT OF WAY
SF - STATE FURNISHED
TAB - TABLETS
TRVD - TRAVELED

PLANT LIST AND PLANTING SPECIFICATIONS

PLANT GROUP	PLANT NUMBER	SYMBOL	BOTANICAL NAME	COMMON NAME	SIZE	QUANTITY EACH	HOLE SIZE DIA.	HOLE SIZE DEPTH	BASIN TYPE	IRON SULFATE	SOIL AMEND (1)	COMMERCIAL FERTILIZER (1) PLANTING	COMMERCIAL FERTILIZER (1) PLT ESTB	MULCH	STAKING	PLANTING LIMITS MINIMUM DISTANCE (FT) FROM TRVD WAY	PVMT	FENCE	WALL	PAVED DITCH	EARTH DITCH	ON CENTER (FT)	REMARKS
A	1		ARCTOSTAPHYLOS RUDIS	SAND MESA MANZANITA	No. 1	65	(2)	(2)	II	-	(7)	(7)	(7)	2 FT³	-	-	6	6	6	6	6	10	MEDIUM SHRUB
	2		PRUNUS FASCICULATA VAR. PUNCTATA	SAND ALMOND	No. 1	87				-				2 FT³	-	-	6	6	6	6	6	10	MEDIUM SHRUB
	3		RHAMNUS CALIFORNICA	COFFEEBERRY	No. 1	32				-				2 FT³	-	-	15	15	10	10	12	-	MEDIUM SHRUB
B	4		HETEROMELES ARBUTIFOLIA	TOYON	No. 5	24				-				2 FT³	-	-	15	15	10	10	12	-	LARGE SHRUB
	5		QUERCUS AGRIFOLIA	COAST LIVE OAK	No. 5	167				-				4 FT³	(6)	30	-	20	15	15	17	20	STANDARD TREE (11) (12)
	6		SAMBUCUS CAERULEA	BLUE ELDERBERRY	No. 5	12				-				2 FT³	-	-	15	15	15	15	17	-	LARGE SHRUB

APPLICABLE WHEN CIRCLED:

(1) - Quantities shown are "per plant" unless shown as CY application rates.
(2) - Sufficient to recieve root ball
3 - Does not apply to mulch areas.
(4) - As shown on plans
5 - Unless otherwise shown on plans
(6) - Required
(7) - See special provisions
8 - See standard specifications
9 - See detail
10 - Twice the diameter of rootball
(11) - Root protector required
(12) - Foliage protector required

NOTE:

Underlined portions of botanical name indicate abbreviations used on Planting Plans

SEED TYPE 1:
EROSION CONTROL HYDROSEED

SEED TYPE 2:
MARITIME CHAPARRAL ENHANCEMENTS

SEED TYPE 3:
BIOFILTRATION STRIPS

CALIFORNIA SPINEFLOWER

PLANT LIST

PL-1

STATE OF CALIFORNIA - DEPARTMENT OF TRANSPORTATION
Caltrans
LANDSCAPE ARCHITECTURE
CONSULTANT FUNCTIONAL SUPERVISOR
RRM DESIGN GROUP
CALCULATED-DESIGNED BY
CHECKED BY
REVISED BY
DATE REVISED
MPELTIER
LMCKAY

LAST REVISION 07-16-10
DATE PLOTTED => $DATE
TIME PLOTTED => $TIME

Dist	COUNTY	ROUTE	POST MILES TOTAL PROJECT	SHEET No.	TOTAL SHEETS
05	SLO	101	5.9/6.9	262	290

REGISTERED LANDSCAPE ARCHITECT — DATE 07-16-10

PLANS APPROVAL DATE

LICENSED LANDSCAPE ARCHITECT — M. ANTHONY KEITH NO. 3873 — Signature — 10/31/10 Renewal Date — Date — STATE OF CALIFORNIA

THE STATE OF CALIFORNIA OR ITS OFFICERS OR AGENTS SHALL NOT BE RESPONSIBLE FOR THE ACCURACY OR COMPLETENESS OF SCANNED COPIES OF THIS PLAN SHEET.

RRM DESIGN GROUP
3765 S. HIGUERA ST., STE. 102
SAN LUIS OBISPO, CA 93401

COUNTY OF SAN LUIS OBISPO
DEPARTMENT OF PUBLIC WORKS
1050 MONTEREY STREET
SAN LUIS OBISPO, CA 93408

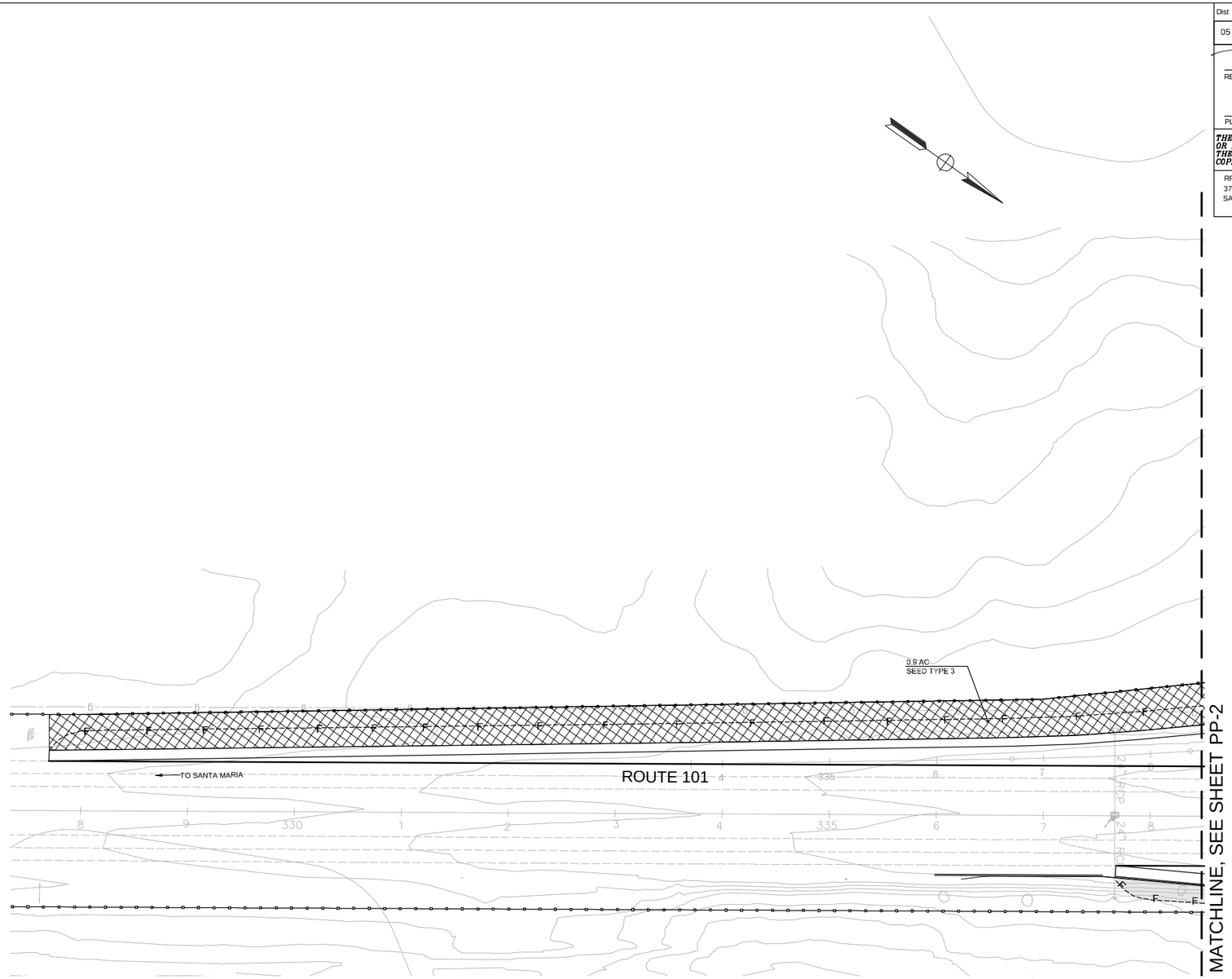

NOTE:

1. INSTALL COMPOST BLANKET ON DISTURBED AREAS PRIOR TO HYDROSEEDING.
2. SEE EROSION CONTROL PLANS FOR MORE INFORMATION IN THIS AREA.

THIS PLAN ACCURATE FOR PLANTING WORK ONLY.

DIGALERT — DIAL TOLL FREE 1-800-227-2600 — AT LEAST TWO DAYS BEFORE YOU DIG — UNDERGROUND SERVICE ALERT (USA) OF NORTHERN CALIFORNIA

PLANTING PLAN

SCALE 1"=50'

PP-1

STATE OF CALIFORNIA - DEPARTMENT OF TRANSPORTATION — Caltrans — LANDSCAPE ARCHITECTURE

CONSULTANT FUNCTIONAL SUPERVISOR: RRM DESIGN GROUP

CALCULATED-DESIGNED BY: MPELTIER — CHECKED BY: LMCKAY — REVISED BY — DATE REVISED

LAST REVISION 07-16-10 — DATE PLOTTED => $DATE — TIME PLOTTED => $TIME

Dist	COUNTY	ROUTE	POST MILES TOTAL PROJECT	SHEET No.	TOTAL SHEETS
05	SLO	101	5.9/6.9	263	290

REGISTERED LANDSCAPE ARCHITECT — DATE 07-16-10

PLANS APPROVAL DATE

LICENSED LANDSCAPE ARCHITECT — M. ANTHONY KEITH NO. 3873 — Signature — 10/31/10 Renewal Date — Date — STATE OF CALIFORNIA

THE STATE OF CALIFORNIA OR ITS OFFICERS OR AGENTS SHALL NOT BE RESPONSIBLE FOR THE ACCURACY OR COMPLETENESS OF SCANNED COPIES OF THIS PLAN SHEET.

RRM DESIGN GROUP
3765 S. HIGUERA ST., STE. 102
SAN LUIS OBISPO, CA 93401

COUNTY OF SAN LUIS OBISPO
DEPARTMENT OF PUBLIC WORKS
1050 MONTEREY STREET
SAN LUIS OBISPO, CA 93408

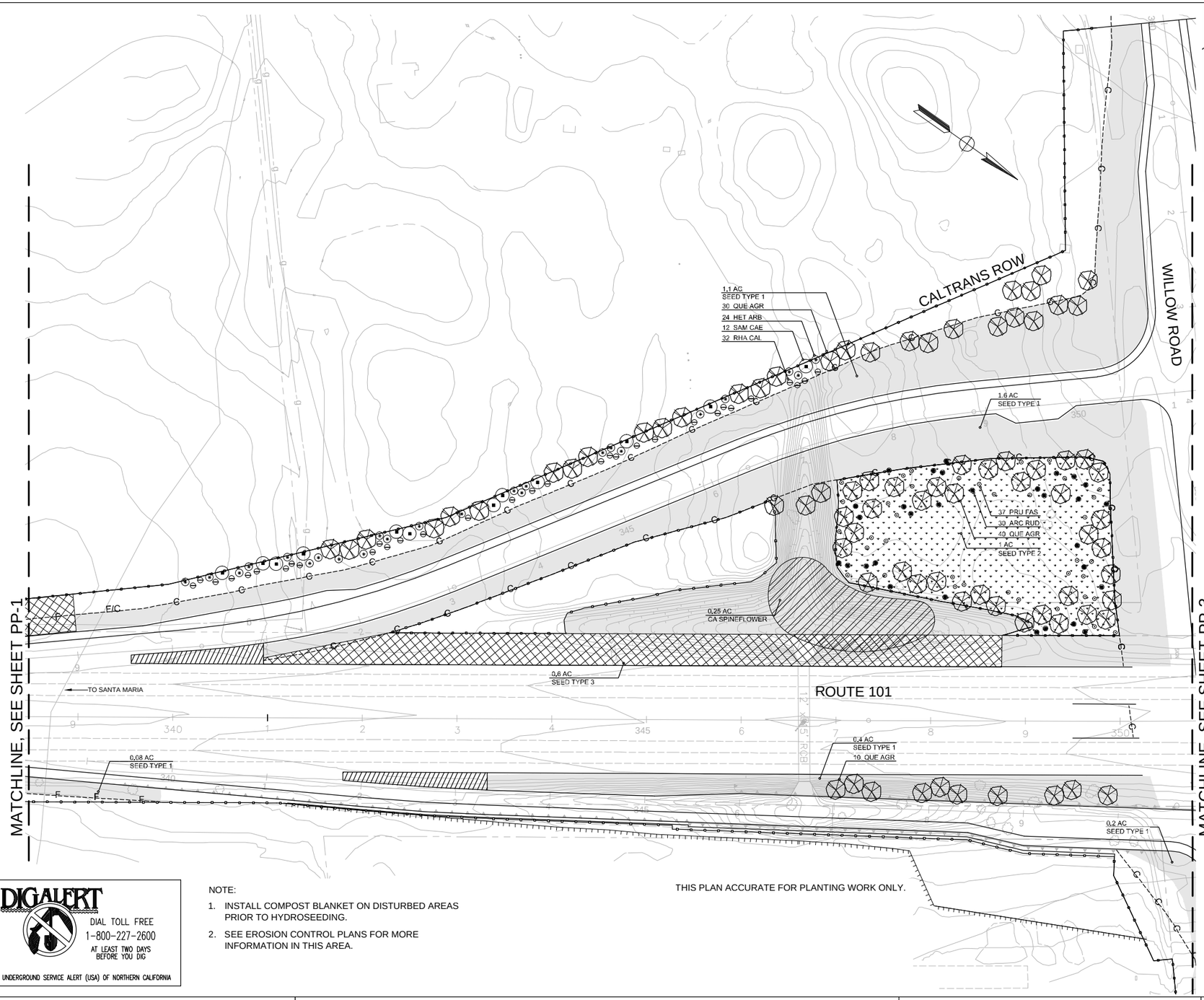

DIGALERT
DIAL TOLL FREE
1-800-227-2600
AT LEAST TWO DAYS BEFORE YOU DIG
UNDERGROUND SERVICE ALERT (USA) OF NORTHERN CALIFORNIA

NOTE:

1. INSTALL COMPOST BLANKET ON DISTURBED AREAS PRIOR TO HYDROSEEDING.
2. SEE EROSION CONTROL PLANS FOR MORE INFORMATION IN THIS AREA.

THIS PLAN ACCURATE FOR PLANTING WORK ONLY.

PLANTING PLAN

SCALE 1"=50'

PP-2

STATE OF CALIFORNIA - DEPARTMENT OF TRANSPORTATION
Caltrans
LANDSCAPE ARCHITECTURE

CONSULTANT FUNCTIONAL SUPERVISOR: RRM DESIGN GROUP

CALCULATED-DESIGNED BY: MPELTIER
CHECKED BY: LMCKAY
REVISED BY
DATE REVISED

LAST REVISION 07-16-10
DATE PLOTTED => $DATE
TIME PLOTTED => $TIME

BORDER LAST REVISED 4/11/2008

RELATIVE BORDER SCALE IS IN INCHES 0 1 2 3

USERNAME => $USER
DGN FILE => $REQUEST

CU

EA 05-474503

Dist	COUNTY	ROUTE	POST MILES TOTAL PROJECT	SHEET No.	TOTAL SHEETS
05	SLO	101	5.9/6.9	264	290

REGISTERED LANDSCAPE ARCHITECT — DATE 07-16-10

PLANS APPROVAL DATE

LICENSED LANDSCAPE ARCHITECT — M. ANTHONY KEITH NO. 3873 — Signature — 10/31/10 Renewal Date — Date — STATE OF CALIFORNIA

THE STATE OF CALIFORNIA OR ITS OFFICERS OR AGENTS SHALL NOT BE RESPONSIBLE FOR THE ACCURACY OR COMPLETENESS OF SCANNED COPIES OF THIS PLAN SHEET.

RRM DESIGN GROUP
3765 S. HIGUERA ST., STE. 102
SAN LUIS OBISPO, CA 93401

COUNTY OF SAN LUIS OBISPO
DEPARTMENT OF PUBLIC WORKS
1050 MONTEREY STREET
SAN LUIS OBISPO, CA 93408

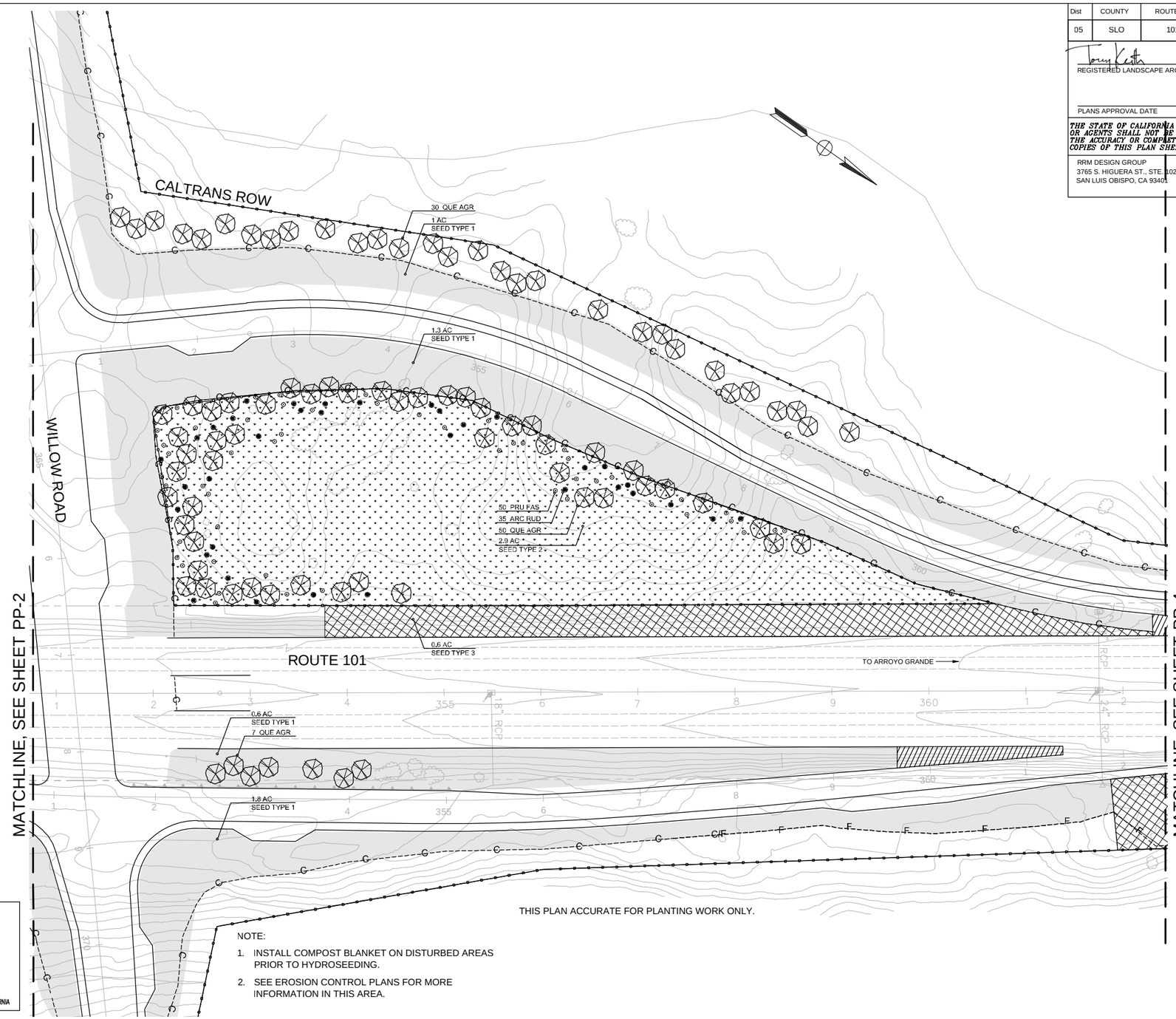

THIS PLAN ACCURATE FOR PLANTING WORK ONLY.

NOTE:

1. INSTALL COMPOST BLANKET ON DISTURBED AREAS PRIOR TO HYDROSEEDING.
2. SEE EROSION CONTROL PLANS FOR MORE INFORMATION IN THIS AREA.

DIGALERT
DIAL TOLL FREE
1-800-227-2600
AT LEAST TWO DAYS BEFORE YOU DIG
UNDERGROUND SERVICE ALERT (USA) OF NORTHERN CALIFORNIA

PLANTING PLAN

SCALE 1"=50'

PP-3

STATE OF CALIFORNIA - DEPARTMENT OF TRANSPORTATION
Caltrans
LANDSCAPE ARCHITECTURE

CONSULTANT FUNCTIONAL SUPERVISOR: RRM DESIGN GROUP
CALCULATED-DESIGNED BY: MPELTIER
CHECKED BY: LMCKAY
REVISED BY
DATE REVISED

LAST REVISION 07-16-10
DATE PLOTTED => $DATE
TIME PLOTTED => $TIME

BORDER LAST REVISED 4/11/2008
RELATIVE BORDER SCALE IS IN INCHES 0 1 2 3
USERNAME => $USER
DGN FILE => $REQUEST
CU
EA 05-474503

Dist	COUNTY	ROUTE	POST MILES TOTAL PROJECT	SHEET No.	TOTAL SHEETS
05	SLO	101	5.9/6.9	265	290

REGISTERED LANDSCAPE ARCHITECT — DATE 07-16-10

PLANS APPROVAL DATE

LICENSED LANDSCAPE ARCHITECT — M. ANTHONY KEITH NO. 3873 — Signature — 10/31/10 Renewal Date — Date — STATE OF CALIFORNIA

THE STATE OF CALIFORNIA OR ITS OFFICERS OR AGENTS SHALL NOT BE RESPONSIBLE FOR THE ACCURACY OR COMPLETENESS OF SCANNED COPIES OF THIS PLAN SHEET.

RRM DESIGN GROUP
3765 S. HIGUERA ST., STE. 102
SAN LUIS OBISPO, CA 93401

COUNTY OF SAN LUIS OBISPO
DEPARTMENT OF PUBLIC WORKS
1050 MONTEREY STREET
SAN LUIS OBISPO, CA 93408

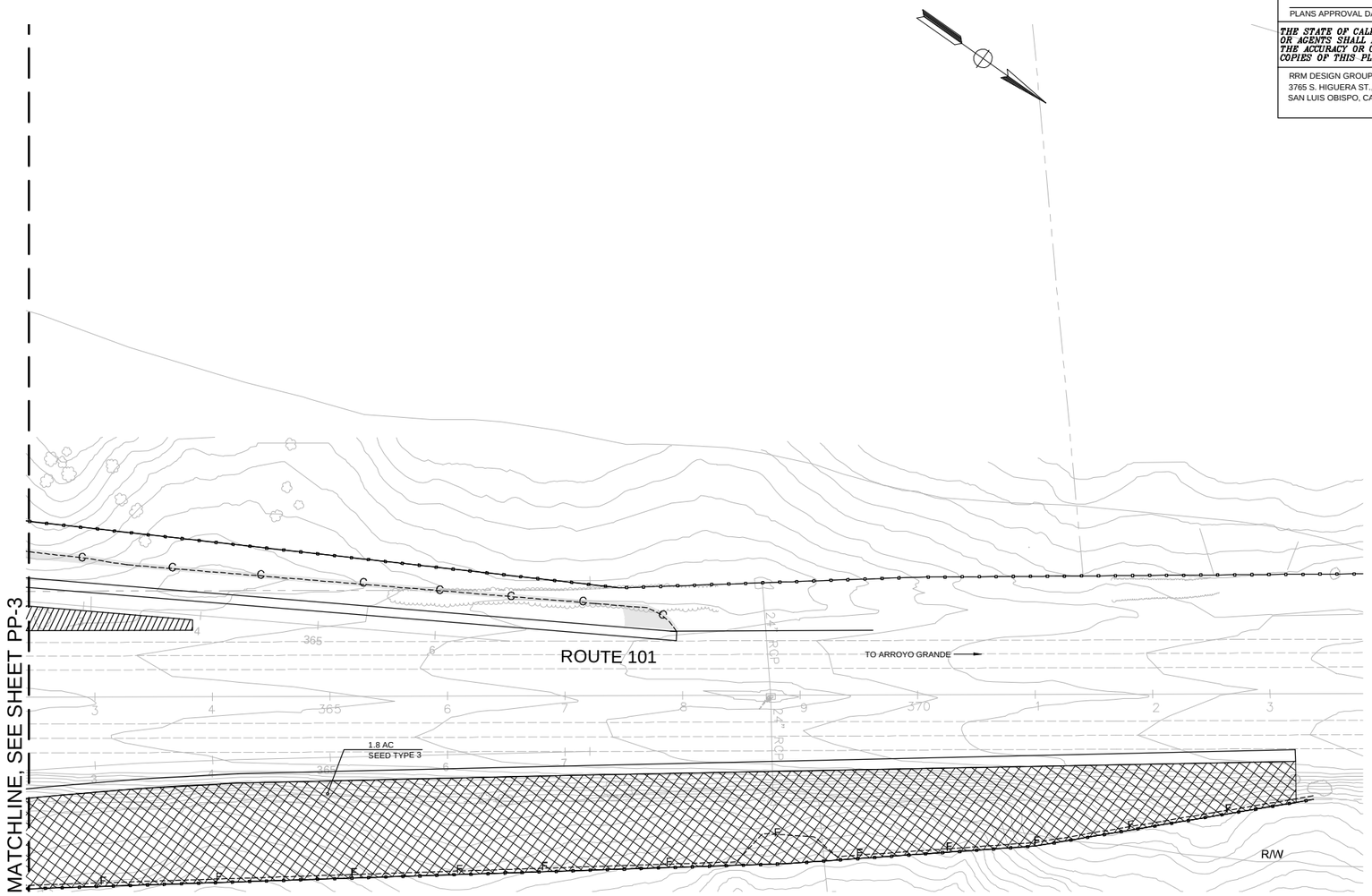

NOTE:

1. INSTALL COMPOST BLANKET ON DISTURBED AREAS PRIOR TO HYDROSEEDING.
2. SEE EROSION CONTROL PLANS FOR MORE INFORMATION IN THIS AREA.

THIS PLAN ACCURATE FOR PLANTING WORK ONLY.

DIGALERT
DIAL TOLL FREE
1-800-227-2600
AT LEAST TWO DAYS BEFORE YOU DIG
UNDERGROUND SERVICE ALERT (USA) OF NORTHERN CALIFORNIA

PLANTING PLAN

SCALE 1"=50'

PP-4

STATE OF CALIFORNIA - DEPARTMENT OF TRANSPORTATION
LANDSCAPE ARCHITECTURE
CONSULTANT FUNCTIONAL SUPERVISOR: RRM DESIGN GROUP
CALCULATED-DESIGNED BY: MPELTIER
CHECKED BY: LMCKAY
REVISED BY
DATE REVISED

LAST REVISION 07-16-10
DATE PLOTTED => $DATE
TIME PLOTTED => $TIME

BORDER LAST REVISED 4/11/2008
RELATIVE BORDER SCALE IS IN INCHES 0 1 2 3
USERNAME => $USER
DGN FILE => $REQUEST
CU
EA 05-474503

Dist	COUNTY	ROUTE	POST MILES TOTAL PROJECT	SHEET No.	TOTAL SHEETS
05	SLO	101	5.9/6.9	266	290

REGISTERED LANDSCAPE ARCHITECT — DATE 07-16-10

PLANS APPROVAL DATE

LICENSED LANDSCAPE ARCHITECT — M. ANTHONY KEITH No. 3873 — Signature — Expiration Date 10/31/10 — Date — STATE OF CALIFORNIA

THE STATE OF CALIFORNIA OR ITS OFFICERS OR AGENTS SHALL NOT BE RESPONSIBLE FOR THE ACCURACY OR COMPLETENESS OF SCANNED COPIES OF THIS PLAN SHEET.

RRM DESIGN GROUP
3765 S. HIGUERA ST., STE. 102
SAN LUIS OBISPO, CA 93401

COUNTY OF SAN LUIS OBISPO
DEPARTMENT OF PUBLIC WORKS
1050 MONTEREY STREET
SAN LUIS OBISPO, CA 93408

APPLICABLE WHEN CIRCLED BELOW:

1 - See Special Provisions.
2 - If a pressure compensating device is specified, the discharge and radii shown reflect its use.
3 - Arc Stop shall be fitted with a nut and bolt.
4 - Vinyl-coated cast iron housing.
5 - Swing Joints required adjacent to shoulders, curbs, sidewalks, and dikes.
6 - Unless otherwise shown on plans.
7 - Length as required to reach 2" above finish grade

ABBREVIATIONS

ADJ — adjustable
B/B — brass/bronze
B/B/PL — brass/bronze/plastic
B/PL — brass/plastic
BPAE — backflow preventor & enclosure
BV — ball valve
CST — center strip
DN — diameter nominal
EST — end strip
F — full circle
FT — feet
F/P — full/part circle
G/H — gallons per hour
G/M — gallons per minute
G/S — gallons per second
GV — gate valve
H — half circle
IN — inches
IPS — iron pipe size
NPT — national pipe thread
P — part circle
PL — plastic
Q — quarter circle
QC — quick coupler
RCV — remote control valve
MRCV — master remote control valve
SST — side strip
T — third circle
TQ — three quarter circle
TT — two thirds circle
WM — water meter

IRRIGATION NOTES

1. IRRIGATION PLAN IS DIAGRAMMATIC. FINAL LOCATION OF PIPING WILL BE DETERMINED AT THE TIME OF INSTALLATION. MAINLINE AND LATERALS SHALL BE PLACED IN THE SAME TRENCH WHEN POSSIBLE. ALL VALVES ARE TO BE LOCATED 12" FROM SIDEWALKS, CURBS, ASPHALT & CONCRETE SURFACES.
2. ALL EQUIPMENT REQUIRED BUT NOT SPECIFIED ON THE DRAWING, TO COMPLETE THE WORK, SHALL BE PROVIDED BY THE IRRIGATION CONTRACTOR.
3. INSTALL ALL EQUIPMENT IN ACCORDANCE WITH MANUFACTURER'S INSTRUCTIONS AND/OR SPECIFICATIONS.
4. CONTRACTOR SHALL FAMILIARIZE HIMSELF WITH THE PLANS AND SITE CONDITIONS PRIOR TO BEGINNING WORK. SHOULD CONFLICTING INFORMATION BE FOUND ON THE PLANS, THE CONTRACTOR SHALL NOTIFY THE PROJECT LANDSCAPE ARCHITECT BEFORE PROCEEDING WITH THE WORK IN QUESTION.
5. DO NOT WILLFULLY INSTALL THE IRRIGATION SYSTEM AS SHOWN ON THE DRAWINGS WHEN IT IS OBVIOUS IN THE FIELD THAT OBSTRUCTIONS, GRADE DIFFERENCES OR DIFFERENCES IN THE AREA DIMENSIONS EXIST THAT MIGHT NOT HAVE BEEN CONSIDERED IN THE ENGINEERING. SUCH OBSTRUCTIONS OR DIFFERENCES SHOULD BE BROUGHT TO THE ATTENTION OF THE LANDSCAPE ARCHITECT. IN THE EVENT THIS NOTIFICATION IS NOT PERFORMED, THE CONTRACTOR SHALL ASSUME FULL RESPONSIBILITY FOR ANY REVISIONS NECESSARY AT NO EXPENSE TO THE COUNTY.
6. CONTRACTOR SHALL BE RESPONSIBLE FOR THE INSTALLATION OF ALL MATERIAL APPEARING ON PLAN.
7. ALL EXISTING UTILITIES, WATER LINES AND FIRE HYDRANTS SHALL REMAIN CONNECTED AND IN FULL CONTINUOUS OPERATION DURING AND FOLLOWING ALL CONTRACT WORK.

IRRIGATION EQUIPMENT SCHEDULE

SYMBOL	MANUFACTURER	MODEL	DESCRIPTION	REMARKS
◉	ANDREWS	150-A-BR/150-DC-BR	CAM COUPLER ASSEMBLY 1 1/2" MALE ADAPTER X FEMALE NPT (BRASS) WITH 1 1/2" DUST CAP (BRASS)	SEE CALTRANS STD. DETAIL
	KBI	BTU SERIES	TRUE UNION BALL VALVE	SEE CALTRANS STD. DETAIL
	CHRISTY	B24	CONCRETE VALVE BOX WITH STEEL LID	SEE CALTRANS STD. DETAIL
⋈	WILKINS	500 SERIES	PRESSURE REGULATING VALVE	SEE CALTRANS STD. DETAIL
⊟	AS APPROVED		FILTER ASSEMBLY UNIT	SEE CALTRANS STD. DETAIL
———	AS APPROVED	SCH. 40 PVC	LATERAL PIPE	SEE CALTRANS STD. DETAIL
~~	AS APPROVED	1/2"	LATERAL DRIP LINE	SEE CALTRANS STD. DETAIL
—·—·—	AS APPROVED	GALVANIZED STEEL PIPE	LATERAL PIPE	SEE CALTRANS STD. DETAIL

SPRINKLER SCHEDULE

SYMBOL	TYPE	MANUFACTURER	MODEL	DESCRIPTION	SPRAY PATTERN	OPERATING PRESSURE (PSI)	PRESSURE COMPENSATING	PLUS / MINUS 5% ② DISCHARGE: GALLONS PER SECOND (GPS)	GALLONS PER MINUTE (GPM)	GALLONS PER HOUR (GPH)	RADIUS (FT)	WIDTH x LENGTH (IN FEET)(FT)	MATERIAL	NOZZLE TYPE	NOZZLE SIZE IN INCHES (IN)	INLET CONNECTION (NPT) (IN INCHES)(IN)	ADJ ARC STOP POSITIVE-LOCKING	BACKSPLASH PREVENTER	DIFFUSER PIN	DISTANCE CONTROL FLAP	ADJ DISCHARGE	RISER: TYPE	MATERIAL: PLASTIC	MATERIAL: GALVANIZED	SIZE (IN INCHES)(IN)	HEIGHT (IN INCHES)(IN)	FLOW SHUTOFF DEVICE	SWING JOINT (TYPE)	RISER SUPPORT	SPRINKLER PROTECTOR (TYPE)	REMARKS
●	C-1	RAINBIRD	FIXED RISER	BUBBLER	-	30	X	-	0.5	-	-	-	PL	1402	-	0.5	-	-	-	-	X	V	X	-	0.5	-	-	-	-	-	SEE CALTRANS STD. DETAIL
	D-1	RAINBIRD	XERI-BUG	DRIP EMITTER	-	15-50	X	-	0.5	-	-	-	PL	-	-	-	-	-	-	-	-	-	-	-	-	-	-	-	-	-	2 EMITTERS PER SHRUB. INSTALL EMITTERS ON UPHILL SIDE OF PLANT WITHIN PLANTING BASIN.

X IN BOX DENOTES REQUIREMENT

IRRIGATION LEGEND AND NOTES

IP-1

STATE OF CALIFORNIA - DEPARTMENT OF TRANSPORTATION
LANDSCAPE ARCHITECTURE
CONSULTANT FUNCTIONAL SUPERVISOR: RRM DESIGN GROUP
CALCULATED-DESIGNED BY / CHECKED BY
MPELTIER / LMCKAY
REVISED BY / DATE REVISED

LAST REVISION 07-16-10
DATE PLOTTED => $DATE
TIME PLOTTED => $TIME

Dist	COUNTY	ROUTE	POST MILES TOTAL PROJECT	SHEET No.	TOTAL SHEETS
05	SLO	101	5.9/6.9	267	290

REGISTERED LANDSCAPE ARCHITECT — DATE 07-16-10

PLANS APPROVAL DATE

LICENSED LANDSCAPE ARCHITECT — M. ANTHONY KEITH NO. 3873 — Signature — 10/31/10 Renewal Date — Date — STATE OF CALIFORNIA

THE STATE OF CALIFORNIA OR ITS OFFICERS OR AGENTS SHALL NOT BE RESPONSIBLE FOR THE ACCURACY OR COMPLETENESS OF SCANNED COPIES OF THIS PLAN SHEET.

RRM DESIGN GROUP
3765 S. HIGUERA ST., STE. 102
SAN LUIS OBISPO, CA 93401

COUNTY OF SAN LUIS OBISPO
DEPARTMENT OF PUBLIC WORKS
1050 MONTEREY STREET
SAN LUIS OBISPO, CA 93408

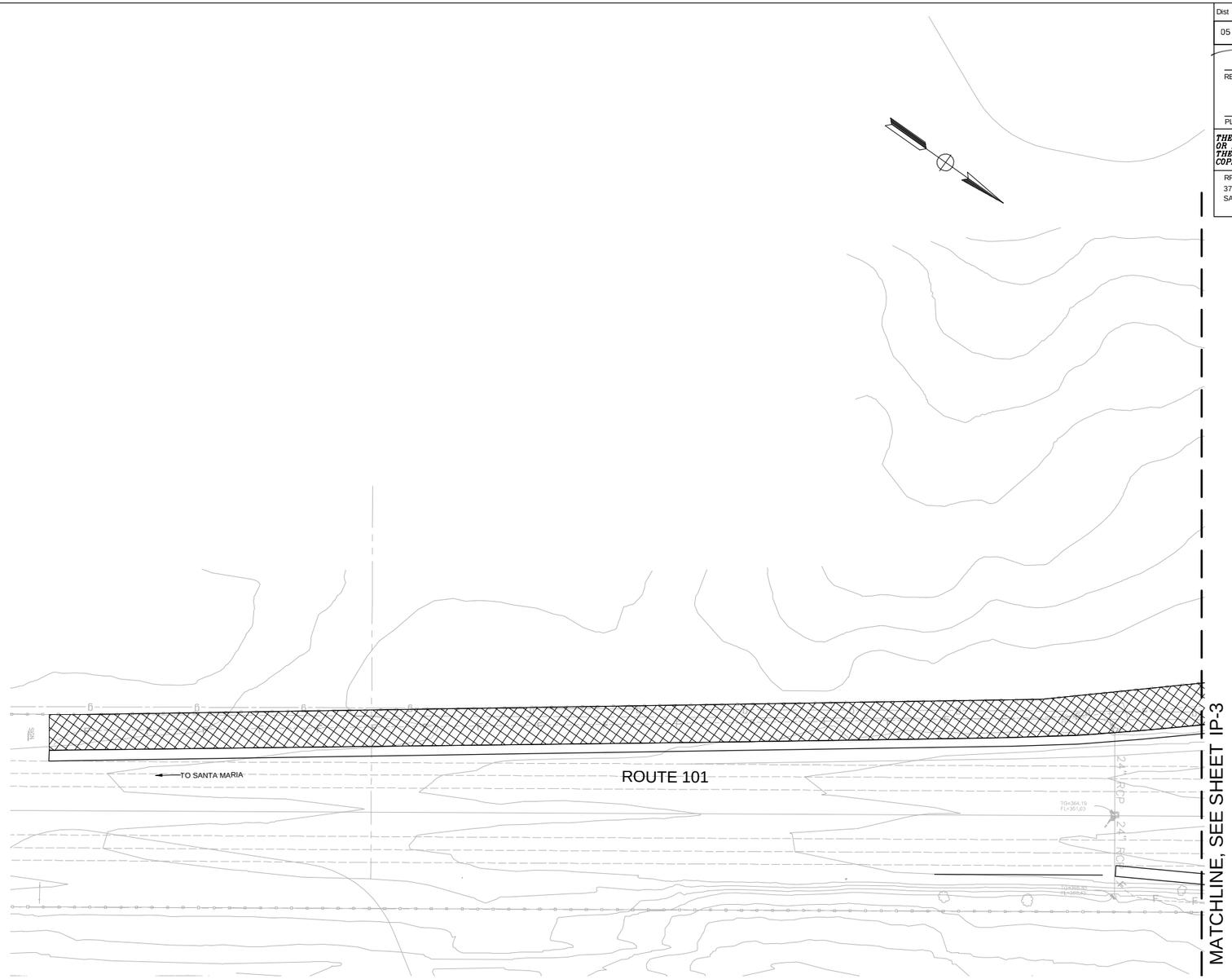

NOTE:

1. ALL IRRIGATION EQUIPMENT SIZES ARE SHOWN IN INCHES (DIAMETER NOMINAL) UNLESS OTHERWISE NOTED.
2. UNLESS OTHERWISE NOTED, ALL LATERAL LINES SHALL BE $\frac{3}{4}$" MINIMUM.

THIS PLAN ACCURATE FOR IRRIGATION WORK ONLY.

DIGALERT
DIAL TOLL FREE
1-800-227-2600
AT LEAST TWO DAYS BEFORE YOU DIG
UNDERGROUND SERVICE ALERT (USA) OF NORTHERN CALIFORNIA

IRRIGATION PLAN

SCALE 1"=50'

IP-2

STATE OF CALIFORNIA - DEPARTMENT OF TRANSPORTATION
LANDSCAPE ARCHITECTURE

CONSULTANT FUNCTIONAL SUPERVISOR: RRM DESIGN GROUP

CALCULATED-DESIGNED BY: MPELTIER
CHECKED BY: LMCKAY

REVISED BY
DATE REVISED

LAST REVISION 07-16-10
DATE PLOTTED => $DATE
TIME PLOTTED => $TIME

Dist	COUNTY	ROUTE	POST MILES TOTAL PROJECT	SHEET No.	TOTAL SHEETS
05	SLO	101	5.9/6.9	268	290

REGISTERED LANDSCAPE ARCHITECT — DATE 07-16-10

PLANS APPROVAL DATE

LICENSED LANDSCAPE ARCHITECT — M. ANTHONY KEITH NO. 3873 — Signature — Expiration Date 10/31/10 — Date — STATE OF CALIFORNIA

THE STATE OF CALIFORNIA OR ITS OFFICERS OR AGENTS SHALL NOT BE RESPONSIBLE FOR THE ACCURACY OR COMPLETENESS OF SCANNED COPIES OF THIS PLAN SHEET.

RRM DESIGN GROUP
3765 S. HIGUERA ST., STE. 102
SAN LUIS OBISPO, CA 93401

COUNTY OF SAN LUIS OBISPO
DEPARTMENT OF PUBLIC WORKS
1050 MONTEREY STREET
SAN LUIS OBISPO, CA 93408

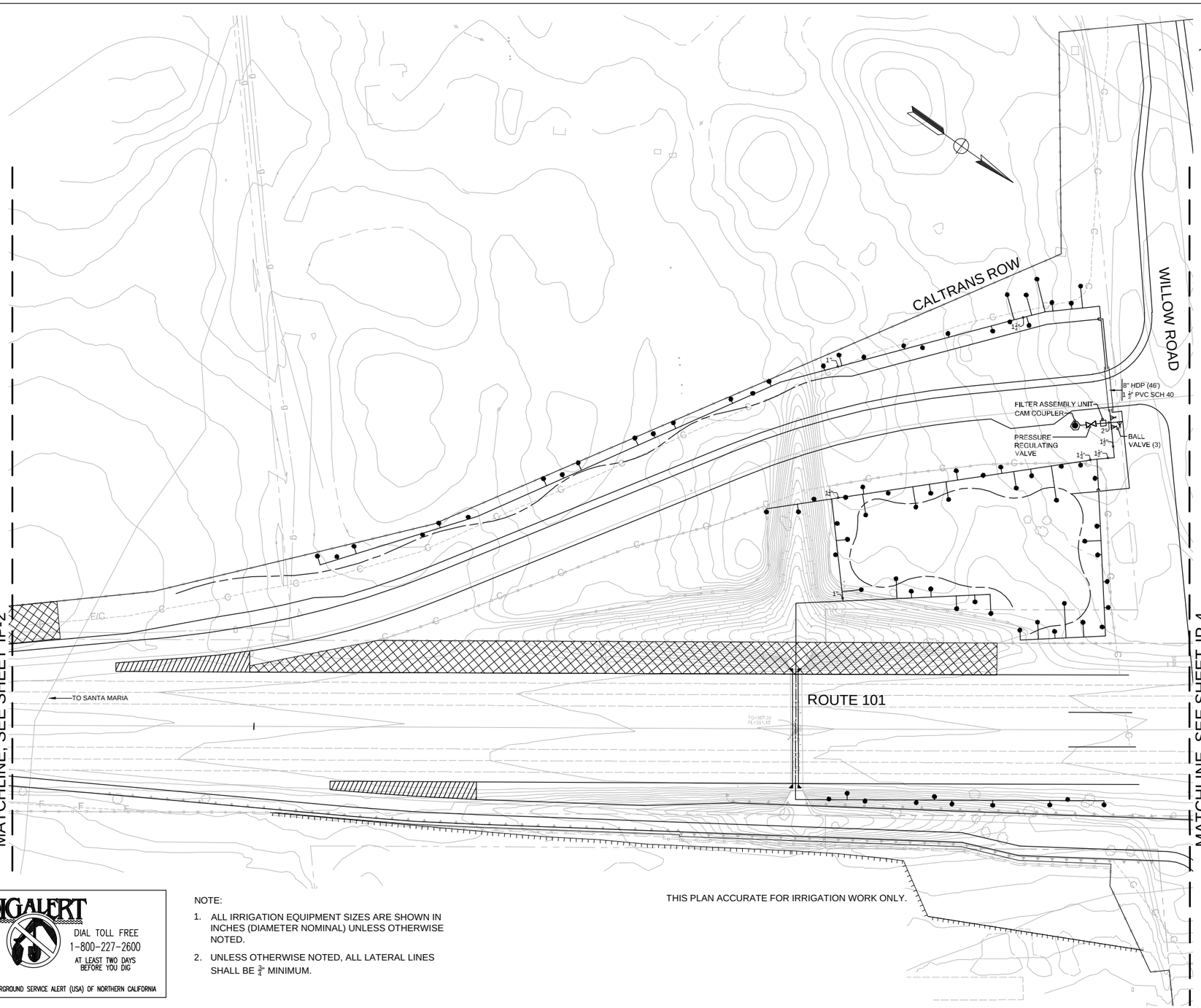

NOTE:

1. ALL IRRIGATION EQUIPMENT SIZES ARE SHOWN IN INCHES (DIAMETER NOMINAL) UNLESS OTHERWISE NOTED.
2. UNLESS OTHERWISE NOTED, ALL LATERAL LINES SHALL BE $\frac{3}{4}$" MINIMUM.

THIS PLAN ACCURATE FOR IRRIGATION WORK ONLY.

DIGALERT
DIAL TOLL FREE
1-800-227-2600
AT LEAST TWO DAYS BEFORE YOU DIG
UNDERGROUND SERVICE ALERT (USA) OF NORTHERN CALIFORNIA

IRRIGATION PLAN

SCALE 1"=50'

IP-3

STATE OF CALIFORNIA - DEPARTMENT OF TRANSPORTATION
Caltrans
LANDSCAPE ARCHITECTURE

CONSULTANT FUNCTIONAL SUPERVISOR: RRM DESIGN GROUP

CALCULATED-DESIGNED BY: MPELTIER
CHECKED BY: LMCKAY
REVISED BY
DATE REVISED

LAST REVISION 07-16-10
DATE PLOTTED => $DATE
TIME PLOTTED => $TIME

BORDER LAST REVISED 4/11/2008

RELATIVE BORDER SCALE IS IN INCHES 0 1 2 3

USERNAME => $USER
DGN FILE => $REQUEST

CU

EA 05-474503

Dist	COUNTY	ROUTE	POST MILES TOTAL PROJECT	SHEET No.	TOTAL SHEETS
05	SLO	101	5.9/6.9	269	290

Tony Keith
REGISTERED LANDSCAPE ARCHITECT — 07-16-10 DATE

PLANS APPROVAL DATE

LICENSED LANDSCAPE ARCHITECT — M. ANTHONY KEITH NO. 3873 — Signature — 10/31/10 Renewal Date — Date — STATE OF CALIFORNIA

THE STATE OF CALIFORNIA OR ITS OFFICERS OR AGENTS SHALL NOT BE RESPONSIBLE FOR THE ACCURACY OR COMPLETENESS OF SCANNED COPIES OF THIS PLAN SHEET.

RRM DESIGN GROUP
3765 S. HIGUERA ST., STE 102
SAN LUIS OBISPO, CA 93401

COUNTY OF SAN LUIS OBISPO
DEPARTMENT OF PUBLIC WORKS
1050 MONTEREY STREET
SAN LUIS OBISPO, CA 93408

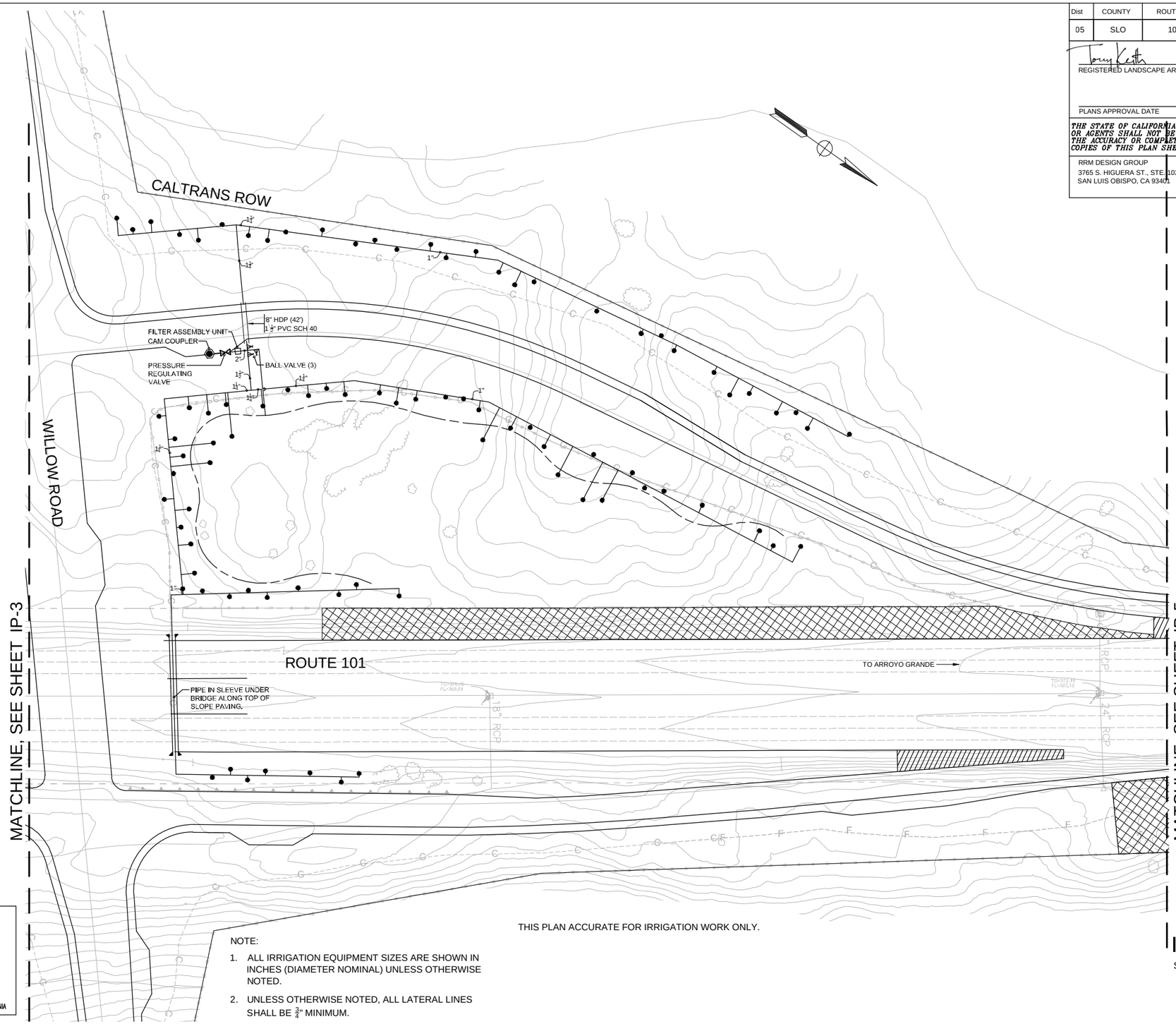

THIS PLAN ACCURATE FOR IRRIGATION WORK ONLY.

NOTE:

1. ALL IRRIGATION EQUIPMENT SIZES ARE SHOWN IN INCHES (DIAMETER NOMINAL) UNLESS OTHERWISE NOTED.
2. UNLESS OTHERWISE NOTED, ALL LATERAL LINES SHALL BE $\frac{3}{4}$" MINIMUM.

DIGALERT
DIAL TOLL FREE
1-800-227-2600
AT LEAST TWO DAYS BEFORE YOU DIG
UNDERGROUND SERVICE ALERT (USA) OF NORTHERN CALIFORNIA

IRRIGATION PLAN

SCALE 1"=50'

IP-4

REVISED BY	MPELTIER
DATE REVISED	LMCKAY
CALCULATED-DESIGNED BY	
CHECKED BY	
CONSULTANT FUNCTIONAL SUPERVISOR	RRM DESIGN GROUP

STATE OF CALIFORNIA - DEPARTMENT OF TRANSPORTATION
Caltrans
LANDSCAPE ARCHITECTURE

DATE PLOTTED => $DATE
TIME PLOTTED => $TIME
LAST REVISION 07-16-10

BORDER LAST REVISED 4/11/2008

RELATIVE BORDER SCALE IS IN INCHES 0 1 2 3

USERNAME => $USER
DGN FILE => $REQUEST

CU

EA 05-474503

Dist	COUNTY	ROUTE	POST MILES TOTAL PROJECT	SHEET No.	TOTAL SHEETS
05	SLO	101	5.9/6.9	270	290

Tony Keith
REGISTERED LANDSCAPE ARCHITECT

07-16-10
DATE

LICENSED LANDSCAPE ARCHITECT
M. ANTHONY KEITH NO. 5873
Expiration
10/31/10
Renewal Date
Date
STATE OF CALIFORNIA

PLANS APPROVAL DATE

THE STATE OF CALIFORNIA OR ITS OFFICERS OR AGENTS SHALL NOT BE RESPONSIBLE FOR THE ACCURACY OR COMPLETENESS OF SCANNED COPIES OF THIS PLAN SHEET.

RRM DESIGN GROUP
3765 S. HIGUERA ST., STE. 102
SAN LUIS OBISPO, CA 93401

COUNTY OF SAN LUIS OBISPO
DEPARTMENT OF PUBLIC WORKS
1050 MONTEREY STREET
SAN LUIS OBISPO, CA 93408

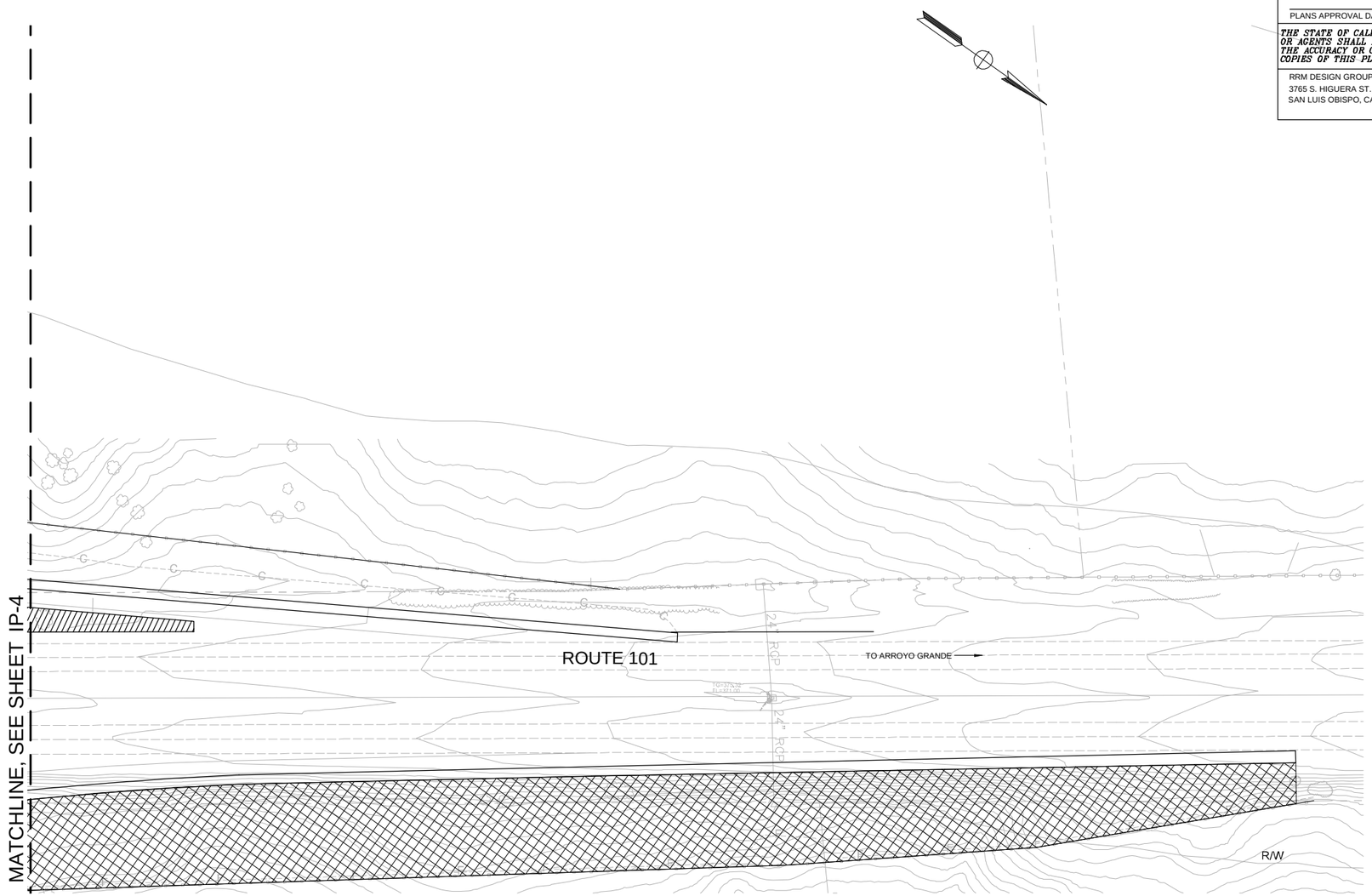

THIS PLAN ACCURATE FOR IRRIGATION WORK ONLY.

DIGALERT
DIAL TOLL FREE
1-800-227-2600
AT LEAST TWO DAYS BEFORE YOU DIG
UNDERGROUND SERVICE ALERT (USA) OF NORTHERN CALIFORNIA

NOTE:

1. ALL IRRIGATION EQUIPMENT SIZES ARE SHOWN IN INCHES (DIAMETER NOMINAL) UNLESS OTHERWISE NOTED.
2. UNLESS OTHERWISE NOTED, ALL LATERAL LINES SHALL BE $\frac{3}{4}$" MINIMUM.

IRRIGATION PLAN

SCALE 1"=50'

IP-5

STATE OF CALIFORNIA - DEPARTMENT OF TRANSPORTATION
Caltrans
LANDSCAPE ARCHITECTURE

CONSULTANT FUNCTIONAL SUPERVISOR
RRM DESIGN GROUP

CALCULATED-DESIGNED BY
CHECKED BY

REVISED BY
DATE REVISED

MPELTIER
LMCKAY

LAST REVISION 07-16-10
DATE PLOTTED => $DATE
TIME PLOTTED => $TIME

Dist	COUNTY	ROUTE	POST MILES TOTAL PROJECT	SHEET No.	TOTAL SHEETS
05	SLO	101	5.9/6.9	271	290

REGISTERED CIVIL ENGINEER — DATE 05/05/10

PLANS APPROVAL DATE

REGISTERED PROFESSIONAL ENGINEER — Bo Gao — No. C59985 — Exp. 6/30/10 — CIVIL — STATE OF CALIFORNIA

THE STATE OF CALIFORNIA OR ITS OFFICERS OR AGENTS OR COUNTY SHALL NOT BE RESPONSIBLE FOR THE ACCURACY OR COMPLETENESS OF SCANNED COPIES OF THIS PLAN SHEET.

RAJAPPAN & MEYER
CONSULTING ENGINEERS INC .
1038 LEIGH AVE . SUITE 100
SAN JOSE , CA 95126

COUNTY OF SAN LUIS OBISPO
DEPARTMENT OF PUBLIC WORKS
1050 MONTEREY STREET
SAN LUIS OBISPO, CA 93408

LEGEND:

- (No.) TREE TO BE REMOVE
- [No.] TREE TO BE TRIM
- △No. TREE TO REMAIN

NOTES:

1. FOR ACCURATE RIGHT OF WAY AND ACCESS DATA, CONTACT RIGHT OF WAY ENGINEERING AT THE DISTRICT OFFICE.

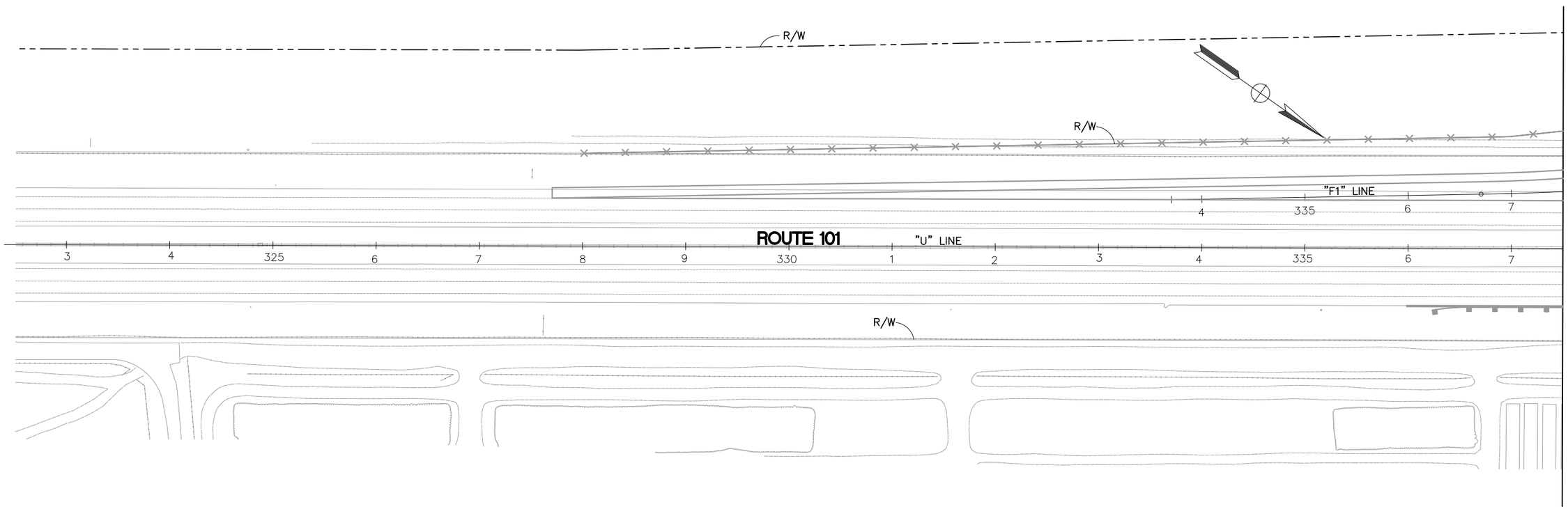

THIS PLAN ACCURATE FOR TREE REMOVAL WORK ONLY.

TREE REMOVAL PLAN

SCALE 1" = 50'

TR-1

REVISED BY	DATE REVISED
T.T., D.L., D.S.	B.G.
CALCULATED-DESIGNED BY	CHECKED BY
CONSULTANT FUNCTIONAL SUPERVISOR	K.G.M.

STATE OF CALIFORNIA - DEPARTMENT OF TRANSPORTATION

LAST REVISION 05-05-10 — DATE PLOTTED => $DATE — TIME PLOTTED => $TIME

Dist	COUNTY	ROUTE	POST MILES TOTAL PROJECT	SHEET No.	TOTAL SHEETS
05	SLO	101	5.9/6.9	272	290

REGISTERED CIVIL ENGINEER — DATE 07/16/10

PLANS APPROVAL DATE

REGISTERED PROFESSIONAL ENGINEER — Bo Gao — No. C59985 — Exp. 6/30/12 — CIVIL — STATE OF CALIFORNIA

THE STATE OF CALIFORNIA OR ITS OFFICERS OR AGENTS OR COUNTY SHALL NOT BE RESPONSIBLE FOR THE ACCURACY OR COMPLETENESS OF SCANNED COPIES OF THIS PLAN SHEET.

RAJAPPAN & MEYER
CONSULTING ENGINEERS INC .
1038 LEIGH AVE . SUITE 100
SAN JOSE , CA 95126

COUNTY OF SAN LUIS OBISPO
DEPARTMENT OF PUBLIC WORKS
1050 MONTEREY STREET
SAN LUIS OBISPO, CA 93408

FOR NOTES, ABBREVIATIONS, AND LEGEND, SEE SHEET TR-1.

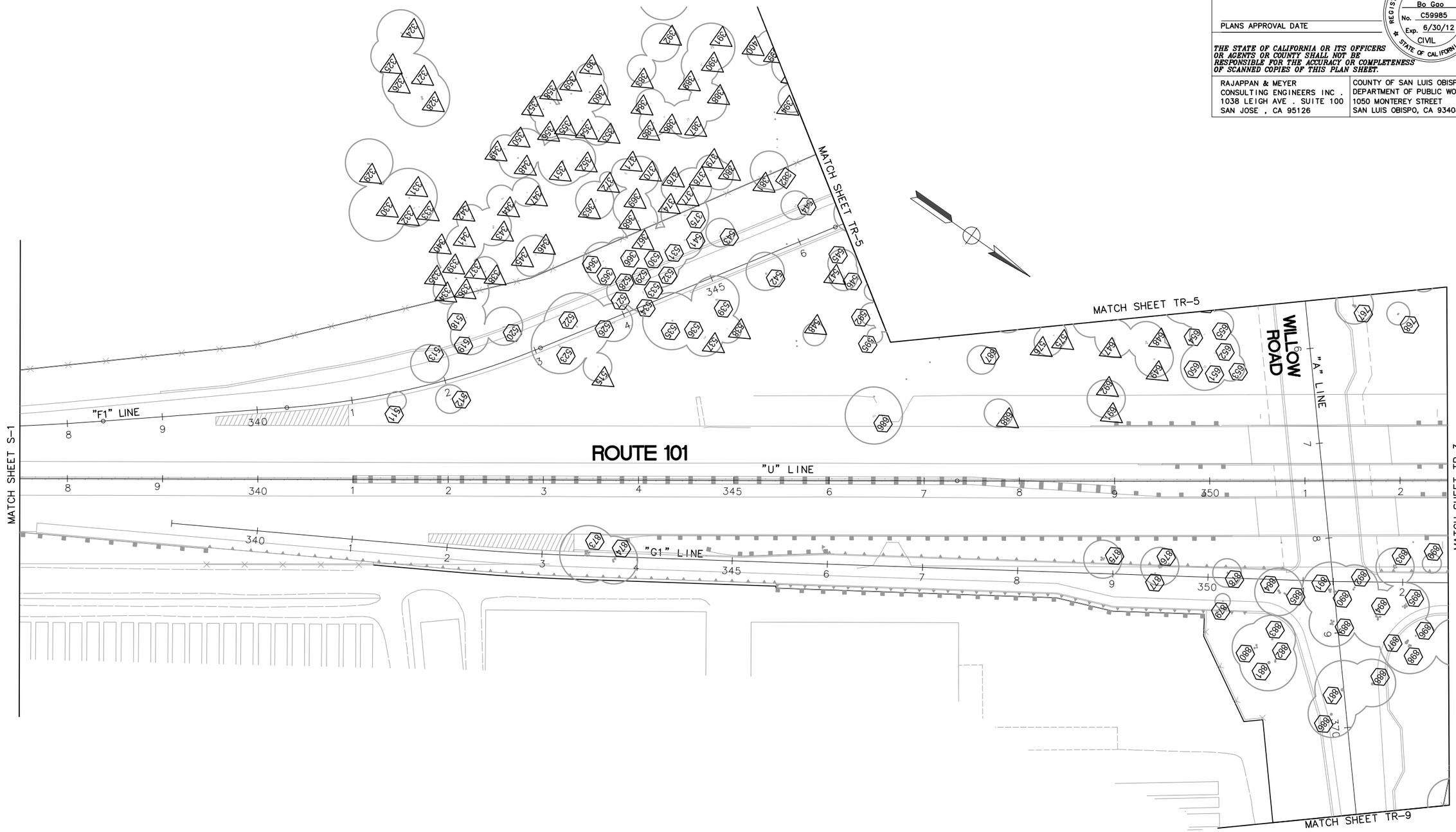

THIS PLAN ACCURATE FOR TREE REMOVAL WORK ONLY.

TREE REMOVAL PLAN

SCALE 1" = 50'

TR-2

REVISED BY	DATE REVISED

T.T., D.L., D.S. — B.G.

CALCULATED-DESIGNED BY — CHECKED BY

CONSULTANT FUNCTIONAL SUPERVISOR — K.G.M.

STATE OF CALIFORNIA – DEPARTMENT OF TRANSPORTATION — Caltrans

LAST REVISION 07-16-10 — DATE PLOTTED => $DATE — TIME PLOTTED => $TIME

Dist	COUNTY	ROUTE	POST MILES TOTAL PROJECT	SHEET No.	TOTAL SHEETS
05	SLO	101	5.9/6.9	273	290

REGISTERED CIVIL ENGINEER — DATE 05/05/10

PLANS APPROVAL DATE

REGISTERED PROFESSIONAL ENGINEER — Bo Gao — No. C59985 — Exp. 6/30/10 — CIVIL — STATE OF CALIFORNIA

THE STATE OF CALIFORNIA OR ITS OFFICERS OR AGENTS OR COUNTY SHALL NOT BE RESPONSIBLE FOR THE ACCURACY OR COMPLETENESS OF SCANNED COPIES OF THIS PLAN SHEET.

RAJAPPAN & MEYER
CONSULTING ENGINEERS INC .
1038 LEIGH AVE . SUITE 100
SAN JOSE , CA 95126

COUNTY OF SAN LUIS OBISPO
DEPARTMENT OF PUBLIC WORKS
1050 MONTEREY STREET
SAN LUIS OBISPO, CA 93408

FOR NOTES, ABBREVIATIONS, AND LEGEND, SEE SHEET TR-1.

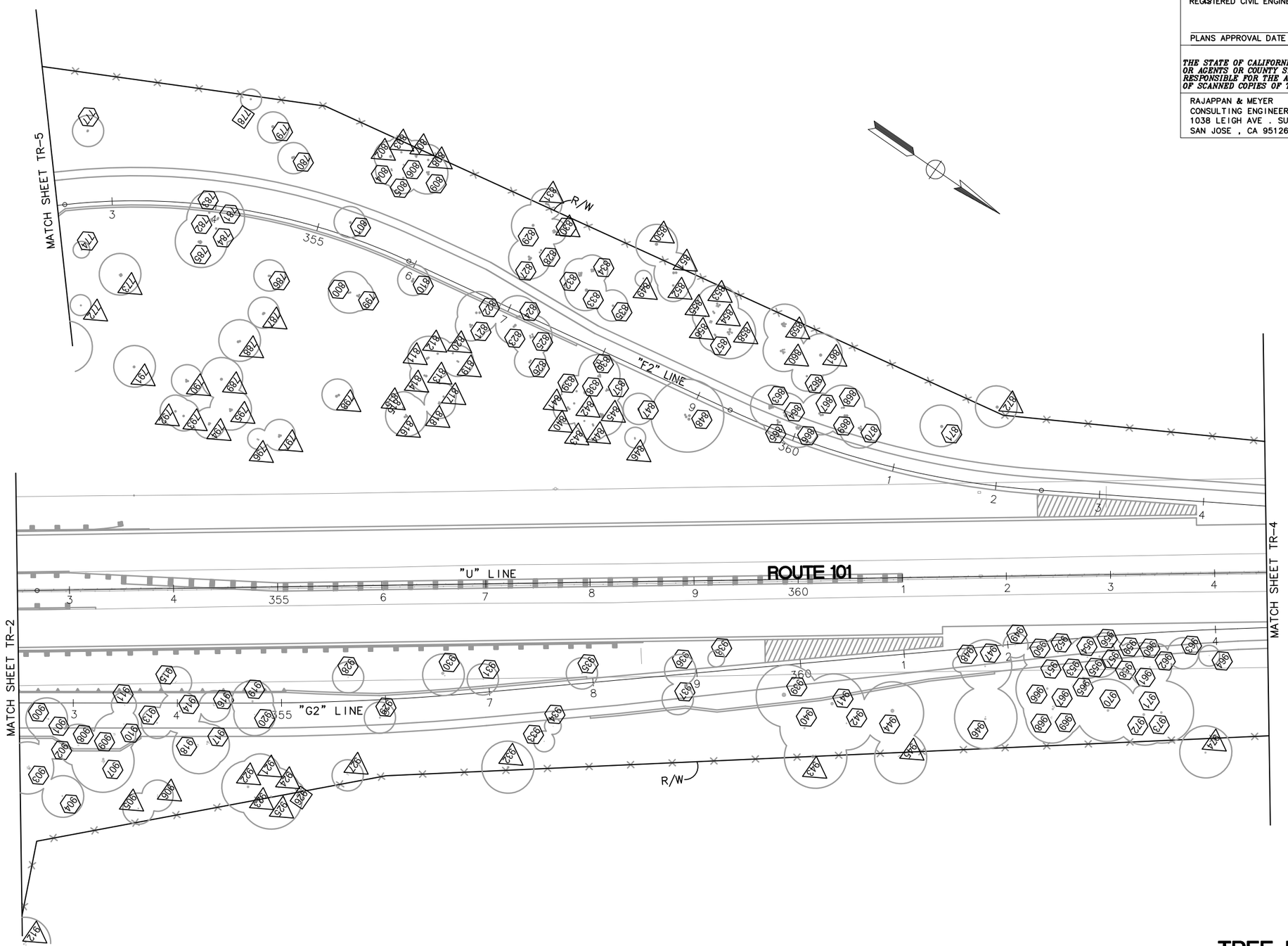

THIS PLAN ACCURATE FOR TREE REMOVAL WORK ONLY.

TREE REMOVAL PLAN

SCALE 1" = 50'

TR-3

REVISED BY	DATE REVISED
T.T., D.L., D.S.	B.G.
CALCULATED-DESIGNED BY	CHECKED BY
CONSULTANT FUNCTIONAL SUPERVISOR	K.G.M.

STATE OF CALIFORNIA - DEPARTMENT OF TRANSPORTATION

Caltrans

LAST REVISION 05-05-10 | DATE PLOTTED => $DATE | TIME PLOTTED => $TIME

Dist	COUNTY	ROUTE	POST MILES TOTAL PROJECT	SHEET No.	TOTAL SHEETS
05	SLO	101	5.9/6.9	274	290

REGISTERED CIVIL ENGINEER — DATE 05/05/10

PLANS APPROVAL DATE

REGISTERED PROFESSIONAL ENGINEER — Bo Gao — No. C59985 — Exp. 6/30/10 — CIVIL — STATE OF CALIFORNIA

THE STATE OF CALIFORNIA OR ITS OFFICERS OR AGENTS OR COUNTY SHALL NOT BE RESPONSIBLE FOR THE ACCURACY OR COMPLETENESS OF SCANNED COPIES OF THIS PLAN SHEET.

RAJAPPAN & MEYER
CONSULTING ENGINEERS INC .
1038 LEIGH AVE . SUITE 100
SAN JOSE , CA 95126

COUNTY OF SAN LUIS OBISPO
DEPARTMENT OF PUBLIC WORKS
1050 MONTEREY STREET
SAN LUIS OBISPO, CA 93408

FOR NOTES, ABBREVIATIONS, AND LEGEND, SEE SHEET TR-1.

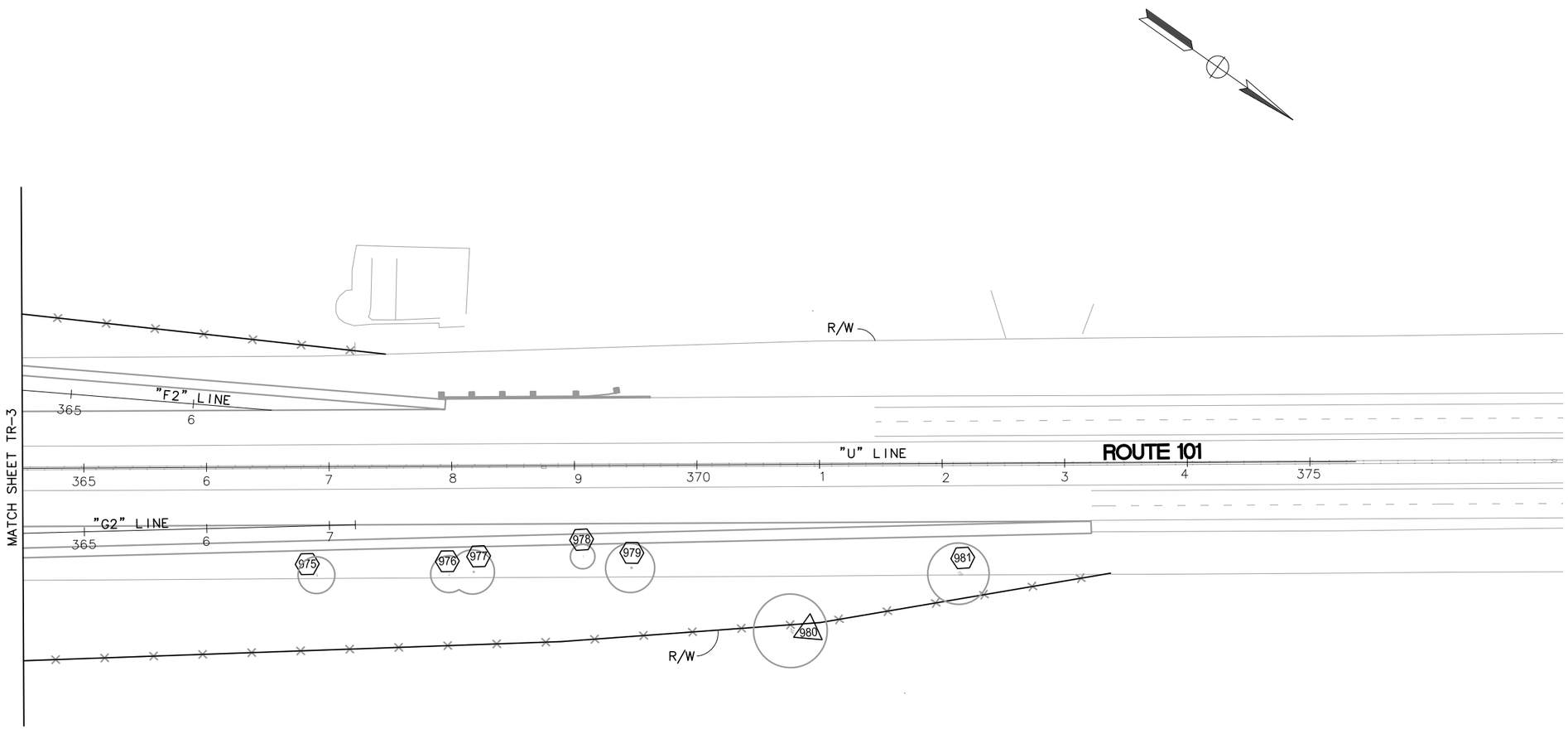

THIS PLAN ACCURATE FOR TREE REMOVAL WORK ONLY.

TREE REMOVAL PLAN

SCALE 1" = 50'

TR-4

REVISED BY	DATE REVISED

T.T., D.L., D.S. — CALCULATED-DESIGNED BY
B.G. — CHECKED BY
K.G.M. — CONSULTANT FUNCTIONAL SUPERVISOR

STATE OF CALIFORNIA – DEPARTMENT OF TRANSPORTATION
Caltrans

LAST REVISION 05-05-10 — DATE PLOTTED => $DATE — TIME PLOTTED => $TIME

BORDER LAST REVISED 4/11/2008 — RELATIVE BORDER SCALE IS IN INCHES 0 1 2 3 — USERNAME =>$USER — DGN FILE => $REQUEST — CU — EA 05-474503

Dist	COUNTY	ROUTE	POST MILES TOTAL PROJECT	SHEET No.	TOTAL SHEETS
05	SLO	101	5.9/6.9	275	290

REGISTERED CIVIL ENGINEER — DATE 07/16/10

PLANS APPROVAL DATE

REGISTERED PROFESSIONAL ENGINEER — Bo Gao — No. C59985 — Exp. 6/30/12 — CIVIL — STATE OF CALIFORNIA

THE STATE OF CALIFORNIA OR ITS OFFICERS OR AGENTS OR COUNTY SHALL NOT BE RESPONSIBLE FOR THE ACCURACY OR COMPLETENESS OF SCANNED COPIES OF THIS PLAN SHEET.

RAJAPPAN & MEYER
CONSULTING ENGINEERS INC .
1038 LEIGH AVE . SUITE 100
SAN JOSE , CA 95126

COUNTY OF SAN LUIS OBISPO
DEPARTMENT OF PUBLIC WORKS
1050 MONTEREY STREET
SAN LUIS OBISPO, CA 93408

FOR NOTES, ABBREVIATIONS, AND LEGEND, SEE SHEET TR-1.

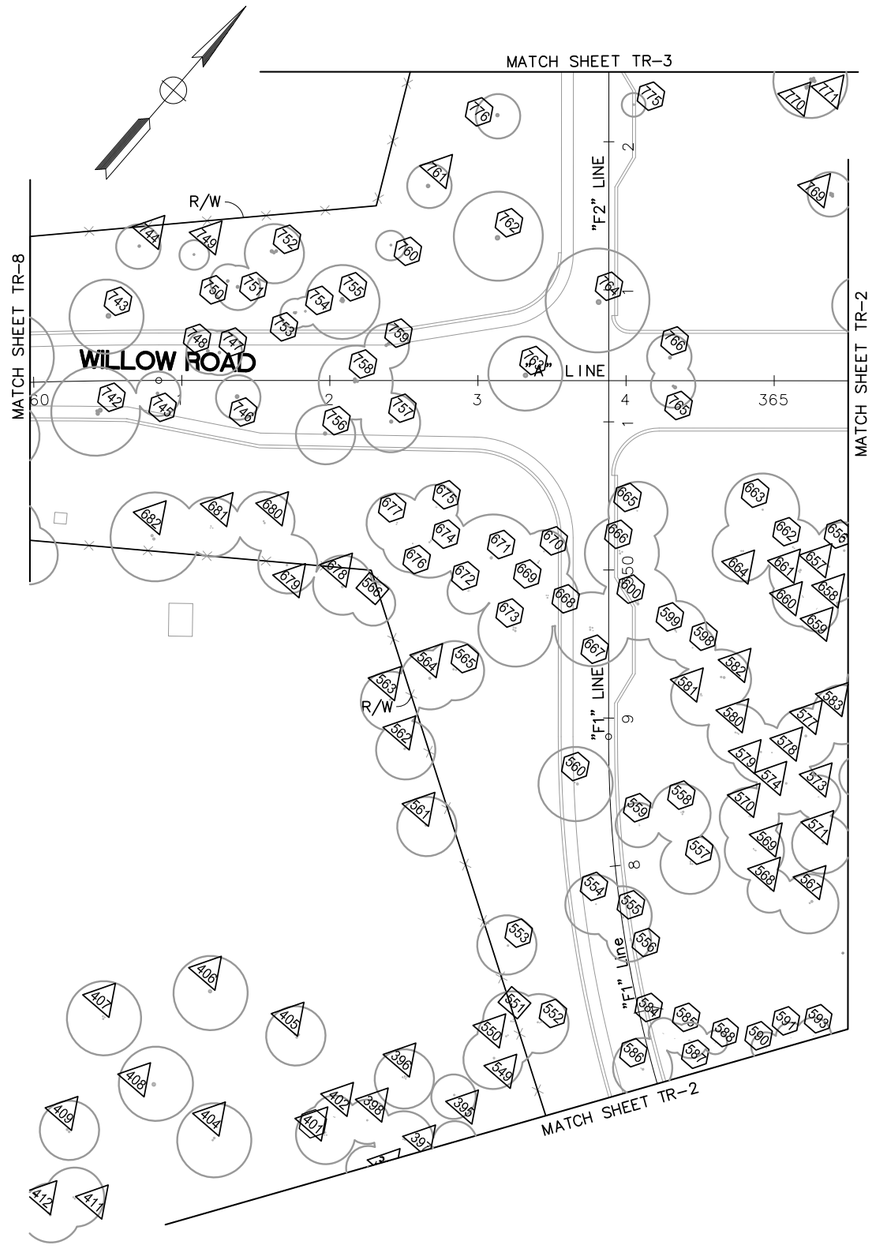

THIS PLAN ACCURATE FOR TREE REMOVAL WORK ONLY.

TREE REMOVAL PLAN

SCALE 1" = 50'

TR-5

REVISED BY	DATE REVISED
T.T., D.L., D.S.	B.G.

CALCULATED-DESIGNED BY	CHECKED BY

CONSULTANT FUNCTIONAL SUPERVISOR: K.G.M.

STATE OF CALIFORNIA – DEPARTMENT OF TRANSPORTATION — Caltrans

LAST REVISION 07-16-10 — DATE PLOTTED => $DATE — TIME PLOTTED => $TIME

BORDER LAST REVISED 4/11/2008 — RELATIVE BORDER SCALE IS IN INCHES 0 1 2 3 — USERNAME =>$USER — DGN FILE => $REQUEST — CU — EA 05-474503

Dist	COUNTY	ROUTE	POST MILES TOTAL PROJECT	SHEET No.	TOTAL SHEETS
05	SLO	101	5.9/6.9	276	290

REGISTERED CIVIL ENGINEER — DATE 05/05/10

PLANS APPROVAL DATE

REGISTERED PROFESSIONAL ENGINEER — Bo Gao — No. C59985 — Exp. 6/30/10 — CIVIL — STATE OF CALIFORNIA

THE STATE OF CALIFORNIA OR ITS OFFICERS OR AGENTS OR COUNTY SHALL NOT BE RESPONSIBLE FOR THE ACCURACY OR COMPLETENESS OF SCANNED COPIES OF THIS PLAN SHEET.

RAJAPPAN & MEYER
CONSULTING ENGINEERS INC .
1038 LEIGH AVE . SUITE 100
SAN JOSE , CA 95126

COUNTY OF SAN LUIS OBISPO
DEPARTMENT OF PUBLIC WORKS
1050 MONTEREY STREET
SAN LUIS OBISPO, CA 93408

FOR NOTES, ABBREVIATIONS, AND LEGEND, SEE SHEET TR-1.

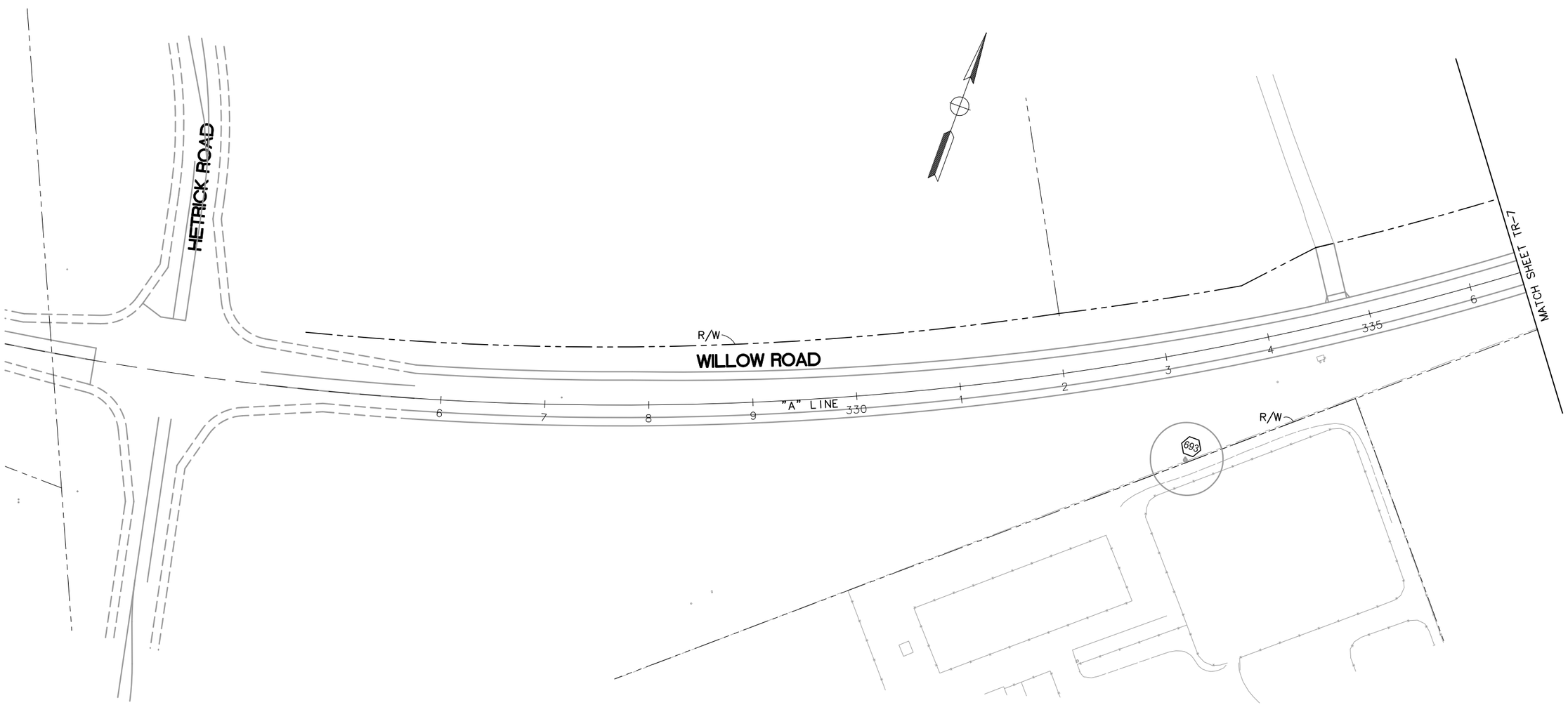

THIS PLAN ACCURATE FOR TREE REMOVAL WORK ONLY.

TREE REMOVAL PLAN

SCALE 1" = 50'

TR-6

REVISED BY	DATE REVISED

T.T., D.L., D.S. — B.G.

CALCULATED-DESIGNED BY — CHECKED BY

CONSULTANT FUNCTIONAL SUPERVISOR — K.G.M.

STATE OF CALIFORNIA – DEPARTMENT OF TRANSPORTATION — Caltrans

LAST REVISION 05-05-10 — DATE PLOTTED => $DATE — TIME PLOTTED => $TIME

BORDER LAST REVISED 4/11/2008 — RELATIVE BORDER SCALE IS IN INCHES 0 1 2 3 — USERNAME =>$USER — DGN FILE => $REQUEST — CU — EA 05-474503

Dist	COUNTY	ROUTE	POST MILES TOTAL PROJECT	SHEET No.	TOTAL SHEETS
05	SLO	101	5.9/6.9	277	290

REGISTERED CIVIL ENGINEER — DATE 05/05/10

PLANS APPROVAL DATE

REGISTERED PROFESSIONAL ENGINEER — Bo Gao — No. C59985 — Exp. 6/30/10 — CIVIL — STATE OF CALIFORNIA

THE STATE OF CALIFORNIA OR ITS OFFICERS OR AGENTS OR COUNTY SHALL NOT BE RESPONSIBLE FOR THE ACCURACY OR COMPLETENESS OF SCANNED COPIES OF THIS PLAN SHEET.

RAJAPPAN & MEYER
CONSULTING ENGINEERS INC .
1038 LEIGH AVE . SUITE 100
SAN JOSE , CA 95126

COUNTY OF SAN LUIS OBISPO
DEPARTMENT OF PUBLIC WORKS
1050 MONTEREY STREET
SAN LUIS OBISPO, CA 93408

FOR NOTES, ABBREVIATIONS, AND LEGEND, SEE SHEET TR-1.

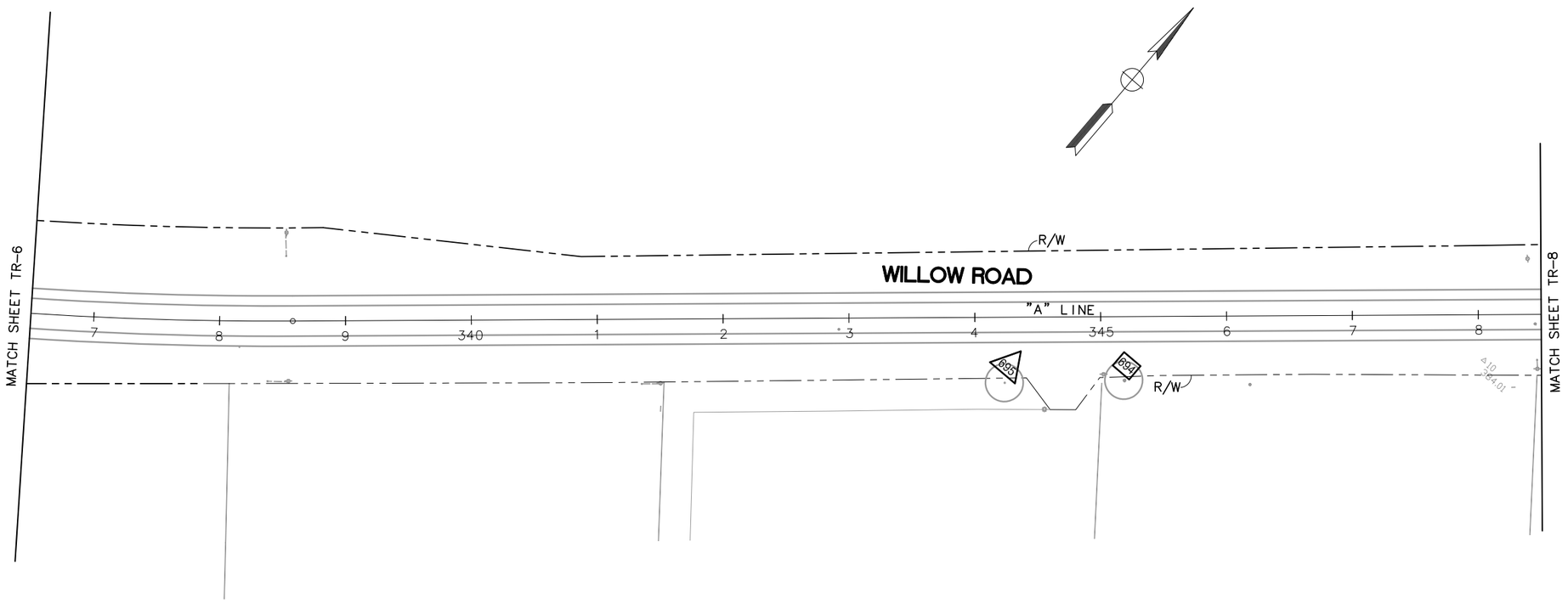

THIS PLAN ACCURATE FOR TREE REMOVAL WORK ONLY.

TREE REMOVAL PLAN

SCALE 1" = 50'

TR-7

REVISED BY	T.T., D.L., D.S.	CALCULATED-DESIGNED BY	CONSULTANT FUNCTIONAL SUPERVISOR
DATE REVISED	B.G.	CHECKED BY	K.G.M.

STATE OF CALIFORNIA – DEPARTMENT OF TRANSPORTATION

Caltrans

LAST REVISION 05-05-10 | DATE PLOTTED => $DATE | TIME PLOTTED => $TIME

BORDER LAST REVISED 4/11/2008 | RELATIVE BORDER SCALE IS IN INCHES 0 1 2 3 | USERNAME =>$USER | DGN FILE => $REQUEST | CU | EA 05-474503

Dist	COUNTY	ROUTE	POST MILES TOTAL PROJECT	SHEET No.	TOTAL SHEETS
05	SLO	101	5.9/6.9	278	290

REGISTERED CIVIL ENGINEER — DATE 07/16/10

PLANS APPROVAL DATE

REGISTERED PROFESSIONAL ENGINEER — Bo Gao — No. C59985 — Exp. 6/30/12 — CIVIL — STATE OF CALIFORNIA

THE STATE OF CALIFORNIA OR ITS OFFICERS OR AGENTS OR COUNTY SHALL NOT BE RESPONSIBLE FOR THE ACCURACY OR COMPLETENESS OF SCANNED COPIES OF THIS PLAN SHEET.

RAJAPPAN & MEYER
CONSULTING ENGINEERS INC .
1038 LEIGH AVE . SUITE 100
SAN JOSE , CA 95126

COUNTY OF SAN LUIS OBISPO
DEPARTMENT OF PUBLIC WORKS
1050 MONTEREY STREET
SAN LUIS OBISPO, CA 93408

FOR NOTES, ABBREVIATIONS, AND LEGEND, SEE SHEET TR-1.

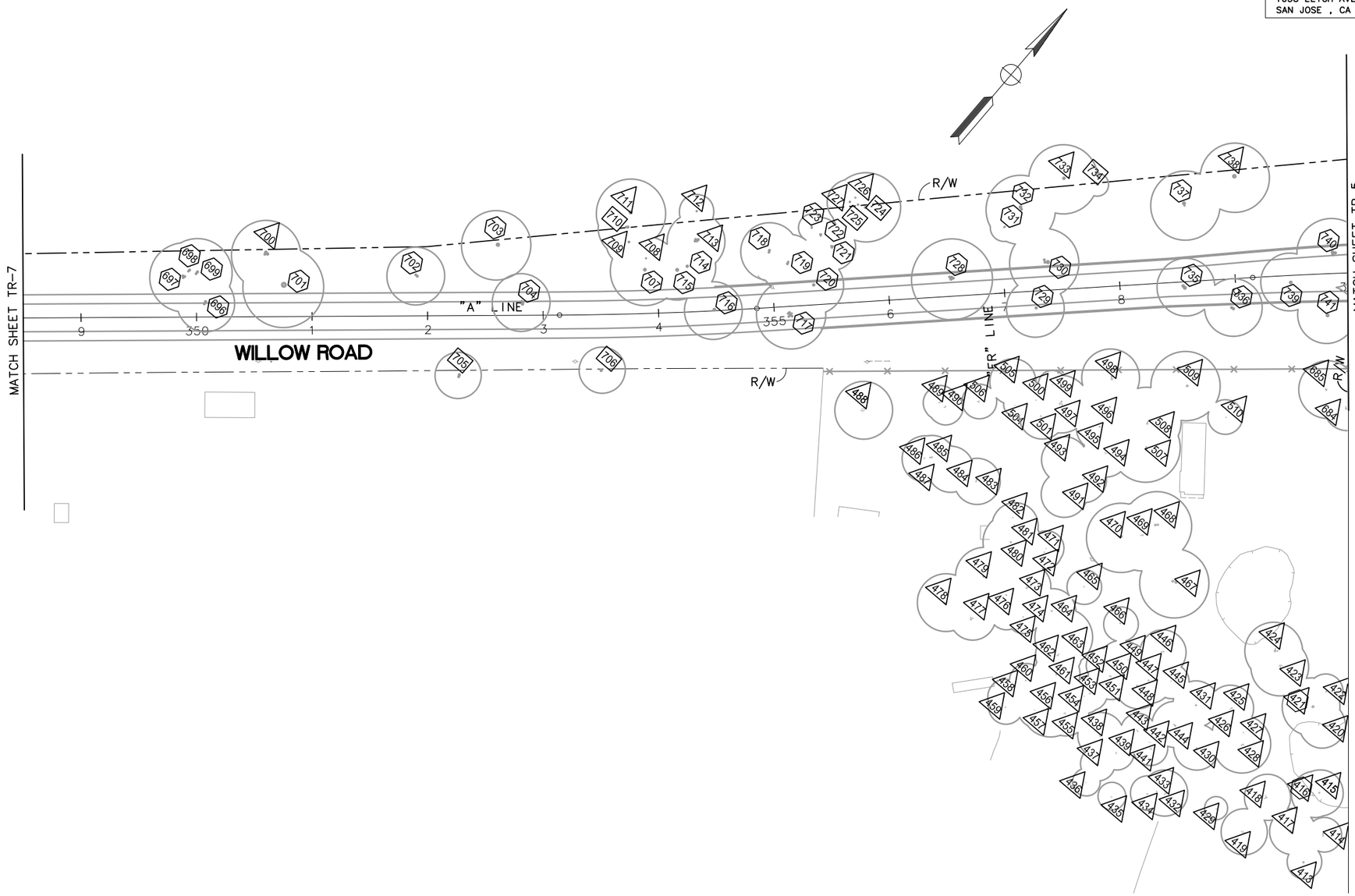

THIS PLAN ACCURATE FOR TREE REMOVAL WORK ONLY.

TREE REMOVAL PLAN

SCALE 1" = 50'

TR-8

REVISED BY	DATE REVISED
T.T., D.L., D.S.	B.G.

CALCULATED-DESIGNED BY	CHECKED BY

CONSULTANT FUNCTIONAL SUPERVISOR: K.G.M.

STATE OF CALIFORNIA – DEPARTMENT OF TRANSPORTATION — Caltrans

LAST REVISION 07-16-10 | DATE PLOTTED => $DATE | TIME PLOTTED => $TIME

BORDER LAST REVISED 4/11/2008 | RELATIVE BORDER SCALE IS IN INCHES 0 1 2 3 | USERNAME =>$USER | DGN FILE => $REQUEST | CU | EA 05-474503

Dist	COUNTY	ROUTE	POST MILES TOTAL PROJECT	SHEET No.	TOTAL SHEETS
05	SLO	101	5.9/6.9	279	290

REGISTERED CIVIL ENGINEER — DATE 07/16/10

PLANS APPROVAL DATE

REGISTERED PROFESSIONAL ENGINEER — Bo Gao — No. C59985 — Exp. 6/30/12 — CIVIL — STATE OF CALIFORNIA

THE STATE OF CALIFORNIA OR ITS OFFICERS OR AGENTS OR COUNTY SHALL NOT BE RESPONSIBLE FOR THE ACCURACY OR COMPLETENESS OF SCANNED COPIES OF THIS PLAN SHEET.

RAJAPPAN & MEYER
CONSULTING ENGINEERS INC .
1038 LEIGH AVE . SUITE 100
SAN JOSE , CA 95126

COUNTY OF SAN LUIS OBISPO
DEPARTMENT OF PUBLIC WORKS
1050 MONTEREY STREET
SAN LUIS OBISPO, CA 93408

FOR NOTES, ABBREVIATIONS, AND LEGEND, SEE SHEET TR-1.

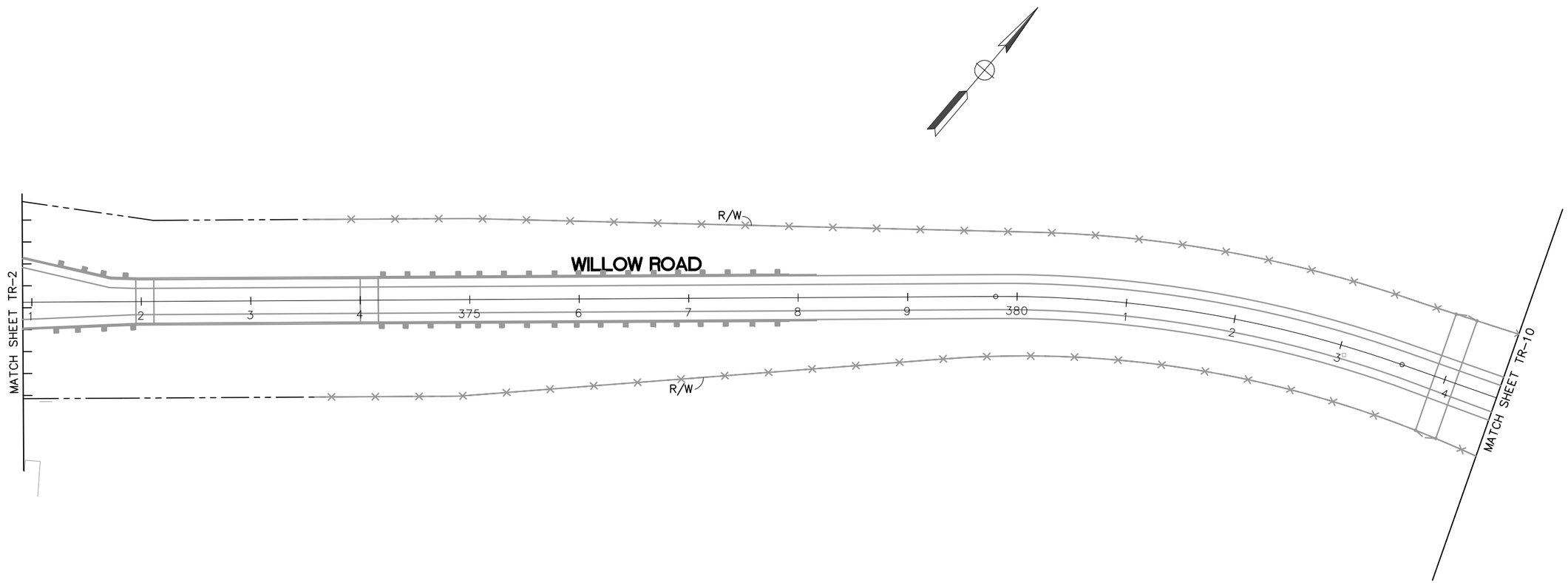

THIS PLAN ACCURATE FOR TREE REMOVAL WORK ONLY.

TREE REMOVAL PLAN

SCALE 1" = 50'

TR-9

REVISED BY	DATE REVISED

T.T., D.L., D.S. — B.G.

CALCULATED-DESIGNED BY — CHECKED BY

CONSULTANT FUNCTIONAL SUPERVISOR — K.G.M.

STATE OF CALIFORNIA – DEPARTMENT OF TRANSPORTATION — Caltrans

LAST REVISION 07-16-10 — DATE PLOTTED => $DATE — TIME PLOTTED => $TIME

Dist	COUNTY	ROUTE	POST MILES TOTAL PROJECT	SHEET No.	TOTAL SHEETS
05	SLO	101	5.9/6.9	280	290

REGISTERED CIVIL ENGINEER — DATE 07/16/10

PLANS APPROVAL DATE

REGISTERED PROFESSIONAL ENGINEER — Bo Gao — No. C59985 — Exp. 6/30/12 — CIVIL — STATE OF CALIFORNIA

THE STATE OF CALIFORNIA OR ITS OFFICERS OR AGENTS OR COUNTY SHALL NOT BE RESPONSIBLE FOR THE ACCURACY OR COMPLETENESS OF SCANNED COPIES OF THIS PLAN SHEET.

RAJAPPAN & MEYER
CONSULTING ENGINEERS INC .
1038 LEIGH AVE . SUITE 100
SAN JOSE , CA 95126

COUNTY OF SAN LUIS OBISPO
DEPARTMENT OF PUBLIC WORKS
1050 MONTEREY STREET
SAN LUIS OBISPO, CA 93408

FOR NOTES, ABBREVIATIONS, AND LEGEND, SEE SHEET TR-1.

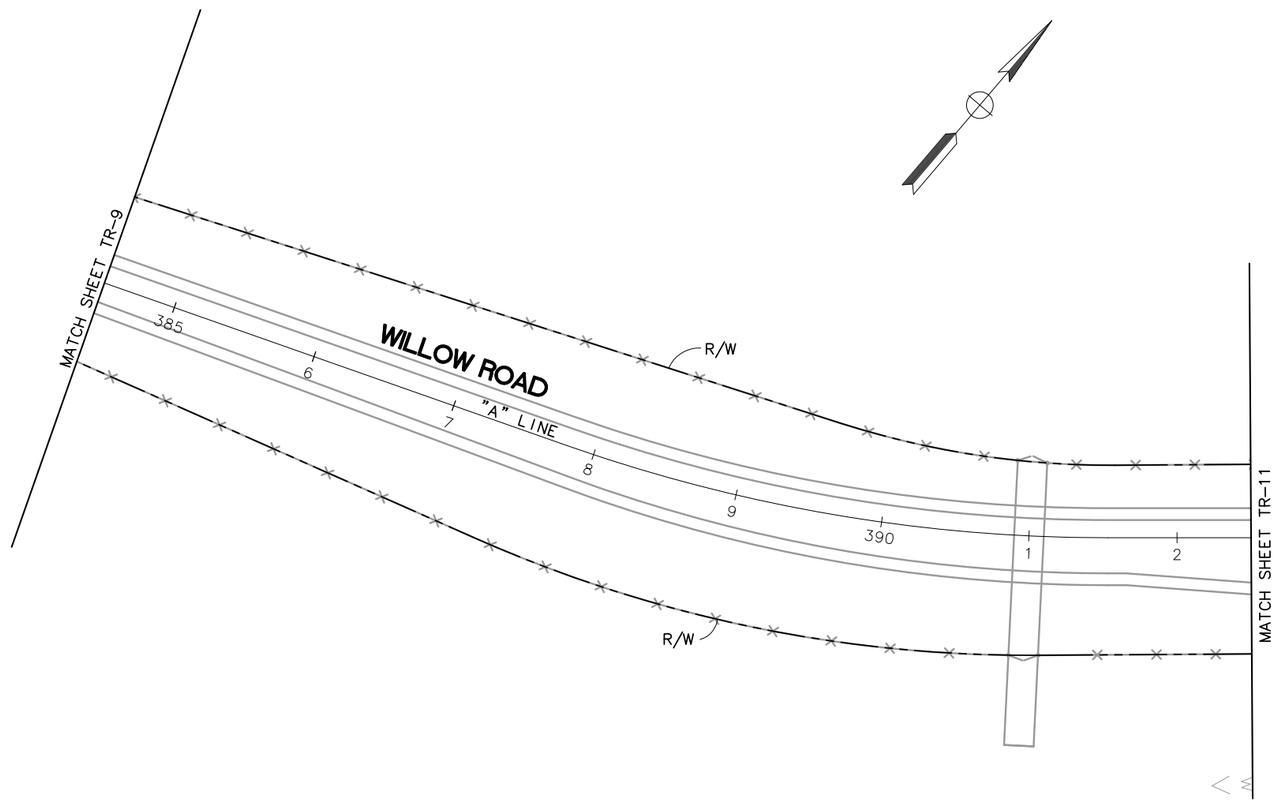

THIS PLAN ACCURATE FOR TREE REMOVAL WORK ONLY.

TREE REMOVAL PLAN

SCALE 1" = 50'

TR-10

REVISED BY	DATE REVISED

T.T., D.L., D.S. — B.G.

CALCULATED-DESIGNED BY — CHECKED BY

CONSULTANT FUNCTIONAL SUPERVISOR — K.G.M.

STATE OF CALIFORNIA – DEPARTMENT OF TRANSPORTATION — Caltrans

LAST REVISION 07-16-10 — DATE PLOTTED => $DATE — TIME PLOTTED => $TIME

BORDER LAST REVISED 4/11/2008 — RELATIVE BORDER SCALE IS IN INCHES 0 1 2 3 — USERNAME =>$USER — DGN FILE => $REQUEST — CU — EA 05-474503

Dist	COUNTY	ROUTE	POST MILES TOTAL PROJECT	SHEET No.	TOTAL SHEETS
05	SLO	101	5.9/6.9	281	290

REGISTERED CIVIL ENGINEER — DATE 07/16/10

PLANS APPROVAL DATE

REGISTERED PROFESSIONAL ENGINEER — Bo Gao — No. C59985 — Exp. 6/30/12 — CIVIL — STATE OF CALIFORNIA

THE STATE OF CALIFORNIA OR ITS OFFICERS OR AGENTS OR COUNTY SHALL NOT BE RESPONSIBLE FOR THE ACCURACY OR COMPLETENESS OF SCANNED COPIES OF THIS PLAN SHEET.

RAJAPPAN & MEYER
CONSULTING ENGINEERS INC .
1038 LEIGH AVE . SUITE 100
SAN JOSE , CA 95126

COUNTY OF SAN LUIS OBISPO
DEPARTMENT OF PUBLIC WORKS
1050 MONTEREY STREET
SAN LUIS OBISPO, CA 93408

FOR NOTES, ABBREVIATIONS, AND LEGEND, SEE SHEET TR-1.

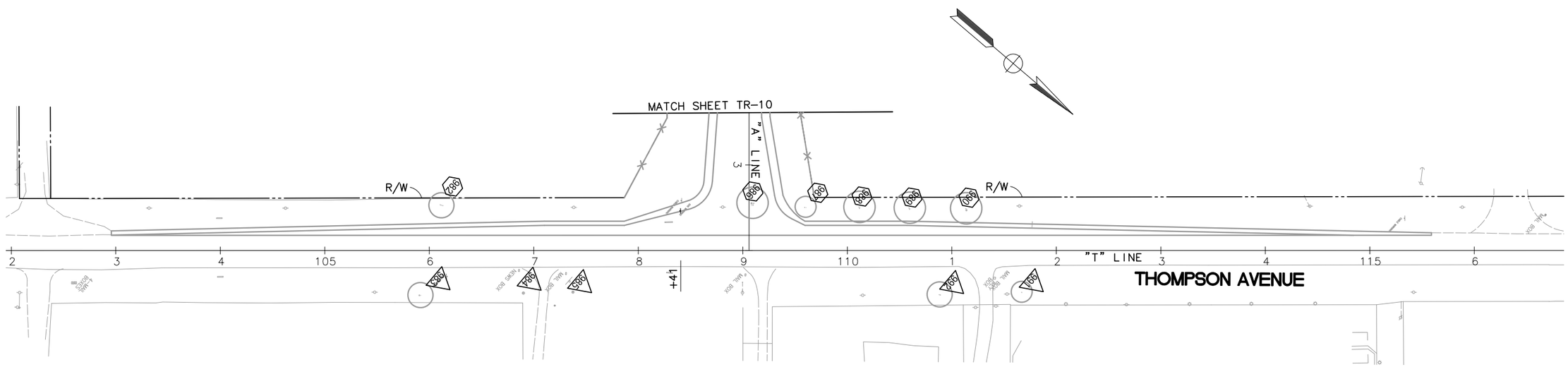

THIS PLAN IS FOR BID ADDITIVE

THIS PLAN ACCURATE FOR TREE REMOVAL WORK ONLY.

TREE REMOVAL PLAN

SCALE 1" = 50'

TR-11A

REVISED BY	DATE REVISED

T.T., D.L., D.S. — B.G.

CALCULATED-DESIGNED BY — CHECKED BY

CONSULTANT FUNCTIONAL SUPERVISOR — K.G.M.

STATE OF CALIFORNIA – DEPARTMENT OF TRANSPORTATION — Caltrans

LAST REVISION 07-16-10 — DATE PLOTTED => $DATE — TIME PLOTTED => $TIME

BORDER LAST REVISED 4/11/2008 — RELATIVE BORDER SCALE IS IN INCHES 0 1 2 3 — USERNAME =>$USER — DGN FILE => $REQUEST — CU — EA 05-474503

Dist	COUNTY	ROUTE	POST MILES TOTAL PROJECT	SHEET No.	TOTAL SHEETS
05	SLO	101	5.9/6.9	282	290

REGISTERED CIVIL ENGINEER — DATE 07/16/10

PLANS APPROVAL DATE

REGISTERED PROFESSIONAL ENGINEER — Bo Gao — No. C59985 — Exp. 6/30/12 — CIVIL — STATE OF CALIFORNIA

THE STATE OF CALIFORNIA OR ITS OFFICERS OR AGENTS OR COUNTY SHALL NOT BE RESPONSIBLE FOR THE ACCURACY OR COMPLETENESS OF SCANNED COPIES OF THIS PLAN SHEET.

RAJAPPAN & MEYER
CONSULTING ENGINEERS INC .
1038 LEIGH AVE . SUITE 100
SAN JOSE , CA 95126

COUNTY OF SAN LUIS OBISPO
DEPARTMENT OF PUBLIC WORKS
1050 MONTEREY STREET
SAN LUIS OBISPO, CA 93408

FOR NOTES, ABBREVIATIONS, AND LEGEND, SEE SHEET TR-1.

Tree Tag #	Tree Species	Dimension at Breast Height (inches)	Remain	Cut/Remove	Trim
301	Cypress	8	X		
302	Cypress	7	X		
303	Oak Cluster	16, 15, 13, 11	X		
304	Oak	15	X		
305	Oak	15	X		
306	Oak Cluster	10, 11, 16	X		
307	Oak Cluster	15, 15, 15	X		
308	Oak	25	X		
309	Oak	16	X		
310	Oak	20	X		
311	Oak Cluster	14, 16	X		
312	Oak	28	X		
313	Oak Cluster	18, 22, 22	X		
314	Oak	40	X		
315	Oak Cluster	17, 18, 19, 18	X		
316	Oak Cluster	20, 19	X		
317	Oak	7	X		
318	Oak	15	X		
319	Oak	8	X		
320	Oak	18	X		
321	Oak	23	X		
322	Oak Cluster	15, 18, 15	X		
323	Oak	18	X		
324	Oak Cluster	22, 18	X		
325	Oak	20	X		
326	Oak	15	X		
327	Oak	27	X		
328	Oak Cluster	22, 26	X		
329	Oak	21, 24	X		
330	Oak	17	X		
331	Oak	24	X		
332	Oak	10, 16	X		
333	Oak	14	X		
334	Oak Cluster	6, 6, 7	X		
335	Oak Cluster	6	X		
336	Oak Cluster	16, 18	X		
337	Oak	14	X		

Please Note: Multiple breast height dimensions represent the number of trunks on tree

Shaded tag numbered rows represent trees that were located on the propery line and tree count was split (shared) between property owners.

Tree Tag #	Tree Species	Dimension at Breast Height (inches)	Remain	Cut/Remove	Trim
338	Oak Cluster	13, 16	X		
339	Oak Cluster	9, 16	X		
340	Oak	24	X		
341	Oak Cluster	12, 13, 15	X		
342	Oak Cluster	18, 22	X		
343	Oak Cluster	20, 22	X		
344	Oak Cluster	15, 18	X		
345	Oak	14	X		
346	Oak Cluster	7, 7, 8, 8, 8, 9, 10	X		
347	Oak	15	X		
348	Oak	24	X		
349	Oak Cluster	8, 8, 10, 10	X		
350	Oak Cluster	10, 15, 12, 16	X		
351	Oak Cluster	27, 25	X		
352	Oak	13	X		
353	Oak	18	X		
354	Oak	17	X		
355	Oak	14	X		
356	Oak Cluster	10, 17	X		
357	Oak	18	X		
358	Oak	17	X		
359	Oak	24	X		
360	Oak	22	X		
361	Oak	18	X		
363	Oak Cluster	17, 19	X		
364	Oak Cluster	11, 14		X	
365	Oak	16		X	
366	Oak Cluster	12, 14		X	
367	Oak	11	X		
368	Oak	19	X		
369	Oak Cluster	13, 15	X		
370	Oak	21	X		
371	Oak Cluster	13, 15, 7, 14	X		
372	Oak	6	X		
374	Oak Cluster	8, 7, 11	X		
375	Oak Cluster	14, 17	X		
376	Oak Cluster	10, 15	X		

Please Note: Multiple breast height dimensions represent the number of trunks on tree

Shaded tag numbered rows represent trees that were located on the propery line and tree count was split (shared) between property owners.

THIS PLAN ACCURATE FOR TREE REMOVAL WORK ONLY.

TREE REMOVAL LIST

TR-12

REVISED BY | DATE REVISED

T.T., D.L., D.S. | B.G.

CALCULATED-DESIGNED BY | CHECKED BY

CONSULTANT FUNCTIONAL SUPERVISOR | K.G.M.

STATE OF CALIFORNIA – DEPARTMENT OF TRANSPORTATION

Caltrans

LAST REVISION 07-16-10 | DATE PLOTTED => $DATE | TIME PLOTTED => $TIME

Dist	COUNTY	ROUTE	POST MILES TOTAL PROJECT	SHEET No.	TOTAL SHEETS
05	SLO	101	5.9/6.9	283	290

REGISTERED CIVIL ENGINEER — DATE 07/16/10

PLANS APPROVAL DATE

REGISTERED PROFESSIONAL ENGINEER — Bo Gao — No. C59985 — Exp. 6/30/12 — CIVIL — STATE OF CALIFORNIA

THE STATE OF CALIFORNIA OR ITS OFFICERS OR AGENTS OR COUNTY SHALL NOT BE RESPONSIBLE FOR THE ACCURACY OR COMPLETENESS OF SCANNED COPIES OF THIS PLAN SHEET.

RAJAPPAN & MEYER
CONSULTING ENGINEERS INC .
1038 LEIGH AVE . SUITE 100
SAN JOSE , CA 95126

COUNTY OF SAN LUIS OBISPO
DEPARTMENT OF PUBLIC WORKS
1050 MONTEREY STREET
SAN LUIS OBISPO, CA 93408

FOR NOTES, ABBREVIATIONS, AND LEGEND, SEE SHEET TR-1.

Tree Tag #	Tree Species	Dimension at Breast Height (inches)	Remain	Cut/Remove	Trim
377	Oak	22	X		
378	Oak	16	X		
379	Oak Cluster	21, 13	X		
380	Oak Cluster	10, 10, 11	X		
381	Oak	33	X		
382	Oak Cluster	9, 11	X		
383	Oak	24	X		
384	Oak Cluster	7, 6, 6, 6, 7	X		
385	Oak	22	X		
386	Oak Cluster	9,10, 11	X		
387	Oak Cluster	13, 13, 15, 13	X		
388	Oak	24	X		
389	Oak Cluster	14, 9	X		
390	Oak Cluster	10, 10, 16	X		
391	Oak Cluster	17, 17, 18, 20	X		
392	Oak	22	X		
393	Oak Cluster	24, 28	X		
394	Oak	17	X		
395	Oak	20	X		
396	Oak Cluster	8, 14, 14, 16, 15	X		
397	Oak Cluster	14, 21	X		
398	Oak	18	X		
399	Oak	19	X		
400	Oak	21	X		
401	Oak Cluster	15, 13, 13	X		
402	Oak Cluster	8, 10	X		
403	Oak	18	X		
404	Oak Cluster	18, 22	X		
405	Oak Cluster	22, 22, 16	X		
406	Oak Cluster	34	X		
407	Oak Cluster	16, 17, 14	X		
408	Oak	37	X		
409	Oak Cluster	23, 21	X		
411	Oak Cluster	15, 16	X		
412	Oak Cluster	20, 23	X		
413	Oak	25	X		
414	Oak Cluster	17, 19	X		

Please Note: Multiple breast height dimensions represent the number of trunks on tree

Shaded tag numbered rows represent trees that were located on the propery line and tree count was split (shared) between property owners.

Tree Tag #	Tree Species	Dimension at Breast Height (inches)	Remain	Cut/Remove	Trim
415	Oak	20	X		
416	Oak Cluster	16, 18, 16	X		
417	Oak Cluster	13, 16, 18	X		
418	Oak Cluster	21, 13, 15	X		
419	Oak Cluster	13, 14, 12, 12	X		
420	Oak Cluster	12, 24, 15	X		
421	Oak	32	X		
422	Oak Cluster	8, 11, 14	X		
423	Oak Cluster	11, 14, 13, 15, 16	X		
424	Oak Cluster	16, 27, 18	X		
425	Oak Cluster	15, 17	X		
426	Oak Cluster	18	X		
427	Oak	13	X		
428	Oak Cluster	18, 16	X		
429	Oak Cluster	13	X		
430	Oak Cluster	17, 14, 13	X		
431	Oak	22	X		
432	Oak Cluster	15, 15	X		
433	Oak	16	X		
434	Oak	18	X		
435	Oak Cluster	7, 9, 10	X		
436	Oak	10	X		
437	Oak Cluster	14, 17	X		
438	Oak Cluster	13, 12, 14, 11, 12	X		
439	Oak Cluster	11, 14	X		
441	Oak Cluster	12, 9, 12	X		
442	Oak Cluster	9, 8	X		
443	Oak Cluster	14, 13	X		
444	Oak	15, 22	X		
445	Oak	13	X		
446	Oak Cluster	18, 16	X		
447	Oak	18	X		
448	Oak	20	X		
449	Oak	13	X		
450	Oak Cluster	6, 11, 12	X		
451	Oak Cluster	7, 9, 14, 9, 11	X		
452	Oak Cluster	10, 7	X		

Please Note: Multiple breast height dimensions represent the number of trunks on tree

Shaded tag numbered rows represent trees that were located on the propery line and tree count was split (shared) between property owners.

THIS PLAN ACCURATE FOR TREE REMOVAL WORK ONLY.

TREE REMOVAL LIST

TR-13

REVISED BY | DATE REVISED
T.T., D.L., D.S. | B.G.
CALCULATED-DESIGNED BY | CHECKED BY
CONSULTANT FUNCTIONAL SUPERVISOR | K.G.M.
STATE OF CALIFORNIA – DEPARTMENT OF TRANSPORTATION | Caltrans

LAST REVISION 07-16-10 | DATE PLOTTED => $DATE | TIME PLOTTED => $TIME

Dist	COUNTY	ROUTE	POST MILES TOTAL PROJECT	SHEET No.	TOTAL SHEETS
05	SLO	101	5.9/6.9	284	290

REGISTERED CIVIL ENGINEER — DATE 07/16/10

PLANS APPROVAL DATE

REGISTERED PROFESSIONAL ENGINEER — Bo Gao — No. C59985 — Exp. 6/30/12 — CIVIL — STATE OF CALIFORNIA

THE STATE OF CALIFORNIA OR ITS OFFICERS OR AGENTS OR COUNTY SHALL NOT BE RESPONSIBLE FOR THE ACCURACY OR COMPLETENESS OF SCANNED COPIES OF THIS PLAN SHEET.

RAJAPPAN & MEYER
CONSULTING ENGINEERS INC .
1038 LEIGH AVE . SUITE 100
SAN JOSE , CA 95126

COUNTY OF SAN LUIS OBISPO
DEPARTMENT OF PUBLIC WORKS
1050 MONTEREY STREET
SAN LUIS OBISPO, CA 93408

FOR NOTES, ABBREVIATIONS, AND LEGEND, SEE SHEET TR-1.

Tree Tag #	Tree Species	Dimension at Breast Height (inches)	Remain	Cut/Remove	Trim
453	Oak Cluster	10, 11, 10	X		
454	Oak	12	X		
455	Oak Cluster	13, 14, 9	X		
456	Oak Cluster	19, 17, 23	X		
457	Oak	12	X		
458	Oak	10	X		
459	Oak Cluster	13, 10	X		
460	Oak	17	X		
461	Oak Cluster	13, 18	X		
462	Oak Cluster	11, 9, 13, 13	X		
463	Oak Cluster	14, 8, 9, 10, 17	X		
464	Oak Cluster	11, 11, 15	X		
465	Oak Cluster	11, 10	X		
466	Oak	19	X		
467	Oak Cluster	30, 35	X		
468	Oak Cluster	28, 26	X		
469	Oak Cluster	15, 17	X		
470	Oak Cluster	23, 23	X		
471	Oak	12	X		
472	Oak	15	X		
473	Oak Cluster	11, 16, 17	X		
474	Oak	18	X		
475	Oak Cluster	9, 7, 11	X		
476	Oak Cluster	12, 16	X		
477	Oak Cluster	15, 17, 21	X		
478	Oak	26	X		
479	Oak	21	X		
480	Oak	22	X		
481	Oak	17	X		
482	Oak	14	X		
483	Oak Cluster	17, 16	X		
484	Oak Cluster	12, 16	X		
485	Oak Cluster	19, 20	X		
486	Oak Cluster	7, 8, 13	X		
487	Oak Cluster	8, 11	X		
488	Oak Cluster	11, 15,14, 14, 8, 13, 8	X		
489	Oak Cluster	12, 12, 14	X		

Please Note: Multiple breast height dimensions represent the number of trunks on tree

Shaded tag numbered rows represent trees that were located on the propery line and tree count was split (shared) between property owners.

Tree Tag #	Tree Species	Dimension at Breast Height (inches)	Remain	Cut/Remove	Trim
490	Oak Cluster	13, 17	X		
491	Oak Cluster	17, 14	X		
492	Oak	20	X		
493	Oak	21	X		
494	Oak Cluster	7, 6, 6, 7, 9, 10	X		
495	Oak	20	X		
496	Oak	18	X		
497	Oak Cluster	11, 18, 18, 19, 14	X		
498	Oak Cluster	21, 24	X		
499	Oak Cluster	6, 7	X		
500	Oak	13	X		
501	Oak Cluster	18	X		
504	Oak Cluster	7, 6	X		
505	Oak Cluster	6, 15, 14, 14	X		
506	Oak Cluster	11, 12, 14	X		
507	Oak Cluster	12, 14, 12, 16	X		
508	Oak Cluster	18, 23	X		
509	Oak	28	X		
510	Oak	14	X		
511	Oak	6		X	
512	Oak	17		X	
513	Oak Cluster	6, 8, 6		X	
515	Oak Cluster	6, 6, 7, 6	X		
518	Oak	16		X	
519	Oak	20		X	
520	Oak Cluster	14, 15		X	
522	Oak Cluster	18, 22		X	
523	Oak Cluster	18, 24		X	
526	Oak Cluster	9, 11, 6, 7, 12, 13, 10		X	
527	Oak Cluster	10, 12		X	
528	Oak Cluster	11, 11, 11, 11		X	
529	Oak	16		X	
530	Oak	16		X	
531	Oak Cluster	19, 15		X	
532	Oak Cluster	15, 14		X	
533	Oak Cluster	15, 14		X	
534	Oak	12		X	

Please Note: Multiple breast height dimensions represent the number of trunks on tree

Shaded tag numbered rows represent trees that were located on the propery line and tree count was split (shared) between property owners.

THIS PLAN ACCURATE FOR TREE REMOVAL WORK ONLY.

TREE REMOVAL LIST

TR-14

STATE OF CALIFORNIA - DEPARTMENT OF TRANSPORTATION — Caltrans

CONSULTANT FUNCTIONAL SUPERVISOR: K.G.M.

CALCULATED-DESIGNED BY: T.T., D.L., D.S. — CHECKED BY: B.G.

REVISED BY — DATE REVISED

LAST REVISION 07-16-10 — DATE PLOTTED => $DATE — TIME PLOTTED => $TIME

Dist	COUNTY	ROUTE	POST MILES TOTAL PROJECT	SHEET No.	TOTAL SHEETS
05	SLO	101	5.9/6.9	285	290

REGISTERED CIVIL ENGINEER — DATE 07/16/10

PLANS APPROVAL DATE

REGISTERED PROFESSIONAL ENGINEER — Bo Gao — No. C59985 — Exp. 6/30/12 — CIVIL — STATE OF CALIFORNIA

THE STATE OF CALIFORNIA OR ITS OFFICERS OR AGENTS OR COUNTY SHALL NOT BE RESPONSIBLE FOR THE ACCURACY OR COMPLETENESS OF SCANNED COPIES OF THIS PLAN SHEET.

RAJAPPAN & MEYER
CONSULTING ENGINEERS INC .
1038 LEIGH AVE . SUITE 100
SAN JOSE , CA 95126

COUNTY OF SAN LUIS OBISPO
DEPARTMENT OF PUBLIC WORKS
1050 MONTEREY STREET
SAN LUIS OBISPO, CA 93408

FOR NOTES, ABBREVIATIONS, AND LEGEND, SEE SHEET TR-1.

Tree Tag #	Tree Species	Dimension at Breast Height (inches)	Remain	Cut/Remove	Trim
535	Oak	23		X	
536	Oak Cluster	8, 7, 6, 7, 7		X	
537	Oak Cluster	13, 13, 7, 9, 14	X		
538	Oak Cluster	6, 6, 6, 7	X		
539	Oak Cluster	25, 17, 17		X	
541	Oak Cluster	9, 9, 13		X	
542	Oak	30		X	
543	Oak Cluster	12, 7, 6, 8, 8, 7		X	
544	Oak Cluster	11, 16, 17		X	
545	Oak Cluster	12, 10		X	
546	Oak	12		X	
547	Oak Cluster	12, 13, 13	X		
548	Oak Cluster	6, 7	X		
549	Oak	21	X		
550	Oak Cluster	17, 13	X		
551	Oak Cluster	9, 11, 16, 14			X
552	Oak Cluster	11, 17, 17		X	
553	Oak	22		X	
554	Oak Cluster	14, 13		X	
555	Oak Cluster	20, 6		X	
556	Oak Cluster	13, 10, 14		X	
557	Oak Cluster	15, 15, 15		X	
558	Oak Cluster	10, 15, 20		X	
559	Oak Cluster	8, 12		X	
560	Oak Cluster	16, 24		X	
561	Oak	24	X		
562	Oak Cluster	20, 11	X		
563	Oak	20	X		
564	Oak Cluster	24	X		
565	Oak Cluster	19, 15		X	
566	Oak	19	X		
567	Oak Cluster	17, 24	X		
568	Oak	18	X		
569	Oak Cluster	9, 13, 13	X		
570	Oak Cluster	10, 13, 15	X		
571	Oak	20	X		
573	Oak Cluster	7, 7, 6	X		

Please Note: Multiple breast height dimensions represent the number of trunks on tree

Shaded tag numbered rows represent trees that were located on the propery line and tree count was split (shared) between property owners.

Tree Tag #	Tree Species	Dimension at Breast Height (inches)	Remain	Cut/Remove	Trim
574	Oak	20	X		
575	Oak	17	X		
576	Oak	14	X		
577	Oak	21	X		
578	Oak	12	X		
579	Oak	17	X		
580	Oak Cluster	11, 13, 15	X		
581	Oak Cluster	16, 9, 12	X		
582	Oak Cluster	23, 20	X		
583	Oak	24	X		
584	Oak Cluster	6, 7		X	
585	Oak	7		X	
586	Oak Cluster	11, 22		X	
587	Oak Cluster	6, 6, 9, 8		X	
588	Oak	6		X	
590	Oak	11		X	
591	Oak Cluster	7		X	
592	Oak	11		X	
593	Oak Cluster	8		X	
595	Oak Cluster	7		X	
598	Oak	13		X	
599	Oak Cluster	18, 13		X	
600	Oak Cluster	16, 12, 24		X	
647	Oak Cluster	9, 7, 10, 13, 12, 10, 10, 20	X		
648	Oak Cluster	22, 20, 15	X		
649	Oak Cluster	10, 11, 16	X		
650	Oak Cluster	12, 16, 15, 8, 11		X	
651	Oak Cluster	9, 8		X	
652	Oak Cluster	10, 11, 14, 16, 15		X	
653	Oak	13		X	
654	Oak Cluster	10, 11		X	
655	Oak	13		X	
656	Oak	21		X	
657	Oak Cluster	13, 18	X		
658	Oak Cluster	11, 11	X		
659	Oak Cluster	7, 7	X		
660	Oak Cluster	10, 11	X		

Please Note: Multiple breast height dimensions represent the number of trunks on tree

Shaded tag numbered rows represent trees that were located on the propery line and tree count was split (shared) between property owners.

THIS PLAN ACCURATE FOR TREE REMOVAL WORK ONLY.

TREE REMOVAL LIST

TR-15

REVISED BY | DATE REVISED
T.T., D.L., D.S. | B.G.
CALCULATED-DESIGNED BY | CHECKED BY
CONSULTANT FUNCTIONAL SUPERVISOR | K.G.M.
STATE OF CALIFORNIA – DEPARTMENT OF TRANSPORTATION | Caltrans

LAST REVISION 07-16-10 | DATE PLOTTED => $DATE | TIME PLOTTED => $TIME

Dist	COUNTY	ROUTE	POST MILES TOTAL PROJECT	SHEET No.	TOTAL SHEETS
				286	290

REGISTERED CIVIL ENGINEER — DATE 07/16/10

PLANS APPROVAL DATE

REGISTERED PROFESSIONAL ENGINEER — Bo Gao — No. C59985 — Exp. 6/30/12 — CIVIL — STATE OF CALIFORNIA

THE STATE OF CALIFORNIA OR ITS OFFICERS AND AGENTS SHALL NOT BE

RAJAPPAN & MEYER
CONSULTING ENGINEERS INC.
1038 LEIGH AVE. SUITE 100
SAN JOSE, CA 95126

COUNTY OF SAN LUIS OBISPO
DEPARTMENT OF PUBLIC WORKS
1050 MONTEREY STREET
SAN LUIS OBISPO, CA 93408

FOR NOTES, ABBREVIATIONS, AND LEGEND, SEE SHEET TR-1.

Tree Tag #	Tree Species	Dimension at Breast Height (inches)	Remain	Cut/Remove	Trim
661	Oak Cluster	12, 14, 20	X		
662	Oak Cluster	12, 15		X	
663	Oak	18		X	
664	Oak Cluster	15, 15	X		
665	Oak Cluster	13		X	
666	Oak Cluster	14, 15, 18		X	
667	Oak Cluster	11, 15, 15, 17		X	
668	Oak Cluster	12, 15, 11		X	
669	Oak Cluster	12, 16		X	
670	Oak	14		X	
671	Oak	27		X	
672	Oak Cluster	7, 7, 11		X	
673	Oak Cluster	14, 16, 15, 19		X	
674	Oak Cluster	15, 17		X	
675	Oak Cluster	7, 7, 9		X	
676	Oak	13		X	
677	Oak Cluster	12, 13		X	
678	Oak	24	X		
679	Oak	20	X		
680	Oak Cluster	16, 18	X		
681	Oak Cluster	6, 12, 11, 10	X		
682	Oak Cluster	26, 26	X		
684	Oak Cluster	14, 22	X		
685	Oak Cluster	24	X		
686	Pepper Cluster	9, 7, 8, 8, 11, 12, 14, 10		X	
687	Oak Cluster	11, 10		X	
688	Oak Cluster	9, 10	X		
691	Oak Cluster	8	X		
692	Willow Cluster	2, 6	X		
693	Multi-Trunk Pine	13, 42		X	
694	Multi-Trunk Acacia	6, 7, 7			X
695	Acacia	8	X		
696	Multi-Trunk Oak	20, 17		X	
697	Oak Cluster	14, 14, 17		X	
698	Multi-Trunk Oak	13, 16		X	
699	Oak Cluster	16, 18		X	
700	Multi-Trunk Oak	16, 22, 20	X		

Please Note: Multiple breast height dimensions represent the number of trunks on tree

Shaded tag numbered rows represent trees that were located on the propery line and tree count was split (shared) between property owners.

Tree Tag #	Tree Species	Dimension at Breast Height (inches)	Remain	Cut/Remove	Trim
701	Oak	47		X	
702	Multi-Trunk Oak	15, 16		X	
703	Oak	30	X		
704	Multi-Trunk Oak	6, 7, 13, 20		X	
705	Multi-Trunk Oak	16, 18			X
706	Multi-Trunk Oak	6, 7, 8, 9			X
707	Oak	24		X	
708	Oak	8	X		
709	Oak	14	X		
710	Multi-Trunk Oak	12, 18			X
711	Oak	27	X		
712	Oak	10	X		
713	Mult-Trunk Oak	10, 14, 13, 7, 20	X		
714	Oak	20		X	
715	Oak	26		X	
716	Oak	26		X	
717	Oak Cluster	16, 7, 11, 7, 8, 12, 12, 12		X	
718	Oak Cluser	14, 16		X	
719	Oak Cluster	13, 15		X	
720	Oak	20		X	
721	Oak Cluster	11, 11, 10		X	
722	Oak Cluster	8, 6, 7, 6		X	
723	Oak Cluster	9, 9		X	
724	Oak Cluster	13, 13			X
725	Oak	12			X
726	Oak	7	X		
727	Oak	12	X		
728	Multi-Trunk Oak	17, 20, 14, 15		X	
729	Oak	18		X	
730	Oak Cluster	16, 28, 15		X	
731	Oak Cluster	6, 7		X	
732	Multi-Trunk Oak	15, 24		X	
733	Oak	22	X		
734	Oak Cluster	6, 6, 6			X
735	Multi-Trunk Oak	25, 22		X	
736	Multi-Trunk Oak	19, 17		X	
737	Multi-Trunk Oak	8, 26		X	

Please Note: Multiple breast height dimensions represent the number of trunks on tree

Shaded tag numbered rows represent trees that were located on the propery line and tree count was split (shared) between property owners.

THIS PLAN ACCURATE FOR TREE REMOVAL WORK ONLY.

TREE REMOVAL LIST

TR-16

REVISED BY | DATE REVISED | T.T., D.L., D.S. | CALCULATED-DESIGNED BY | CHECKED BY | CONSULTANT FUNCTIONAL SUPERVISOR K.G.M.

STATE OF CALIFORNIA – DEPARTMENT OF TRANSPORTATION Caltrans

LAST REVISION | DATE PLOTTED => $DATE | TIME PLOTTED => $TIME

Dist	COUNTY	ROUTE	POST MILES TOTAL PROJECT	SHEET No.	TOTAL SHEETS
05	SLO	101	5.9/6.9	287	290

REGISTERED CIVIL ENGINEER 07/16/10 DATE

PLANS APPROVAL DATE

REGISTERED PROFESSIONAL ENGINEER Bo Gao No. C59985 Exp. 6/30/12 CIVIL STATE OF CALIFORNIA

THE STATE OF CALIFORNIA OR ITS OFFICERS OR AGENTS OR COUNTY SHALL NOT BE RESPONSIBLE FOR THE ACCURACY OR COMPLETENESS OF SCANNED COPIES OF THIS PLAN SHEET.

RAJAPPAN & MEYER
CONSULTING ENGINEERS INC .
1038 LEIGH AVE . SUITE 100
SAN JOSE , CA 95126

COUNTY OF SAN LUIS OBISPO
DEPARTMENT OF PUBLIC WORKS
1050 MONTEREY STREET
SAN LUIS OBISPO, CA 93408

FOR NOTES, ABBREVIATIONS, AND LEGEND, SEE SHEET TR-1.

Tree Tag #	Tree Species	Dimension at Breast Height (inches)	Remain	Cut/Remove	Trim
738	Oak	32	X		
739	Oak	24		X	
740	Multi-Trunk Oak	24, 20, 18		X	
741	Oak	26		X	
742	Multi-Trunk Oak	12, 21, 25		X	
743	Oak	32		X	
744	Oak	14	X		
745	Oak	15		X	
746	Oak	23		X	
747	Oak	14		X	
748	Oak	16		X	
749	Oak	8	X		
750	Oak	15		X	
751	Oak	17		X	
752	Multi-Trunk Oak	15, 16, 19		X	
753	Multi-Trunk Oak	6, 7, 8		X	
754	Oak	7		X	
755	Mult-Trunk Oak	6, 7, 9, 8, 18		X	
756	Oak	20		X	
757	Oak	19		X	
758	Multi-Trunk Oak	14, 13, 16		X	
759	Oak Cluster	14, 15		X	
760	Oak	8		X	
761	Oak	22	X		
762	Oak	30		X	
763	Oak	30		X	
764	Oak	33		X	
765	Multi-Trunk Oak	11, 18		X	
766	Oak	17		X	
767	Multi-Trunk Oak	17, 22		X	
768	Multi-Trunk Oak	6, 10		X	
769	Mult-Trunk Oak	9, 10, 12, 12	X		
770	Multi-Trunk Oak	9, 14, 15	X		
771	Oak Cluster	11, 13, 15, 14, 18	X		
772	Oak	9	X		
773	Multi-Trunk Oak	13, 7, 14, 8	X		
774	Oak	6		X	

Please Note: Multiple breast height dimensions represent the number of trunks on tree

Shaded tag numbered rows represent trees that were located on the propery line and tree count was split (shared) between property owners.

Tree Tag #	Tree Species	Dimension at Breast Height (inches)	Remain	Cut/Remove	Trim
775	Oak	6		X	
776	Oak	20		X	
777	Multi-Trunk Oak	6, 6, 6, 6		X	
778	Oak	11			X
779	Oak	21		X	
780	Multi-Trunk Oak	14, 18		X	
781	Oak Cluster	12, 13		X	
782	Multi-Trunk Oak	17, 13		X	
783	Oak	14		X	
784	Oak	14		X	
785	Oak Cluster	11, 9, 15, 18		X	
786	Multi-Trunk Oak	10, 14		X	
787	Oak Cluster	7, 13, 14	X		
788	Multi-Trunk Oak	15, 19	X		
789	Oak	20	X		
790	Oak Cluster	12, 12, 10	X		
791	Oak	18	X		
792	Oak	16	X		
793	Oak	15	X		
794	Multi-Trunk Oak	6, 13, 8	X		
795	Multi-Trunk Oak	9, 13, 15	X		
796	Multi-Trunk Oak	6, 6	X		
797	Multi-Trunk Oak	9, 13, 13	X		
798	Multi-Trunk Oak	16, 19	X		
799	Multi-Trunk Oak	11, 14, 11		X	
800	Multi-Trunk Oak	11, 13		X	
801	Oak	18		X	
802	Oak	20	X		
803	Oak	13	X		
804	Oak Cluster	7, 7		X	
805	Oak	13		X	
806	Oak	6		X	
807	Oak Cluster	6, 12, 14	X		
808	Oak	15	X		
809	Oak Cluster	13, 17, 9		X	
810	Multi Trunk Oak	13, 19		X	
811	Multi-Trunk Oak	12, 16	X		

Please Note: Multiple breast height dimensions represent the number of trunks on tree

Shaded tag numbered rows represent trees that were located on the propery line and tree count was split (shared) between property owners.

THIS PLAN ACCURATE FOR TREE REMOVAL WORK ONLY.

TREE REMOVAL LIST

TR-17

REVISED BY | DATE REVISED
T.T., D.L., D.S. | B.G.
CALCULATED-DESIGNED BY | CHECKED BY
CONSULTANT FUNCTIONAL SUPERVISOR | K.G.M.
STATE OF CALIFORNIA – DEPARTMENT OF TRANSPORTATION
Caltrans

LAST REVISION 07-16-10 | DATE PLOTTED => $DATE | TIME PLOTTED => $TIME

Dist	COUNTY	ROUTE	POST MILES TOTAL PROJECT	SHEET No.	TOTAL SHEETS
05	SLO	101	5.9/6.9	288	290

REGISTERED CIVIL ENGINEER — DATE 07/16/10

PLANS APPROVAL DATE

REGISTERED PROFESSIONAL ENGINEER — Bo Gao — No. C59985 — Exp. 6/30/12 — CIVIL — STATE OF CALIFORNIA

THE STATE OF CALIFORNIA OR ITS OFFICERS OR AGENTS OR COUNTY SHALL NOT BE RESPONSIBLE FOR THE ACCURACY OR COMPLETENESS OF SCANNED COPIES OF THIS PLAN SHEET.

RAJAPPAN & MEYER
CONSULTING ENGINEERS INC .
1038 LEIGH AVE . SUITE 100
SAN JOSE , CA 95126

COUNTY OF SAN LUIS OBISPO
DEPARTMENT OF PUBLIC WORKS
1050 MONTEREY STREET
SAN LUIS OBISPO, CA 93408

FOR NOTES, ABBREVIATIONS, AND LEGEND, SEE SHEET TR-1.

Tree Tag #	Tree Species	Dimension at Breast Height (inches)	Remain	Cut/Remove	Trim
812	Oak	13	X		
813	Oak	10	X		
814	Multi-Trunk Oak	11, 17	X		
815	Oak	13	X		
816	Oak Cluster	8, 14, 14	X		
817	Oak	12	X		
818	Oak Cluster	6, 8, 11, 11	X		
819	Multi-Trunk Oak	8, 9	X		
820	Oak	11	X		
821	Multi-Trunk Oak	11, 11, 11		X	
822	Multi-Trunk Oak	16, 15		X	
823	Oak Cluster	18, 14		X	
824	Oak Cluster	16, 18		X	
825	Oak Cluster	8, 10, 12 16		X	
826	Oak Cluster	11, 14		X	
827	Oak Cluster	14, 14, 19		X	
828	Multi-Trunk Oak	13, 8		X	
829	Oak	19		X	
830	Oak Cluster	6, 6, 7, 9, 8, 8		X	
831	Multi-Trunk Oak	12, 12	X		
832	Oak Cluster	6, 6, 7, 7, 8, 8, 8, 7		X	
833	Oak	24		X	
834	Oak Cluster	6, 8, 9, 9, 11		X	
835	Oak	14		X	
836	Oak Cluster	6, 9, 9, 14		X	
837	Oak Cluster	6, 9, 9, 10		X	
838	Oak Cluster	6, 7, 9, 9		X	
839	Oak	12		X	
840	Oak	13	X		
841	Multi-Trunk Oak	12, 14	X		
842	Oak	12	X		
843	Oak	10	X		
844	Oak Cluster	10, 10	X		
845	Oak Cluster	9, 9, 12, 12, 17	X		
846	Multi-Trunk Oak	6, 7	X		
847	Oak Cluster	6, 15		X	
848	Multi-Trunk Oak	13, 16, 20, 18		X	

Please Note: Multiple breast height dimensions represent the number of trunks on tree

Shaded tag numbered rows represent trees that were located on the propery line and tree count was split (shared) between property owners.

Tree Tag #	Tree Species	Dimension at Breast Height (inches)	Remain	Cut/Remove	Trim
849	Oak	6	X		
850	Oak	23	X		
851	Multi-Trunk Oak	16, 18	X		
852	Oak	14	X		
853	Oak Cluster	6, 7, 11, 12, 13	X		
854	Multi-Trunk Oak	11, 9	X		
855	Oak	11	X		
856	Oak Cluster	6, 6, 7, 8	X		
857	Multi-Trunk Oak	9, 10		X	
858	Multi-Trunk Oak	14, 13, 12, 10, 17	X		
859	Oak Cluster	8, 8, 8, 10, 13, 18	X		
860	Oak Cluster	6, 9, 10, 7, 8, 12	X		
861	Oak	22	X		
862	Oak	13		X	
863	Oak Cluster	6, 7, 12, 10, 13, 15, 8, 8, 7		X	
864	Oak Cluster	8, 9, 11, 13		X	
865	Oak Cluster	9, 13, 11, 9		X	
866	Oak Cluster	7, 8, 9, 11, 12, 8		X	
867	Multi-Trunk Oak	11. 13, 13		X	
868	Multi-Trunk Oak	14, 8		X	
869	Multi-Trunk Oak	17, 19		X	
870	Multi-Trunk Oak	7, 13, 24		X	
871	Oak	21		X	
872	Oak	21	X		
873	Multi-Trunk Oak	10, 12, 15, 16, 15, 12, 7, 11		X	
874	Multi-Trunk Oak	10, 14, 18		X	
875	Multi-Trunk Oak	7, 7, 8, 13, 10		X	
876	Multi-Trunk Oak	7, 6, 10, 14, 9, 8, 8, 9, 7		X	
877	Oak	7		X	
878	Oak	13		X	
879	Oak	7		X	
880	Multi-Trunk Oak	12, 14, 15		X	
881	Oak	24		X	
882	Multi-Trunk Oak	9, 15		X	
883	Oak	15		X	
884	Multi-Trunk Oak	17, 17		X	
885	Multi-Trunk Oak	8, 13		X	

Please Note: Multiple breast height dimensions represent the number of trunks on tree

Shaded tag numbered rows represent trees that were located on the propery line and tree count was split (shared) between property owners.

THIS PLAN ACCURATE FOR TREE REMOVAL WORK ONLY.

TREE REMOVAL LIST

TR-18

REVISED BY	DATE REVISED

T.T., D.L., D.S. — B.G.

CALCULATED-DESIGNED BY — CHECKED BY

CONSULTANT FUNCTIONAL SUPERVISOR — K.G.M.

STATE OF CALIFORNIA – DEPARTMENT OF TRANSPORTATION — Caltrans

LAST REVISION 07-16-10 — DATE PLOTTED => $DATE — TIME PLOTTED => $TIME

Dist	COUNTY	ROUTE	POST MILES TOTAL PROJECT	SHEET No.	TOTAL SHEETS
05	SLO	101	5.9/6.9	289	290

REGISTERED CIVIL ENGINEER — DATE 07/16/10

PLANS APPROVAL DATE

REGISTERED PROFESSIONAL ENGINEER — Bo Gao — No. C59985 — Exp. 6/30/12 — CIVIL — STATE OF CALIFORNIA

THE STATE OF CALIFORNIA OR ITS OFFICERS OR AGENTS OR COUNTY SHALL NOT BE RESPONSIBLE FOR THE ACCURACY OR COMPLETENESS OF SCANNED COPIES OF THIS PLAN SHEET.

RAJAPPAN & MEYER
CONSULTING ENGINEERS INC .
1038 LEIGH AVE . SUITE 100
SAN JOSE , CA 95126

COUNTY OF SAN LUIS OBISPO
DEPARTMENT OF PUBLIC WORKS
1050 MONTEREY STREET
SAN LUIS OBISPO, CA 93408

FOR NOTES, ABBREVIATIONS, AND LEGEND, SEE SHEET TR-1.

Tree Tag #	Tree Species	Dimension at Breast Height (inches)	Remain	Cut/Remove	Trim
886	Oak	22		X	
887	Oak	30		X	
888	Oak	24		X	
889	Oak Cluster	13, 10, 15, 12, 10		X	
890	Multi-Trunk Oak	10, 15		X	
891	Multi-Trunk Oak	13, 18, 18		X	
892	Multi-Trunk Oak	10, 14		X	
893	Multi-Trunk Oak	10, 10, 7, 10, 10		X	
894	Multi-Trunk Oak	14, 15 16, 19		X	
895	Multi-Trunk Oak	13, 15, 13, 8, 8		X	
896	Oak	10		X	
897	Multi-Trunk Oak	18, 29		X	
898	Multi-Trunk Oak	12, 15, 9		X	
899	Oak	9		X	
900	Multi-Trunk Oak	12, 21		X	
901	Multi-Trunk Oak	10, 14		X	
902	Oak	12		X	
903	Multi-Trunk Oak	15, 13, 15, 30		X	
904	Oak	20		X	
905	Oak	20	X		
906	Oak	13, 15	X		
907	Multi-Trunk Oak	6, 8, 12, 10, 22, 13, 28		X	
908	Multi-Trunk Oak	6, 8, 12, 8		X	
909	Multi-Trunk Oak	6, 6, 7, 9, 10, 12, 8		X	
910	Multi-Trunk Oak	6, 7, 8, 8		X	
911	Multi-Trunk Oak	7, 11		X	
912	Multi-Trunk Oak	26, 14, 19	X		
913	Oak	20		X	
914	Oak	24		X	
915	Multi-Trunk Oak	10, 11		X	
916	Multi-Trunk Oak	11, 12, 6, 13 (possibly dead)?		X	
917	Multi-Trunk Oak	15, 17, 26		X	
918	Multi-Trunk Oak	7, 14, 16		X	
919	Oak	25		X	
920	Oak	13		X	
921	Oak	17	X		
922	Oak	30	X		

Please Note: Multiple breast height dimensions represent the number of trunks on tree

Shaded tag numbered rows represent trees that were located on the propery line and tree count was split (shared) between property owners.

Tree Tag #	Tree Species	Dimension at Breast Height (inches)	Remain	Cut/Remove	Trim
923	Oak	27	X		
924	Multi-Trunk Oak	6, 13	X		
925	Oak	17	X		
926	Oak	10			X
927	Multi-Trunk Oak	13, 16	X		
928	Oak	13		X	
929	Oak	24		X	
930	Multi-Trunk Oak	36, 15		X	
931	Oak	13		X	
932	Oak	29	X		
933	Oak	13		X	
934	Oak	9		X	
935	Oak	19		X	
936	Multi-Trunk Oak	6, 7, 7		X	
937	Oak	22		X	
938	Oak	6		X	
939	Oak	50		X	
940	Oak	24		X	
941	Oak	38		X	
942	Oak	18		X	
943	Multi-Trunk Oak	30, 41	X		
944	Oak	44		X	
945	Multi-Trunk Oak	13, 13, 13, 13, 16	X		
946	Oak Cluster	14, 26		X	
947	Multi-Trunk Oak	18, 18		X	
948	Oak	7		X	
949	Multi-Trunk Oak	9, 9		X	
950	Oak	7		X	
951	Multi-Trunk Oak	9, 14		X	
952	Oak	23		X	
953	Oak	20		X	
954	Oak	16		X	
955	Oak	24		X	
956	Oak	11		X	
957	Oak	10		X	
958	Oak	10		X	
959	Oak	15		X	

Please Note: Multiple breast height dimensions represent the number of trunks on tree

Shaded tag numbered rows represent trees that were located on the propery line and tree count was split (shared) between property owners.

THIS PLAN ACCURATE FOR TREE REMOVAL WORK ONLY.

TREE REMOVAL LIST

TR-19

REVISED BY | DATE REVISED

T.T., D.L., D.S. | B.G.

CALCULATED-DESIGNED BY | CHECKED BY

CONSULTANT FUNCTIONAL SUPERVISOR | K.G.M.

STATE OF CALIFORNIA - DEPARTMENT OF TRANSPORTATION

Caltrans

LAST REVISION 07-16-10 | DATE PLOTTED => $DATE | TIME PLOTTED => $TIME

Dist	COUNTY	ROUTE	POST MILES TOTAL PROJECT	SHEET No.	TOTAL SHEETS
05	SLO	101	5.9/6.9	290	290

REGISTERED CIVIL ENGINEER — DATE 07/16/10

PLANS APPROVAL DATE

REGISTERED PROFESSIONAL ENGINEER — Bo Gao — No. C59985 — Exp. 6/30/12 — CIVIL — STATE OF CALIFORNIA

THE STATE OF CALIFORNIA OR ITS OFFICERS OR AGENTS OR COUNTY SHALL NOT BE RESPONSIBLE FOR THE ACCURACY OR COMPLETENESS OF SCANNED COPIES OF THIS PLAN SHEET.

RAJAPPAN & MEYER
CONSULTING ENGINEERS INC .
1038 LEIGH AVE . SUITE 100
SAN JOSE , CA 95126

COUNTY OF SAN LUIS OBISPO
DEPARTMENT OF PUBLIC WORKS
1050 MONTEREY STREET
SAN LUIS OBISPO, CA 93408

FOR NOTES, ABBREVIATIONS, AND LEGEND, SEE SHEET TR-1.

Tree Tag #	Tree Species	Dimension at Breast Height (inches)	Remain	Cut/Remove	Trim
960	Oak	17		X	
961	Oak	19		X	
962	Oak	9		X	
963	Multi-Trunk Oak	6, 10, 14		X	
964	Oak	10		X	
965	Multi-Trunk Oak	7, 7, 6, 6		X	
966	Oak	27		X	
967	Multi-Trunk Oak	12, 16, 16, 25		X	
968	Multi-Trunk Oak	6, 7, 10, 9, 11		X	
969	Oak	6		X	
970	Oak	30		X	
971	Oak	6		X	
972	Oak	32		X	
973	Oak	29		X	
974	Oak	24	X		
975	Multi-Trunk Oak	11, 14		X	
976	Oak Cluster	7, 14		X	
977	Oak	24		X	
978	Oak Cluster	7, 6, 6		X	
979	Oak	26		X	
980	Multi-Trunk Oak	6, 11, 1, 17, 18, 12	X		
981	Elderberry Cluster	10, 10, 10, 10, 12, 12, 12, 14, 12		X	
982	Multi-Trunk Pepper	12, 10, 13		X	
983	Multi-Trunk Pepper	9, 19	X		
984	Dead Pepper	36	X		
985	Dead Pepper	35	X		
986	Multi-Trunk Pepper	24, 16, 10, 16	X		
987	Multi-Trunk Pepper	8, 13	X		
988	Multi-Trunk Pepper	12, 7, 8, 13	X		
989	Multi-Trunk Pepper	7, 11, 14	X		
990	Multi-Trunk Pepper	6, 11, 24	X		
991	Pine	13	X		
992	Multi-Trunk Pepper	11, 14	X		

Please Note: Multiple breast height dimensions represent the number of trunks on tree

Shaded tag numbered rows represent trees that were located on the propery line and tree count was split (shared) between property owners.

Willow Road Extension - Phase II Tree Count Table

January 2010

Tree Species	# of Trees
Oak Trees	1282
Pepper	33
Pine	3
Willow	2
Acacia	4
Cypress	2
Elderberry	9
TREE TOTAL	***1335***

Oak Tree Count Per Property:

APN #091-301-045	(Hermreck Group)	70
APN #091-301-046	(Nipomo Group)	329
APN #091-301-028	(Ponce)	163
APN #091-301-021	(Universal Life Church)	465
APN #091-301-041	(Canada-West)	22
APN #091-301-033	(Cavaletto)	2
APN #091-251-016	(Heather Mehlschan)	6
APN #091-251-017	(Charles Mehlschan)	156
US Hwy 101		67
Total Oak Tree Count		***1280***

Oak Tree Count Remain/Remove/Trim

Remain	640
Remove	619
Trim	23
Total Oak Tree Count	***1282***

TREE TAG #	TREE SPECIES	DIMENSION AT BREAST HEIGHT (INCHES)	REMAIN	CUT/REMOVE	TRIM
982	MULTI-TRUCK PEPPER	12, 10, 13		X	
983	MULTI-TRUCK PEPPER	9, 19	X		
984	DEAD PEPPER	36	X		
985	DEAD PEPPER	35	X		
986	MULTI-TRUCK PEPPER	24, 16, 10, 16		X	
987	MULTI-TRUCK PEPPER	8, 13		X	
988	MULTI-TRUCK PEPPER	12, 7, 8, 13		X	
989	MULTI-TRUCK PEPPER	7, 11, 14		X	
990	MULTI-TRUCK PEPPER	6, 11, 24		X	
991	PINE	13	X		
992	MULTI-TRUCK PEPPER	11, 14	X		

	EA
TOTAL ADDITIVE TREE REMOVED	19

THIS QUANTITY IS FOR BID ADDITIVE

THIS PLAN ACCURATE FOR TREE REMOVAL WORK ONLY.

TREE REMOVAL LIST

TR-20

REVISED BY — DATE REVISED

T.T., D.L., D.S. — B.G.

CALCULATED-DESIGNED BY — CHECKED BY

CONSULTANT FUNCTIONAL SUPERVISOR — K.G.M.

STATE OF CALIFORNIA - DEPARTMENT OF TRANSPORTATION — Caltrans

LAST REVISION 07-16-10 — DATE PLOTTED => $DATE — TIME PLOTTED => $TIME