| DIST | COUNTY | ROUTE | POST MILES TOTAL PROJECT | SHEET No. | TOTAL SHEETS |
|---|---|---|---|---|---|
| 05 | SLO | 101 | 5.9/6.9 | 210 | 290 |

REGISTERED CIVIL ENGINEER 4/30/10 DATE

PLANS APPROVAL DATE

*The State of California or its officers or agents shall not be responsible for the accuracy or completeness of electronic copies of this plan sheet.*

REGISTERED PROFESSIONAL ENGINEER ALLEN WANG No. C 66503 Exp. 06/30/12 CIVIL STATE OF CALIFORNIA


COUNTY OF SAN LUIS OBISPO
PUBLIC WORKS AND TRANSPORTATION DEPARTMENT
1050 MONTEREY STREET
SAN LUIS OBISPO, CA 93408

RAJAPPAN & MEYER
CONSULTING ENGINEERS, INC.
1038 LEIGH AVE, SUITE 100
SAN JOSE, CA 95126


LEGEND:

- Indicates point of minimum vertical clearance
- Indicates Metal Beam Guard Railing
- Indicates Deck Drain Type D-2
- Indicates Chain Link Fence (Type CL-6)

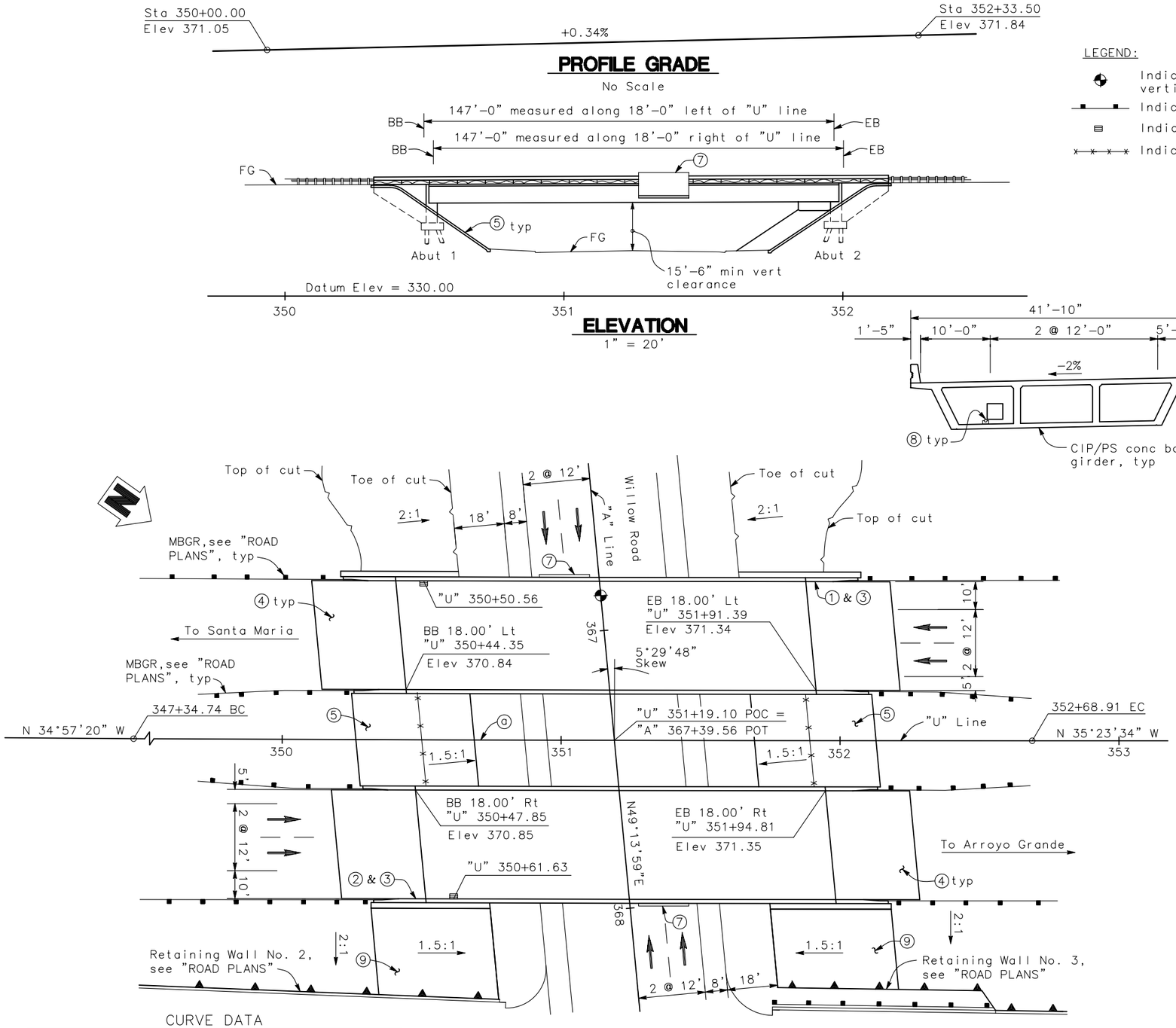


CURVE DATA

| CURVE NO. | R | Δ | T | L |
|---|---|---|---|---|
| ⓐ | 70,000.00' | 0°26'14" | 267.09' | 534.17' |

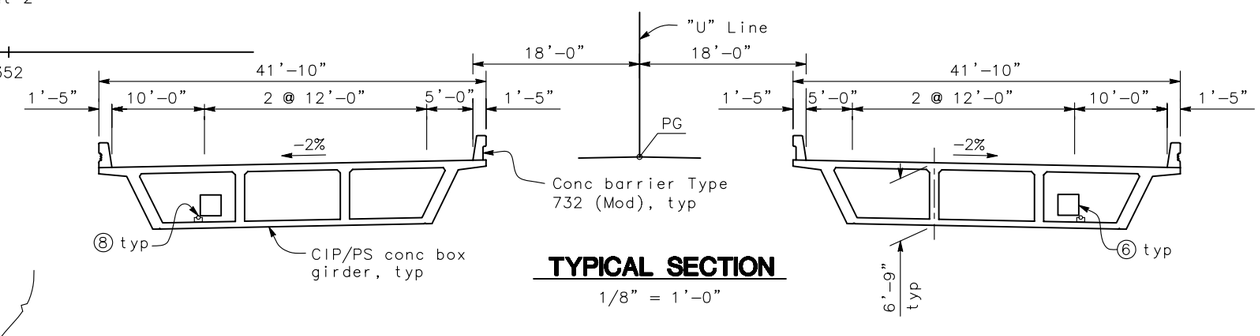


## QUANTITIES

| | | |
|---|---|---|
| Strcucture Excavation (Bridge) | 946 | CY |
| Structure Backfill (Bridge) | 418 | CY |
| Furnish Piling (Class 140) (Alternative W) | 3,706 | LF |
| Drive Pile (Class 140) (Alternative W) | 72 | EA |
| Prestressing Cast-in-Place Concrete | 1 | LS |
| Structural Concrete, Bridge Footing | 126 | CY |
| Structural Concrete, Bridge | 1,229 | CY |
| Structural Concrete, Approach Slab (Type N) | 186 | CY |
| Architectural Texture (Slope Paving) | 1,315 | SF |
| Architectural Texture (Concrete Barrier) | 540 | SF |
| Anti-Graffiti Coating | 9,681 | SF |
| Joint Seal (MR 2") | 168 | LF |
| Bar Reinforcing Steel (Bridge) | 300,040 | LBS |
| Welded Steel Pipe Casing (Bridge) | 156 | LF |
| Slope Paving (Concrete) | 7,559 | SF |
| Bridge Deck Drainage System | 1,495 | LBS |
| Chain Link Fence (Type CL-6) | 68 | LF |
| Concrete Barrier (Type 732 Modified) | 736 | LF |

NOTES:

1. Traffic will pass through construction site.
2. See "GENERAL PLAN NO. 2" sheet for Stage Construction

① Paint 'Bridge No. 49-0252L'
② Paint 'Bridge No. 49-0252R'
③ Paint 'Willow Road Undercrossing'
④ Structure Approach Type N (30S)
⑤ Concrete Slope Paving (slope 1.5:1)
⑥ Future Utility Opening
⑦ Bridge Mounted Sign, see "ROAD PLANS"
⑧ 2" Spare Conduit, see "ELECTRICAL PLANS"
⑨ Concrete Paving, see "ROAD PLANS"

| | | | | | | | |
|---|---|---|---|---|---|---|---|
| DESIGN OVERSIGHT | DESIGN | BY A. WANG | CHECKED P. SHINN | LRFD | LIVE LOADING: HL93 W/'LOW-BOY' AND PERMIT DESIGN VEHICLE | | |
| | DETAILS | BY W. Y. TAN | CHECKED P. SHINN | LAYOUT | BY A. WANG | CHECKED K. HARIRSAZ | |
| SIGN OFF DATE | QUANTITIES | BY A. WANG | CHECKED W. Y. TAN | SPECIFICATIONS | BY K. HARIRSAZ | PLANS AND SPECS COMPARED K. HARIRSAZ | |

PREPARED FOR THE STATE OF CALIFORNIA DEPARTMENT OF TRANSPORTATION

K. HARIRSAZ
PROJECT ENGINEER

BRIDGE NO. 49-0252 R/L
POST MILES 6.45

# WILLOW ROAD UNDERCROSSING

# GENERAL PLAN NO. 1

DESIGN GENERAL PLAN SHEET (ENGLISH) (REV. 06/01/09)

ORIGINAL SCALE IN INCHES FOR REDUCED PLANS 0 1 2 3

CU 05
EA 474501

FILE => $REQUEST

DISREGARD PRINTS BEARING EARLIER REVISION DATES

REVISION DATES (PRELIMINARY STAGE ONLY) 9/2009 1/2010 3/2010 4/2010

SHEET 1 OF 19

USERNAME => $USER DATE PLOTTED => $DATE TIME PLOTTED => $TIME

| DIST | COUNTY | ROUTE | POST MILES TOTAL PROJECT | SHEET No. | TOTAL SHEETS |
|---|---|---|---|---|---|
| 05 | SLO | 101 | 5.9/6.9 | 211 | 290 |

REGISTERED CIVIL ENGINEER DATE 4/30/10

PLANS APPROVAL DATE

*The State of California or its officers or agents shall not be responsible for the accuracy or completeness of electronic copies of this plan sheet.*

REGISTERED PROFESSIONAL ENGINEER ALLEN WANG No. C 66503 Exp. 06/30/12 CIVIL STATE OF CALIFORNIA


COUNTY OF SAN LUIS OBISPO
PUBLIC WORKS AND TRANSPORTATION DEPARTMENT
1050 MONTEREY STREET
SAN LUIS OBISPO, CA 93408

RAJAPPAN & MEYER
CONSULTING ENGINEERS, INC.
1038 LEIGH AVE, SUITE 100
SAN JOSE, CA 95126


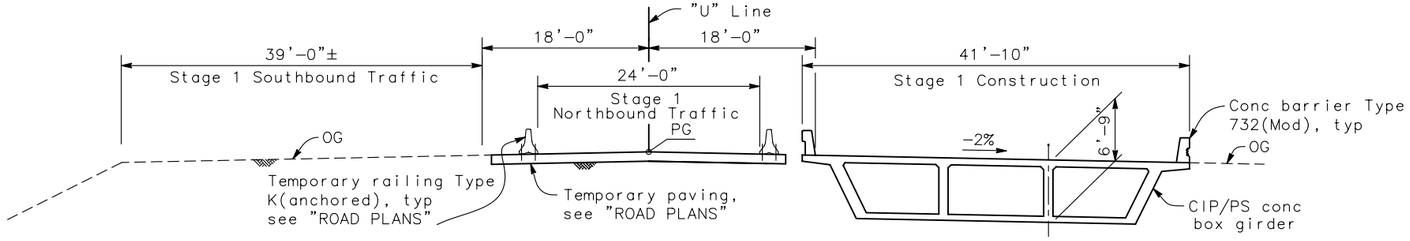


**TYPICAL SECTION (STAGE 1)**

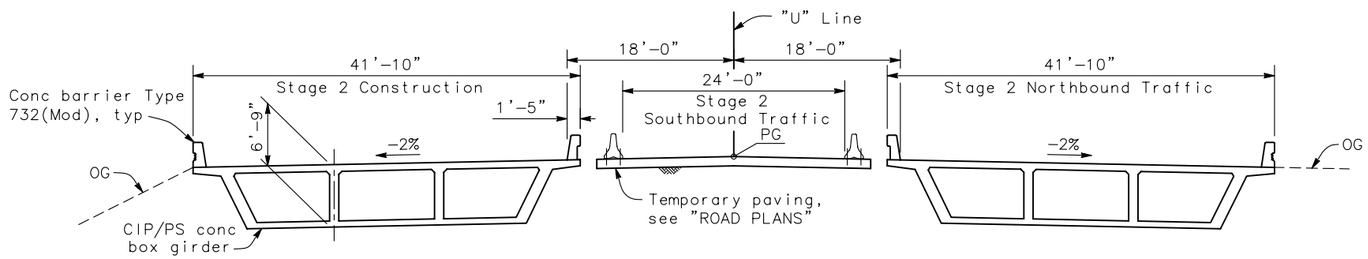


**TYPICAL SECTION (STAGE 2)**

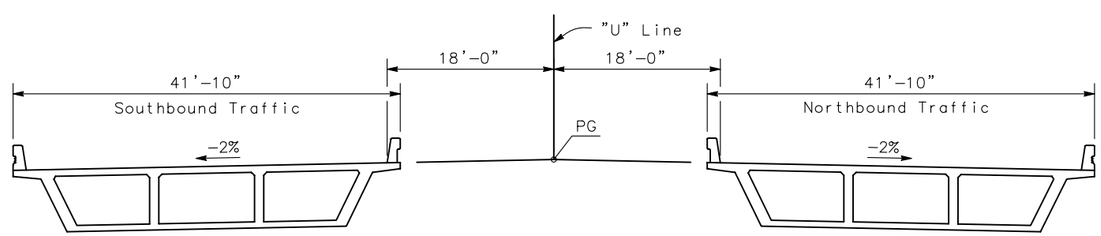


**TYPICAL SECTION (ULTIMATE)**

## STAGE CONSTRUCTION

1/8" = 1'-0"

| | | | | | | | |
|---|---|---|---|---|---|---|---|
| DESIGN OVERSIGHT | DESIGN | BY A. WANG | CHECKED P. SHINN | LRFD | LIVE LOADING: HL93 W/'LOW-BOY' AND PERMIT DESIGN VEHICLE | | |
| | DETAILS | BY W. Y. TAN | CHECKED P. SHINN | LAYOUT | BY A. WANG | CHECKED K. HARIRSAZ | |
| SIGN OFF DATE | QUANTITIES | BY A. WANG | CHECKED W. Y. TAN | SPECIFICATIONS | BY K. HARIRSAZ | PLANS AND SPECS COMPARED K. HARIRSAZ | |

DESIGN GENERAL PLAN SHEET (ENGLISH) (REV. 06/01/09)

ORIGINAL SCALE IN INCHES FOR REDUCED PLANS 0 1 2 3

PREPARED FOR THE STATE OF CALIFORNIA DEPARTMENT OF TRANSPORTATION

K. HARIRSAZ
PROJECT ENGINEER

CU 05
EA 474501

FILE => $REQUEST

BRIDGE NO. 49-0252 R/L
POST MILES 6.45

# WILLOW ROAD UNDERCROSSING

# GENERAL PLAN NO. 2

DISREGARD PRINTS BEARING EARLIER REVISION DATES

REVISION DATES (PRELIMINARY STAGE ONLY): 9/2009 1/2010 3/2010 4/2010

SHEET 2 OF 19

USERNAME => $USER DATE PLOTTED => $DATE TIME PLOTTED => $TIME

| DIST | COUNTY | ROUTE | POST MILES TOTAL PROJECT | SHEET No. | TOTAL SHEETS |
|---|---|---|---|---|---|
| 05 | SLO | 101 | 5.9/6.9 | 212 | 290 |

REGISTERED CIVIL ENGINEER DATE 4/30/10

PLANS APPROVAL DATE

REGISTERED PROFESSIONAL ENGINEER ALLEN WANG No. C 66503 Exp. 06/30/12 CIVIL STATE OF CALIFORNIA

*The State of California or its officers or agents shall not be responsible for the accuracy or completeness of electronic copies of this plan sheet.*

COUNTY OF SAN LUIS OBISPO
PUBLIC WORKS AND TRANSPORTATION DEPARTMENT
1050 MONTEREY STREET
SAN LUIS OBISPO, CA 93408

RAJAPPAN & MEYER
CONSULTING ENGINEERS, INC.
1038 LEIGH AVE, SUITE 100
SAN JOSE, CA 95126

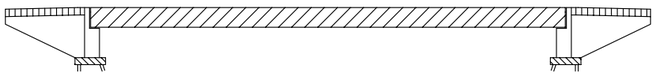


Structural Concrete, Bridge (f'c = 3600 psi @ 28 days)

Structural Concrete, Bridge (f'c = 5000 psi @ 28 days)

Structural Concrete, Bridge Footing (f'c = 3600 psi @ 28 days)

Structural Concrete, Approach Slab (f'c = 3600 psi @ 28 days)

## CONCRETE STRENGTH AND TYPE LIMITS

No Scale

## STANDARD PLANS DATED MAY, 2006

| | |
|---|---|
| A10A | Acronyms and Abbreviations (A – L) |
| A10B | Acronyms and Abbreviations (M – Z) |
| A10C | Symbols (Sheet 1 of 2) |
| A10D | Symbols (Sheet 2 of 2) |
| A62C | Limits of Payment for Excavation and Backfill – Bridge |
| RSP A85 | Chain Link Fence |
| B0-1 | Bridge Details |
| B0-5 | Bridge Details |
| B0-13 | Bridge Details |
| B2-5 | Pile Details – Class 90 and Class 140 |
| RSP B6-21 | Joint Seals (Maximum Movement Rating = 2") |
| B7-1 | Box Girder Details |
| B7-6 | Deck Drains Types D-1 and D-2 |
| B7-10 | Utility Opening – Box Girder |
| B8-5 | Cast-in-place Prestressed Girder Details |
| B11-55 | Concrete Barrier Type 732 |
| B14-3 | Communication and Sprinkler Control Conduits (Conduit Less Than 4") |
| B14-5 | Water Supply Line (Details) (Pipe Sizes Less Than 4") |

Standard Plan sheets No.

Detail No.

## GENERAL NOTES
## LOAD AND RESISTANCE FACTOR DESIGN

DESIGN: AASHTO LRFD Bridge Design Specifications, 4th edition with California Amendments except earth retaining structures other than abutments, bridge (incl. barrier and railing) details taken from Standard Plans March 2006 and earlier versions, Standard Bridge Details XS sheets, etc) are designed using Bridge Design Specifications ('96 AASHTO w/Revisions by Caltrans)

SEISMIC DESIGN:
Caltrans Seismic Design Criteria (SDC), Version 1.4 dated June, 2006

DEAD LOAD:
Includes 35 psf for future wearing surface.

LIVE LOADING:
HL93 w/ 'Low Boy' and permit design vehicle.

SEISMIC LOADING:
See "Site Specific ARS"
SDC ARS Curve for Soil Profile Type D (Mw = 6.5 ± 0.25)
(Peak Rock Acceleration = 0.7g)

SDC 1.4 Figure B.7 (A = 0.6g) with the following modifications:
(1) The base curve is obtained by multiplying the 0.6g curve data by 1.2.
(2) 20% increase of spectral accelerations (Sa) for periods > = 1 second,
(3) no change of Sa for periods < 0.5 second, and
(4) linear interpolation of Sa for periods between 0.5 and 1 second.

CONCRETE:
fy = 60 ksi
f'c = 3.6 ksi
n = 8.5

PRESTRESSED CONCRETE:
See "Prestressing Notes" on "GIRDER LAYOUT" sheet.

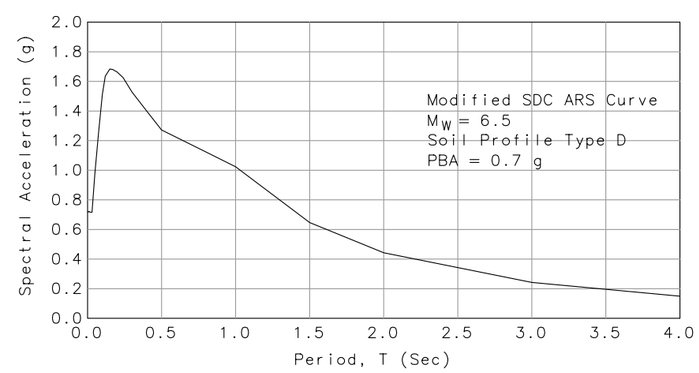


## SITE SPECIFIC ARS

## INDEX TO PLANS


| SHEET NO. | TITLE |
|---|---|
| 1 | General Plan No. 1 |
| 2 | General Plan No. 2 |
| 3 | Index To Plans |
| 4 | Deck Contours |
| 5 | Foundation Plan |
| 6 | Abutment Layout |
| 7 | Abutment Details No. 1 |
| 8 | Abutment Details No. 2 |
| 9 | Abutment Details No. 3 |
| 10 | Typical Section |
| 11 | Girder Layout |
| 12 | Girder Reinforcement |
| 13 | Architectural Treatment Details |
| 14 | Deck Drain Details |
| 15 | Structure Approach Type N (30S) |
| 16 | Structure Approach Drainage Details |
| 17 | Slope Paving – Full Slope |
| 18 | Log of Test Borings 1 of 2 |
| 19 | Log of Test Borings 2 of 2 |


PILE DATA TABLE

| Location | Pile Type | Nominal Resistance (kips) | | Design Tip Elev (ft) | Specified Tip Elev (ft) | Nominal Driving Resistance (kips) |
|---|---|---|---|---|---|---|
| | | Compression | Tension | | | |
| Abut 1 (Left Bridge) | Class 140 Alt. "W" | 280 | 0 | 305(a);326(b) | 305 | 297 |
| Abut 1 (Right Bridge) | Class 140 Alt. "W" | 280 | 0 | 305(a);326(b) | 305 | 297 |
| Abut 2 (Left Bridge) | Class 140 Alt. "W" | 280 | 0 | 305(a);326(b) | 305 | 297 |
| Abut 2 (Right Bridge) | Class 140 Alt. "W" | 280 | 0 | 305(a);326(b) | 305 | 297 |

Notes:
(1) Design tip elevations for Abutments are controlled by (a) Compression, (b) Lateral Load.
(2) Unsuitable soil layer (liquefiable) that does not contribute to the design nominal resistance exists between Elev. 331 and 334 ft. The estimate driving resistance from the unsuitable penetrated soil layer is 17 kips.

DESIGN OVERSIGHT

SIGN OFF DATE

DESIGN DETAIL SHEET (ENGLISH) (REV. 06/01/09)

| | BY | | CHECKED | |
|---|---|---|---|---|
| DESIGN | BY | A. WANG | CHECKED | P. SHINN |
| DETAILS | BY | W. Y. TAN | CHECKED | P. SHINN |
| QUANTITIES | BY | A. WANG | CHECKED | W. Y. TAN |

ORIGINAL SCALE IN INCHES FOR REDUCED PLANS 0 1 2 3

PREPARED FOR THE STATE OF CALIFORNIA DEPARTMENT OF TRANSPORTATION

K. HARIRSAZ
PROJECT ENGINEER

CU 05
EA 474501

BRIDGE NO. 49-0252 R/L
POST MILES 6.45

# WILLOW ROAD UNDERCROSSING
# INDEX TO PLANS

DISREGARD PRINTS BEARING EARLIER REVISION DATES

REVISION DATES (PRELIMINARY STAGE ONLY) 9/2009 1/2010 3/2010 4/2010

SHEET 3 OF 19

FILE => $REQUEST

USERNAME => $USER DATE PLOTTED => $DATE TIME PLOTTED => $TIME

| DIST | COUNTY | ROUTE | POST MILES TOTAL PROJECT | SHEET No. | TOTAL SHEETS |
|---|---|---|---|---|---|
| 05 | SLO | 101 | 5.9/6.9 | 213 | 290 |

Allen Wang 4/30/10
REGISTERED CIVIL ENGINEER DATE

PLANS APPROVAL DATE

REGISTERED PROFESSIONAL ENGINEER ALLEN WANG No. C 66503 Exp. 06/30/12 CIVIL STATE OF CALIFORNIA

*The State of California or its officers or agents shall not be responsible for the accuracy or completeness of electronic copies of this plan sheet.*

COUNTY OF SAN LUIS OBISPO
PUBLIC WORKS AND TRANSPORTATION DEPARTMENT
1050 MONTEREY STREET
SAN LUIS OBISPO, CA 93408

RAJAPPAN & MEYER
CONSULTING ENGINEERS, INC.
1038 LEIGH AVE, SUITE 100
SAN JOSE, CA 95126

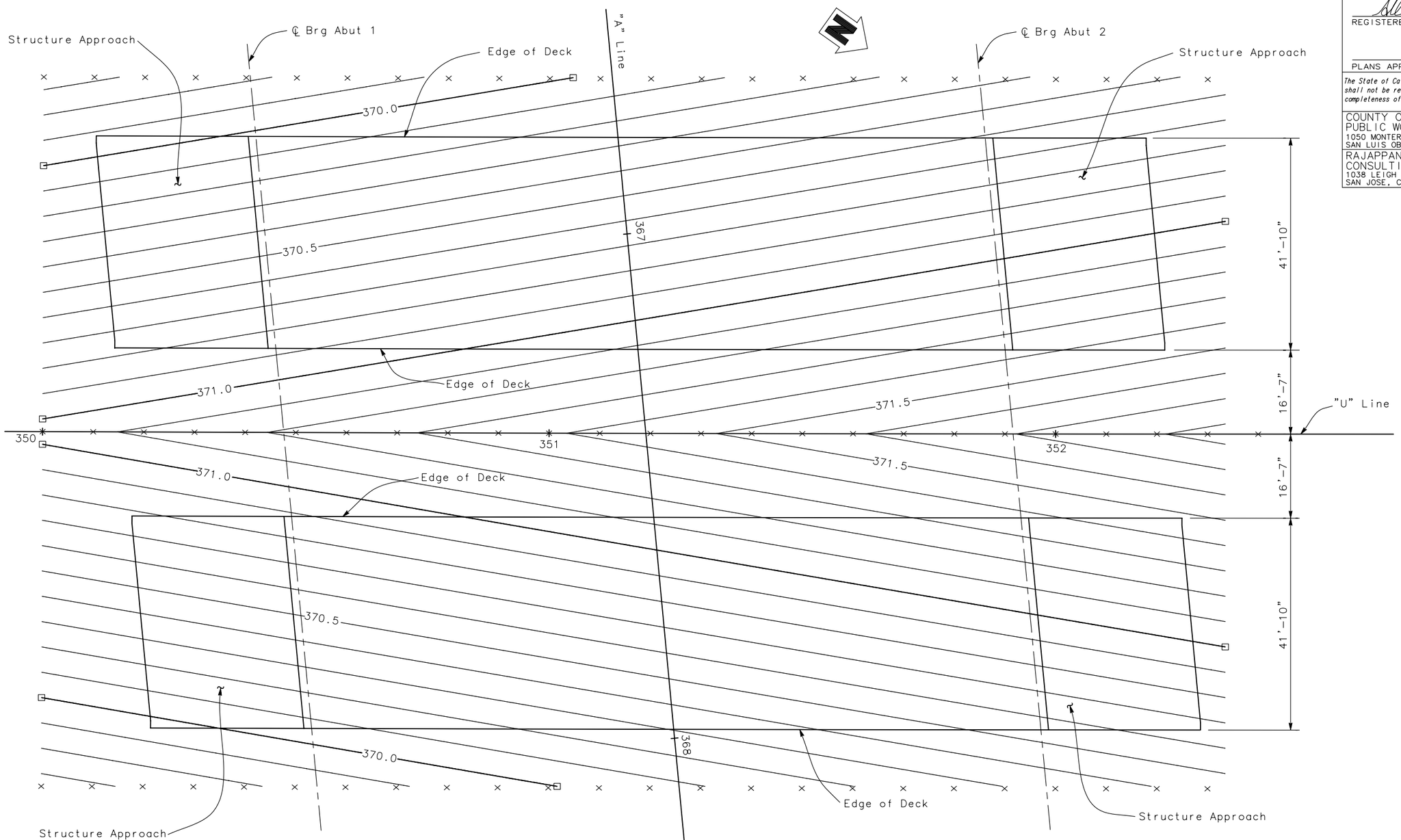


**PLAN**
1" = 10'

NOTES:

1. □ Indicates even foot contours.
2. x Indicates 10 ft intervals measured along "U" Line.
3. Contour interval = 0.1 ft.
4. Contours do not include camber or falsework settlement.

| | | | | | |
|---|---|---|---|---|---|
| DESIGN OVERSIGHT | DESIGN | BY A. WANG | CHECKED P. SHINN | PREPARED FOR THE STATE OF CALIFORNIA DEPARTMENT OF TRANSPORTATION | K. HARIRSAZ PROJECT ENGINEER |
| SIGN OFF DATE | DETAILS | BY W. Y. TAN | CHECKED P. SHINN | | |
| | QUANTITIES | BY A. WANG | CHECKED W. Y. TAN | | |

BRIDGE NO. 49-0252 R/L
POST MILES 6.45

**WILLOW ROAD UNDERCROSSING**
**DECK CONTOURS**

DESIGN DETAIL SHEET (ENGLISH) (REV. 06/01/09)

ORIGINAL SCALE IN INCHES FOR REDUCED PLANS 0 1 2 3

CU 05
EA 474501

FILE => $REQUEST

DISREGARD PRINTS BEARING EARLIER REVISION DATES

REVISION DATES (PRELIMINARY STAGE ONLY): 9/2009 1/2010 3/2010 4/2010

SHEET 4 OF 19

USERNAME => $USER DATE PLOTTED => $DATE TIME PLOTTED => $TIME

| DIST | COUNTY | ROUTE | POST MILES TOTAL PROJECT | SHEET No. | TOTAL SHEETS |
|---|---|---|---|---|---|
| 05 | SLO | 101 | 5.9/6.9 | 214 | 290 |

REGISTERED CIVIL ENGINEER DATE 4/30/10

PLANS APPROVAL DATE

*The State of California or its officers or agents shall not be responsible for the accuracy or completeness of electronic copies of this plan sheet.*

REGISTERED PROFESSIONAL ENGINEER ALLEN WANG No. C 66503 Exp. 06/30/12 CIVIL STATE OF CALIFORNIA

COUNTY OF SAN LUIS OBISPO
PUBLIC WORKS AND TRANSPORTATION DEPARTMENT
1050 MONTEREY STREET
SAN LUIS OBISPO, CA 93408

RAJAPPAN & MEYER
CONSULTING ENGINEERS, INC.
1038 LEIGH AVE, SUITE 100
SAN JOSE, CA 95126

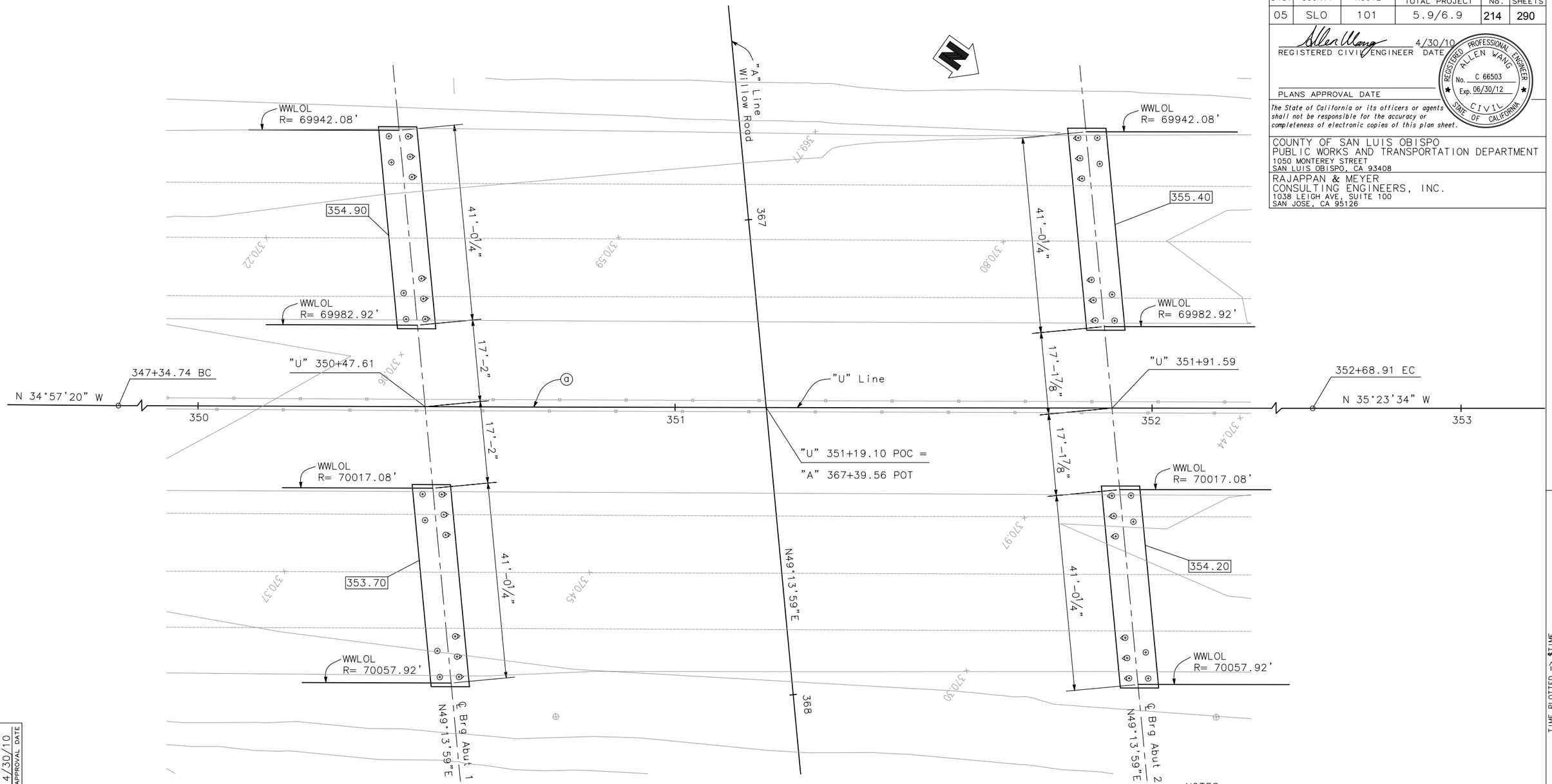


## BENCH MARK AND DATUM

| Monument | Coordinates | | Elev | Caltrans Description/Location |
|---|---|---|---|---|
| | Northing | Easting | | |
| SLO101 43-22 | 2215412.498 | 5813426.021 | 367.78 | Std C/L Ref Mon, stamped 43-22, 345+67.616=347+34.74 Meas. |
| SLO101 43-23 | 2215848.846 | 5813118.433 | 369.68 | Std C/L Ref Mon, stamped 43-23, 352+68.91 EC 1955 C/L 352+68.30 Meas. |

## PLAN

1" = 10'

CURVE DATA

| CURVE NO. | R | Δ | T | L |
|---|---|---|---|---|
| ⓐ | 70,000.00' | 0°26'14" | 267.09' | 534.17' |

NOTES:

1. Contractor shall verify all existing utility locations before construction
2. ⊕ Indicates pile. Not all piles shown
3. ○ N xx.xxx / E yy.yyy Indicates Northing and Easting
4. X.XX Indicates bottom of footing elevation
5. x 8.6 Indicates spot elevation

GEOTECHNICAL PROFESSIONAL APPROVAL DATE 4/30/10

DESIGN OVERSIGHT

SIGN OFF DATE

SCALE: AS SHOWN | VERT.DATUM: NAVD88 | HORZ.DATUM: NAD83 (92)
PHOTOGRAMMETRY AS OF: JUNE 13, 2003 | ALIGNMENT TIES
SURVEYED BY RRM DESIGN GROUP | DRAFTED BY GOLDEN STATE AERIAL SURVEYS
FIELD CHECKED BY N. PASQUINI | CHECKED BY S. WEBSTER

DESIGN BY A. WANG CHECKED P. SHINN
DETAILS BY W. Y. TAN CHECKED P. SHINN
QUANTITIES BY A. WANG CHECKED W. Y. TAN

PREPARED FOR THE STATE OF CALIFORNIA DEPARTMENT OF TRANSPORTATION

K. HARIRSAZ
PROJECT ENGINEER

BRIDGE NO. 49-0252 R/L
POST MILES 6.45

# WILLOW ROAD UNDERCROSSING
# FOUNDATION PLAN

FOUNDATION PLAN SHEET (ENGLISH) (REV. 06/01/09)

ORIGINAL SCALE IN INCHES FOR REDUCED PLANS 0 1 2 3

CU 05
EA 474501

FILE => $REQUEST

DISREGARD PRINTS BEARING EARLIER REVISION DATES

REVISION DATES (PRELIMINARY STAGE ONLY) 9/2009 1/2010 3/2010 4/2010

SHEET 5 OF 19

USERNAME => $USER DATE PLOTTED => $DATE TIME PLOTTED => $TIME

| DIST | COUNTY | ROUTE | POST MILES TOTAL PROJECT | SHEET No. | TOTAL SHEETS |
|---|---|---|---|---|---|
| 05 | SLO | 101 | 5.9/6.9 | 215 | 290 |

REGISTERED CIVIL ENGINEER DATE 4/30/10

PLANS APPROVAL DATE

REGISTERED PROFESSIONAL ENGINEER ALLEN WANG No. C 66503 Exp. 06/30/12 CIVIL STATE OF CALIFORNIA

*The State of California or its officers or agents shall not be responsible for the accuracy or completeness of electronic copies of this plan sheet.*

COUNTY OF SAN LUIS OBISPO
PUBLIC WORKS AND TRANSPORTATION DEPARTMENT
1050 MONTEREY STREET
SAN LUIS OBISPO, CA 93408

RAJAPPAN & MEYER
CONSULTING ENGINEERS, INC.
1038 LEIGH AVE, SUITE 100
SAN JOSE, CA 95126

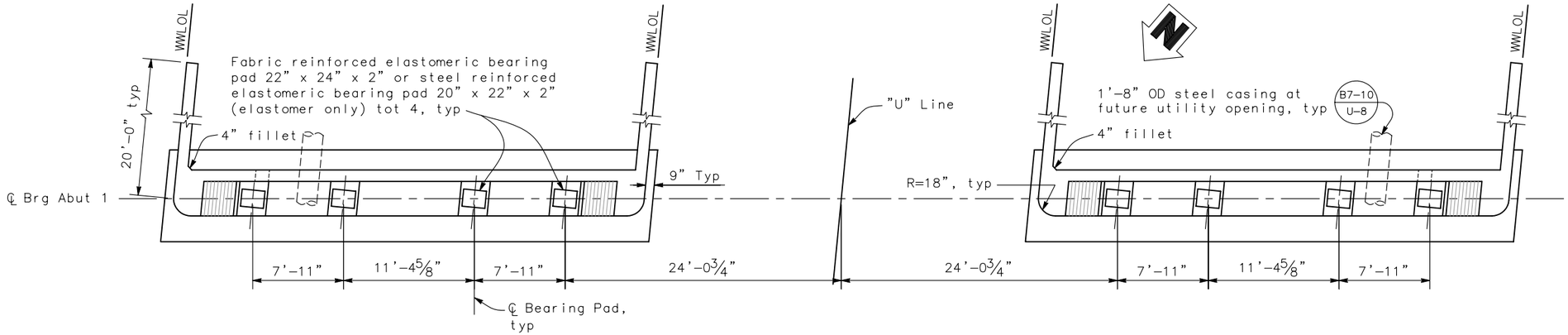


## PLAN

3/16" = 1'-0"
(Abutment 1 shown, Abutment 2 similar)

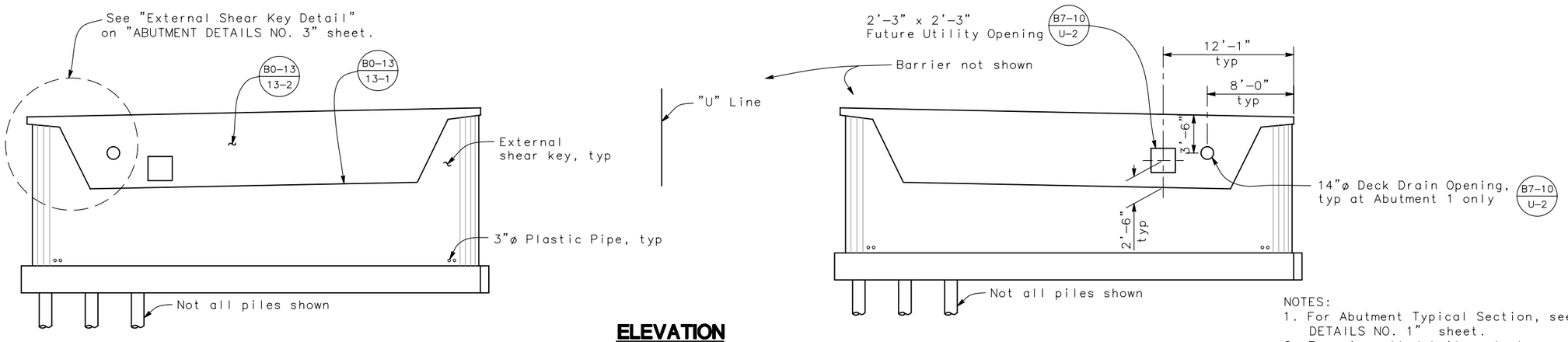


## ELEVATION

3/16" = 1'-0"
(Abutment 1 shown, Abutment 2 similar)

NOTES:
1. For Abutment Typical Section, see "ABUTMENT DETAILS NO. 1" sheet.
2. For wingwall details not shown, see "Section A-A" and "Wingwall Elevation" on "ABUTMENT DETAILS NO. 2" sheet.
3. Apply Anti-Graffiti Coating on exposed surface of Abutments and wingwalls.

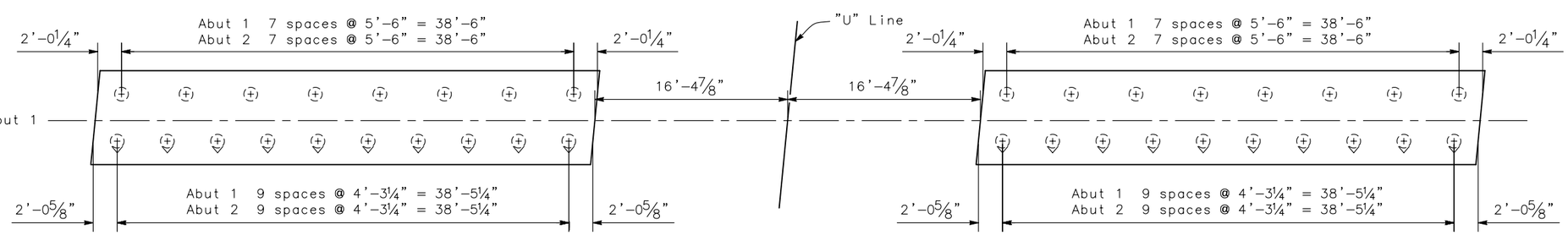


LEGEND:
⊕ Indicates Vertical Pile
⊕ Indicates Battered Pile 1:3

## PILE LAYOUT

3/16" = 1'-0"
(Abutment 1 shown, Abutment 2 similar)

| | | | |
|---|---|---|---|
| DESIGN | BY A. WANG | CHECKED P. SHINN | |
| DETAILS | BY W. Y. TAN | CHECKED P. SHINN | |
| QUANTITIES | BY A. WANG | CHECKED W. Y. TAN | |

DESIGN OVERSIGHT

SIGN OFF DATE

DESIGN DETAIL SHEET (ENGLISH) (REV. 06/01/09)

ORIGINAL SCALE IN INCHES FOR REDUCED PLANS 0 1 2 3

PREPARED FOR THE STATE OF CALIFORNIA DEPARTMENT OF TRANSPORTATION

K. HARIRSAZ
PROJECT ENGINEER

CU 05
EA 474501

FILE => $REQUEST

BRIDGE NO. 49-0252 R/L
POST MILES 6.45

# WILLOW ROAD UNDERCROSSING
# ABUTMENT LAYOUT

DISREGARD PRINTS BEARING EARLIER REVISION DATES

REVISION DATES (PRELIMINARY STAGE ONLY) 9/2009 1/2010 3/2010 4/2010

SHEET 6 OF 19

USERNAME => $USER DATE PLOTTED => $DATE TIME PLOTTED => $TIME

| DIST | COUNTY | ROUTE | POST MILES TOTAL PROJECT | SHEET No. | TOTAL SHEETS |
|---|---|---|---|---|---|
| 05 | SLO | 101 | 5.9/6.9 | 216 | 290 |

REGISTERED CIVIL ENGINEER DATE 4/30/10

PLANS APPROVAL DATE

REGISTERED PROFESSIONAL ENGINEER ALLEN WANG No. C 66503 Exp. 06/30/12 CIVIL STATE OF CALIFORNIA

*The State of California or its officers or agents shall not be responsible for the accuracy or completeness of electronic copies of this plan sheet.*

COUNTY OF SAN LUIS OBISPO
PUBLIC WORKS AND TRANSPORTATION DEPARTMENT
1050 MONTEREY STREET
SAN LUIS OBISPO, CA 93408

RAJAPPAN & MEYER
CONSULTING ENGINEERS, INC.
1038 LEIGH AVE, SUITE 100
SAN JOSE, CA 95126

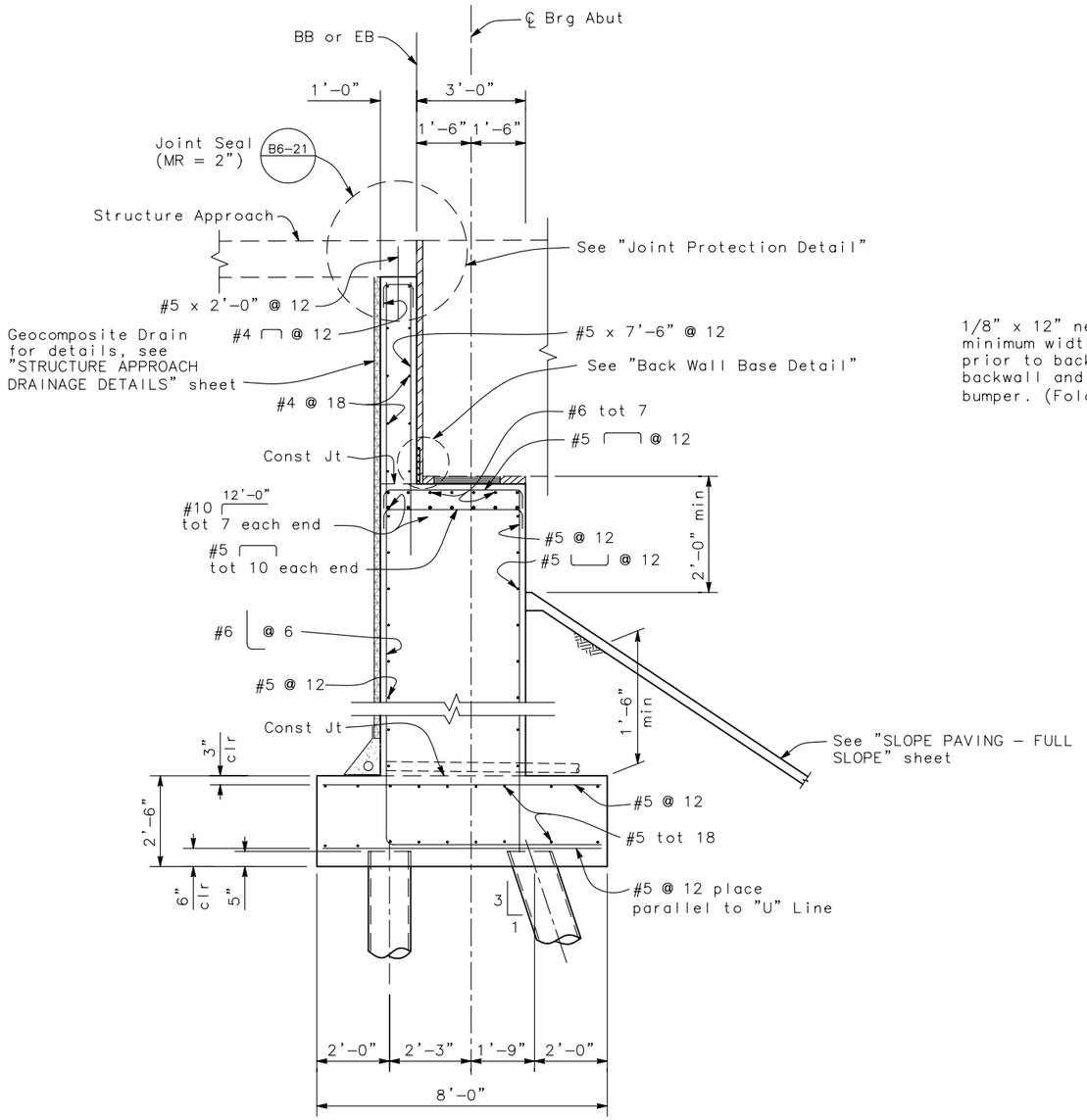


## TYPICAL SECTION B2-5

1/2" = 1'-0"

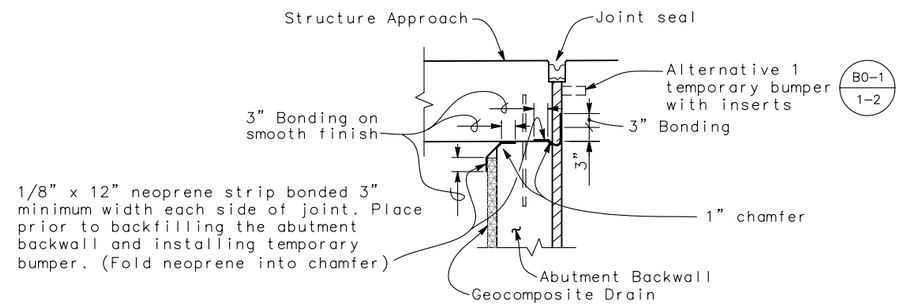


## JOINT PROTECTION DETAIL

No Scale

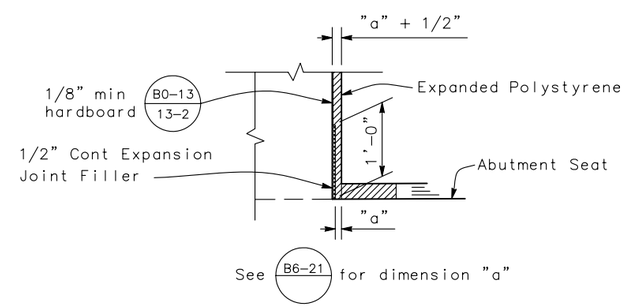


## BACKWALL BASE DETAIL

No Scale

| | | | | | |
|---|---|---|---|---|---|
| DESIGN OVERSIGHT | DESIGN | BY A. WANG | CHECKED P. SHINN | PREPARED FOR THE STATE OF CALIFORNIA DEPARTMENT OF TRANSPORTATION | K. HARIRSAZ PROJECT ENGINEER |
| SIGN OFF DATE | DETAILS | BY W. Y. TAN | CHECKED P. SHINN | | |
| | QUANTITIES | BY A. WANG | CHECKED W. Y. TAN | | |

BRIDGE NO. 49-0252 R/L
POST MILES 6.45

# WILLOW ROAD UNDERCROSSING
# ABUTMENT DETAILS NO. 1

DESIGN DETAIL SHEET (ENGLISH) (REV. 06/01/09)

ORIGINAL SCALE IN INCHES FOR REDUCED PLANS 0 1 2 3

CU 05
EA 474501

FILE => $REQUEST

DISREGARD PRINTS BEARING EARLIER REVISION DATES

REVISION DATES (PRELIMINARY STAGE ONLY): 9/2009 1/2010 3/2010 4/2010

SHEET 7 OF 19

USERNAME => $USER DATE PLOTTED => $DATE TIME PLOTTED => $TIME

| DIST | COUNTY | ROUTE | POST MILES TOTAL PROJECT | SHEET No. | TOTAL SHEETS |
|---|---|---|---|---|---|
| 05 | SLO | 101 | 5.9/6.9 | 217 | 290 |

REGISTERED CIVIL ENGINEER DATE 4/30/10

PLANS APPROVAL DATE

REGISTERED PROFESSIONAL ENGINEER ALLEN WANG No. C 66503 Exp. 06/30/12 CIVIL STATE OF CALIFORNIA

*The State of California or its officers or agents shall not be responsible for the accuracy or completeness of electronic copies of this plan sheet.*

COUNTY OF SAN LUIS OBISPO
PUBLIC WORKS AND TRANSPORTATION DEPARTMENT
1050 MONTEREY STREET
SAN LUIS OBISPO, CA 93408

RAJAPPAN & MEYER
CONSULTING ENGINEERS, INC.
1038 LEIGH AVE, SUITE 100
SAN JOSE, CA 95126

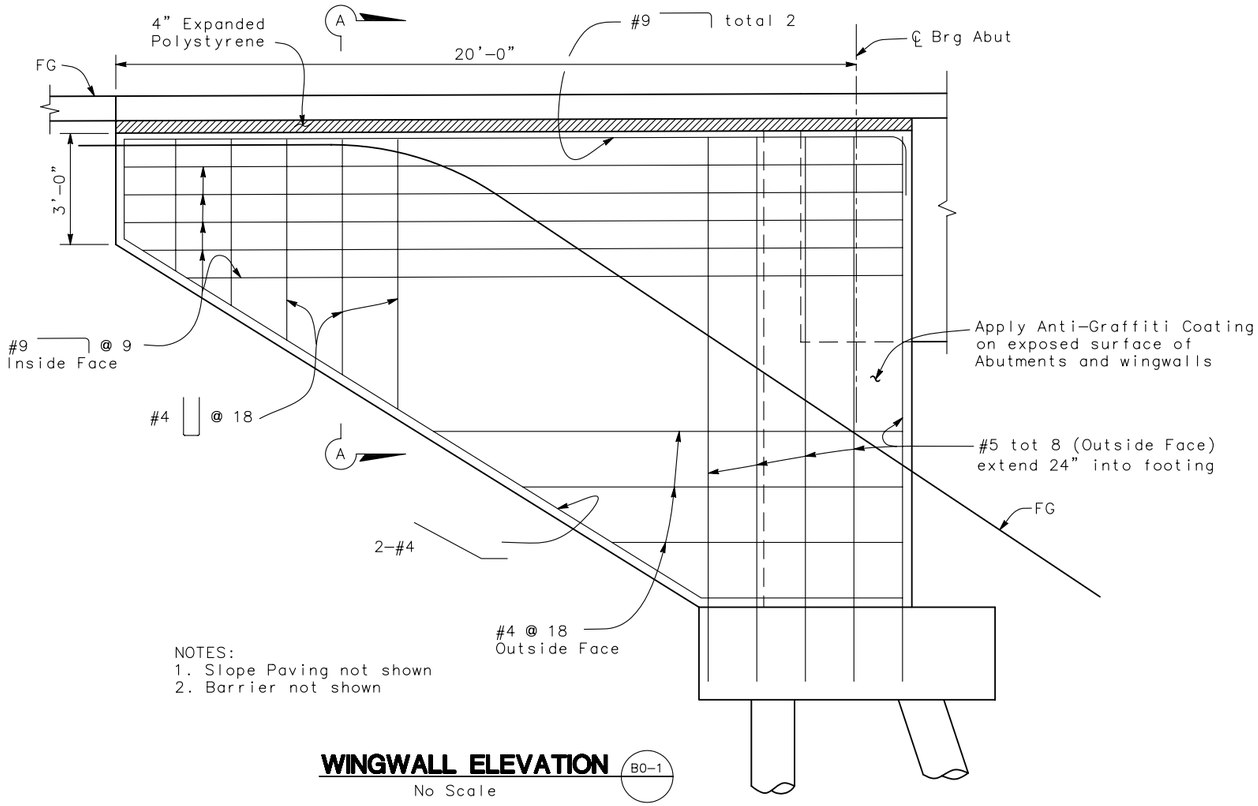


NOTES:
1. Slope Paving not shown
2. Barrier not shown

## WINGWALL ELEVATION (B0-1)

No Scale

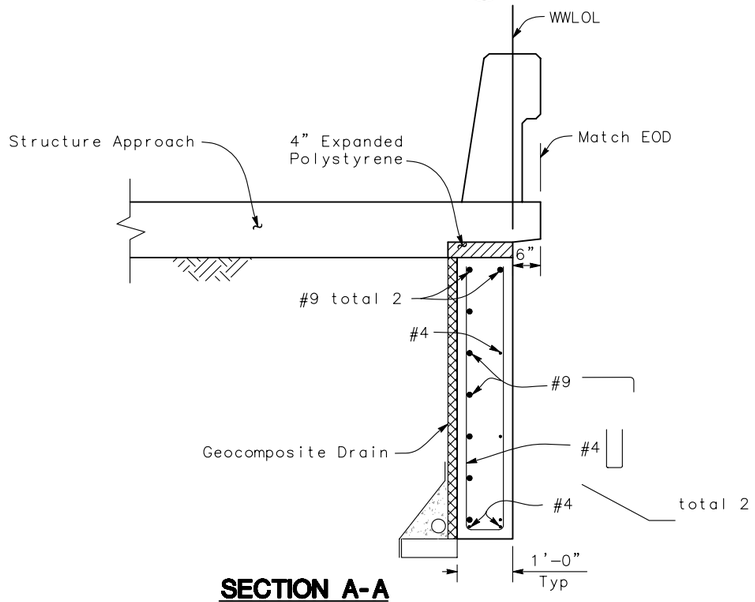


## SECTION A-A

3/4" = 1'-0"

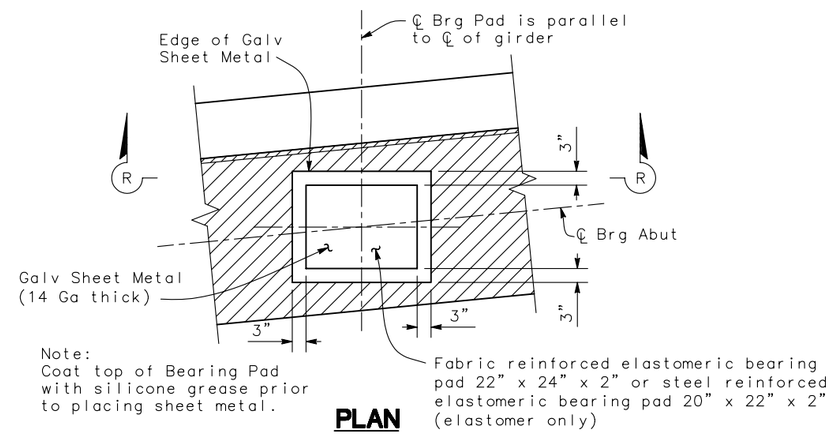


Note:
Coat top of Bearing Pad with silicone grease prior to placing sheet metal.

## PLAN

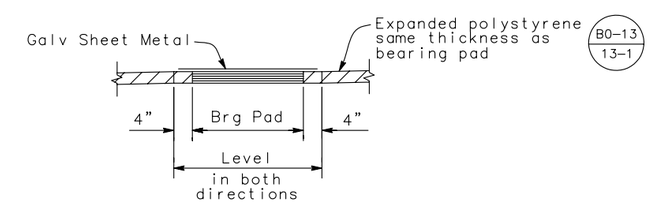


## SECTION R-R

## BEARING PAD DETAIL

3/4" = 1'-0"
(Details typical at all bearing pads)

| | | | |
|---|---|---|---|
| DESIGN | BY A. WANG | CHECKED P. SHINN | |
| DETAILS | BY W. Y. TAN | CHECKED P. SHINN | |
| QUANTITIES | BY A. WANG | CHECKED W. Y. TAN | |

DESIGN OVERSIGHT

SIGN OFF DATE

DESIGN DETAIL SHEET (ENGLISH) (REV. 06/01/09)

PREPARED FOR THE STATE OF CALIFORNIA DEPARTMENT OF TRANSPORTATION

ORIGINAL SCALE IN INCHES FOR REDUCED PLANS 0 1 2 3

K. HARIRSAZ
PROJECT ENGINEER

CU 05
EA 474501

FILE => $REQUEST

BRIDGE NO. 49-0252 R/L
POST MILES 6.45

# WILLOW ROAD UNDERCROSSING

# ABUTMENT DETAILS NO. 2

DISREGARD PRINTS BEARING EARLIER REVISION DATES

REVISION DATES (PRELIMINARY STAGE ONLY) 9/2009 1/2010 3/2010 4/2010

SHEET 8 OF 19

USERNAME => $USER DATE PLOTTED => $DATE TIME PLOTTED => $TIME

| DIST | COUNTY | ROUTE | POST MILES TOTAL PROJECT | SHEET No. | TOTAL SHEETS |
|---|---|---|---|---|---|
| 05 | SLO | 101 | 5.9/6.9 | 218 | 290 |

REGISTERED CIVIL ENGINEER DATE 4/30/10

PLANS APPROVAL DATE

REGISTERED PROFESSIONAL ENGINEER ALLEN WANG No. C 66503 Exp. 06/30/12 CIVIL STATE OF CALIFORNIA

*The State of California or its officers or agents shall not be responsible for the accuracy or completeness of electronic copies of this plan sheet.*

COUNTY OF SAN LUIS OBISPO
PUBLIC WORKS AND TRANSPORTATION DEPARTMENT
1050 MONTEREY STREET
SAN LUIS OBISPO, CA 93408

RAJAPPAN & MEYER
CONSULTING ENGINEERS, INC.
1038 LEIGH AVE, SUITE 100
SAN JOSE, CA 95126

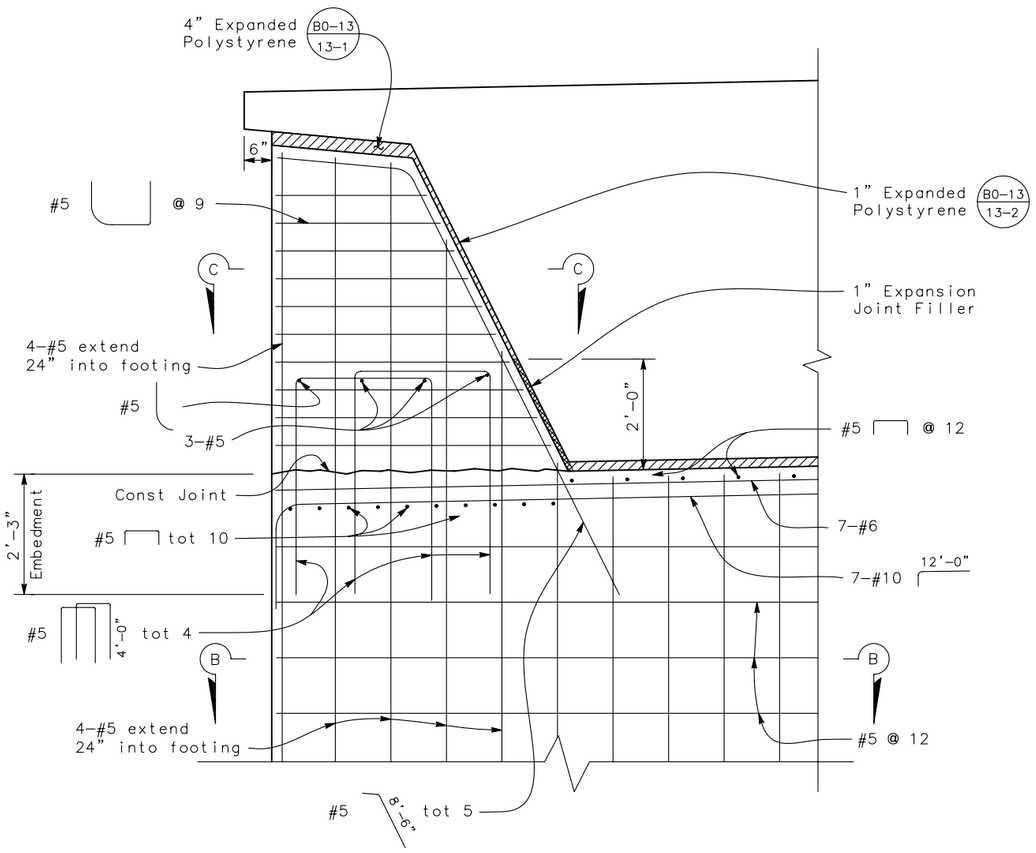


## EXTERNAL SHEAR KEY DETAIL
3/4" = 1'-0"

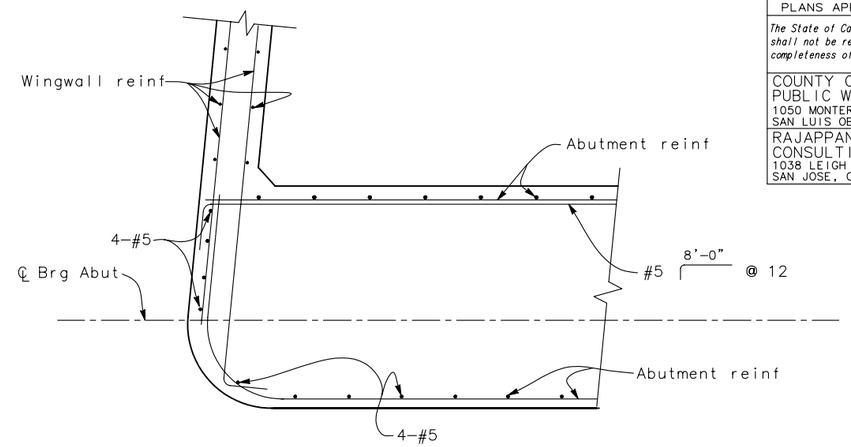


## SECTION B-B
3/4" = 1'-0"

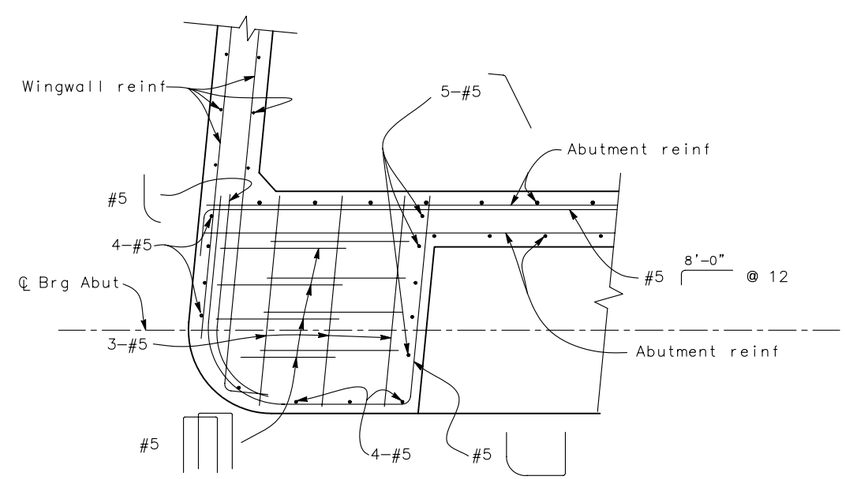


## SECTION C-C
3/4" = 1'-0"

| | | | | | |
|---|---|---|---|---|---|
| DESIGN OVERSIGHT | DESIGN | BY A. WANG | CHECKED P. SHINN | PREPARED FOR THE STATE OF CALIFORNIA DEPARTMENT OF TRANSPORTATION | K. HARIRSAZ PROJECT ENGINEER |
| SIGN OFF DATE | DETAILS | BY W. Y. TAN | CHECKED P. SHINN | | |
| | QUANTITIES | BY A. WANG | CHECKED W. Y. TAN | | |

BRIDGE NO. 49-0252 R/L
POST MILES 6.45

# WILLOW ROAD UNDERCROSSING
# ABUTMENT DETAILS NO. 3

DESIGN DETAIL SHEET (ENGLISH) (REV. 06/01/09)

ORIGINAL SCALE IN INCHES FOR REDUCED PLANS 0 1 2 3

CU 05
EA 474501

DISREGARD PRINTS BEARING EARLIER REVISION DATES 9/2009 1/2010 3/2010 4/2010

REVISION DATES (PRELIMINARY STAGE ONLY)

SHEET 9 OF 19

FILE => $REQUEST

USERNAME => $USER DATE PLOTTED => $DATE TIME PLOTTED => $TIME

| DIST | COUNTY | ROUTE | POST MILES TOTAL PROJECT | SHEET No. | TOTAL SHEETS |
|---|---|---|---|---|---|
| 05 | SLO | 101 | 5.9/6.9 | 219 | 290 |

REGISTERED CIVIL ENGINEER DATE 4/30/10

PLANS APPROVAL DATE

REGISTERED PROFESSIONAL ENGINEER ALLEN WANG No. C 66503 Exp. 06/30/12 CIVIL STATE OF CALIFORNIA

*The State of California or its officers or agents shall not be responsible for the accuracy or completeness of electronic copies of this plan sheet.*

COUNTY OF SAN LUIS OBISPO
PUBLIC WORKS AND TRANSPORTATION DEPARTMENT
1050 MONTEREY STREET
SAN LUIS OBISPO, CA 93408

RAJAPPAN & MEYER
CONSULTING ENGINEERS, INC.
1038 LEIGH AVE, SUITE 100
SAN JOSE, CA 95126

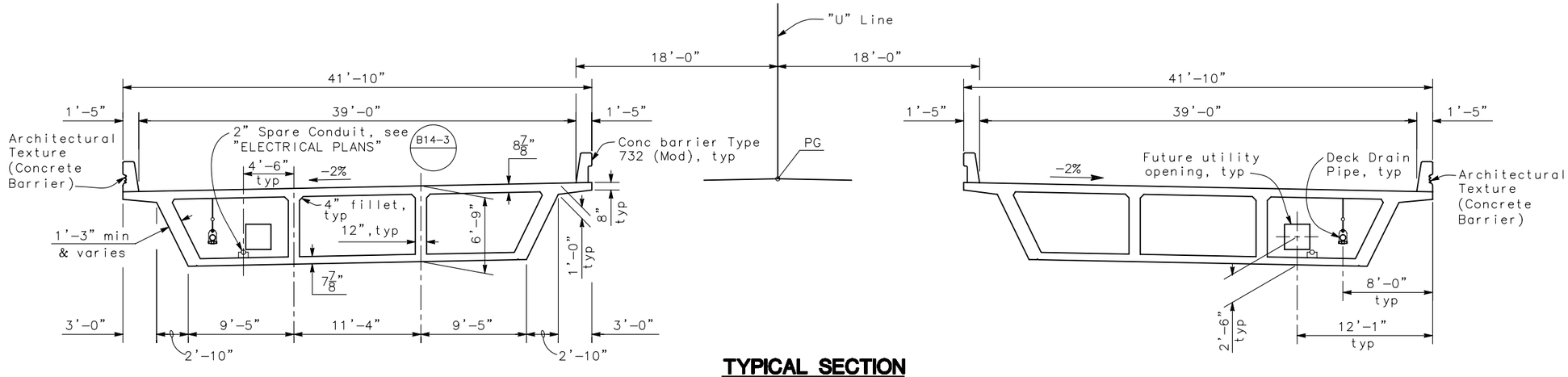


**TYPICAL SECTION**
3/16" = 1'-0"

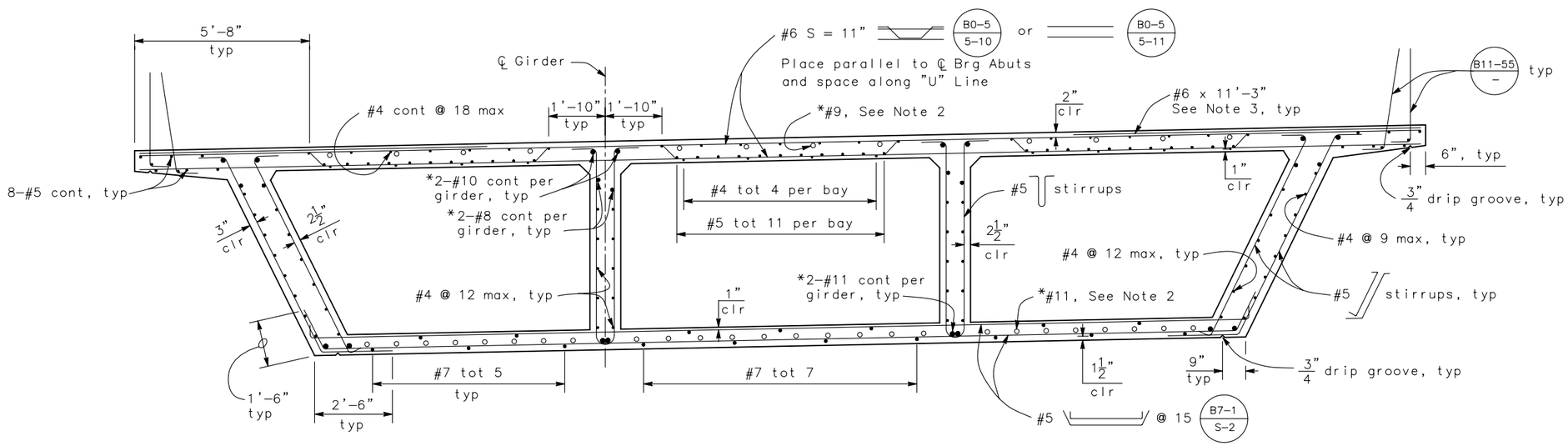


Notes:
1. Left structure shown, right structure similar
2. For additional slab longitudinal reinforcement, see "GIRDER REINFORCEMENT" sheet
3. Additional #6 x 11'-3" bar shall be placed in the overhang corner and bundled with each alternative top transverse bar in the overhang. See "Girder Layout" detail on "GIRDER LAYOUT" sheet
4. * Indicate bars to receive service splices

**TYPICAL SECTION** B0-5 B7-1 B8-5
1/2" = 1'-0"

| | | | |
|---|---|---|---|
| DESIGN | BY A. WANG | CHECKED P. SHINN | |
| DETAILS | BY W. Y. TAN | CHECKED P. SHINN | |
| QUANTITIES | BY A. WANG | CHECKED W. Y. TAN | |

DESIGN OVERSIGHT

SIGN OFF DATE

DESIGN DETAIL SHEET (ENGLISH) (REV. 06/01/09)

ORIGINAL SCALE IN INCHES FOR REDUCED PLANS 0 1 2 3

PREPARED FOR THE STATE OF CALIFORNIA DEPARTMENT OF TRANSPORTATION

K. HARIRSAZ
PROJECT ENGINEER

CU 05
EA 474501

FILE => $REQUEST

BRIDGE NO. 49-0252 R/L
POST MILES 6.45

# WILLOW ROAD UNDERCROSSING
## TYPICAL SECTION

DISREGARD PRINTS BEARING EARLIER REVISION DATES

REVISION DATES (PRELIMINARY STAGE ONLY) 9/2009 1/2010 3/2010 4/2010

SHEET 10 OF 19

USERNAME => $USER DATE PLOTTED => $DATE TIME PLOTTED => $TIME

| DIST | COUNTY | ROUTE | POST MILES TOTAL PROJECT | SHEET No. | TOTAL SHEETS |
|---|---|---|---|---|---|
| 05 | SLO | 101 | 5.9/6.9 | 220 | 290 |

REGISTERED CIVIL ENGINEER DATE 4/30/10

PLANS APPROVAL DATE

REGISTERED PROFESSIONAL ENGINEER ALLEN WANG No. C 66503 Exp. 06/30/12 CIVIL STATE OF CALIFORNIA

*The State of California or its officers or agents shall not be responsible for the accuracy or completeness of electronic copies of this plan sheet.*

COUNTY OF SAN LUIS OBISPO
PUBLIC WORKS AND TRANSPORTATION DEPARTMENT
1050 MONTEREY STREET
SAN LUIS OBISPO, CA 93408

RAJAPPAN & MEYER
CONSULTING ENGINEERS, INC.
1038 LEIGH AVE, SUITE 100
SAN JOSE, CA 95126

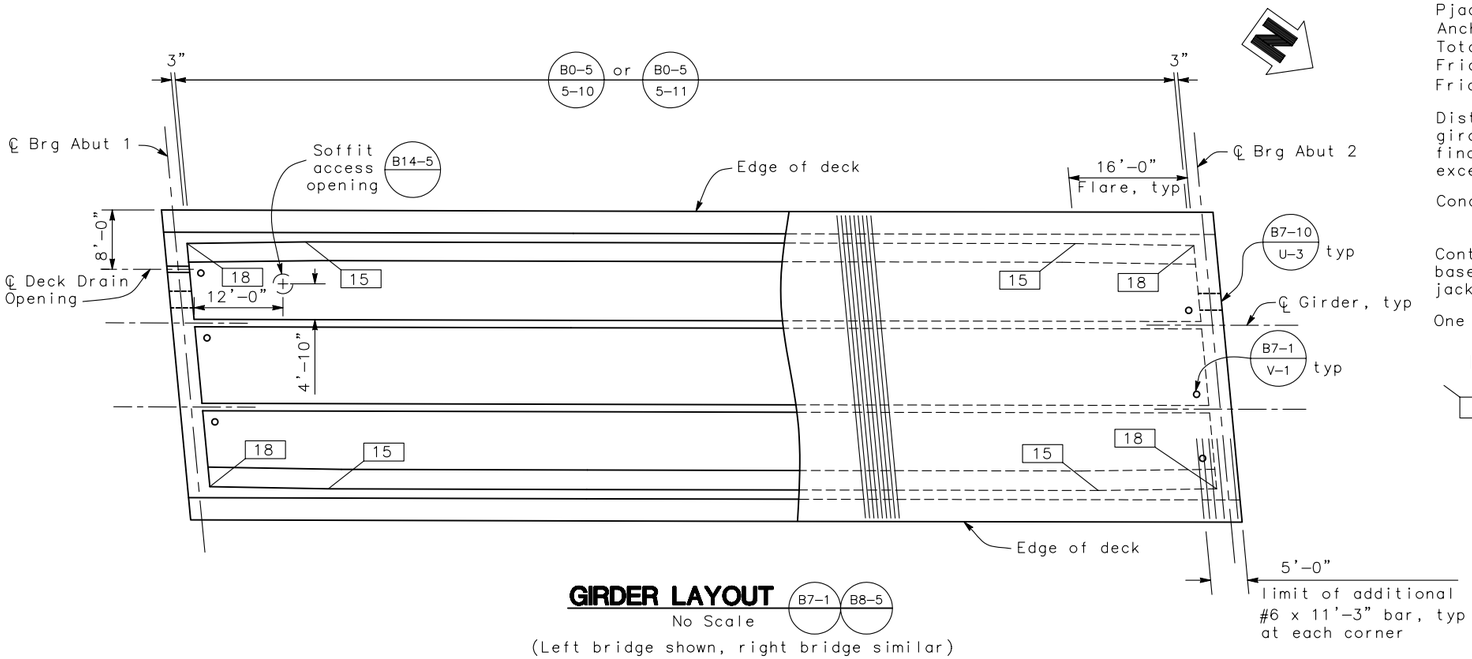


## GIRDER LAYOUT (B7-1 / B8-5)

No Scale

(Left bridge shown, right bridge similar)

PRESTRESSING NOTES:

270 ksi Low Relaxation Strand :
Pjack = 12400 kips
Anchor Set = 3/8"
Total Number of Girders = 4
Friction curvature coefficient $\mu$ = 0.15 (1/rad)
Friction wobble coefficient K = 0.0002 (1/ft)

Distribution of prestress force (Pjack) between girders shall not exceed the ratio of 3:2. Maximum final force variation between girders shall not exceed 725 kips

Concrete: f'c = 5000 psi @ 28 days
f'ci = 4000 psi @ time of stressing

Contractor shall submit elongation calculations based on initial stress at ⊠ equal to 0.956 times jacking stress.

One end stressing shall be performed from Abutment 1.

⊠ Indicates point of no movement

Indicates girder width in inches
Girder stem width = 12" unless otherwise noted

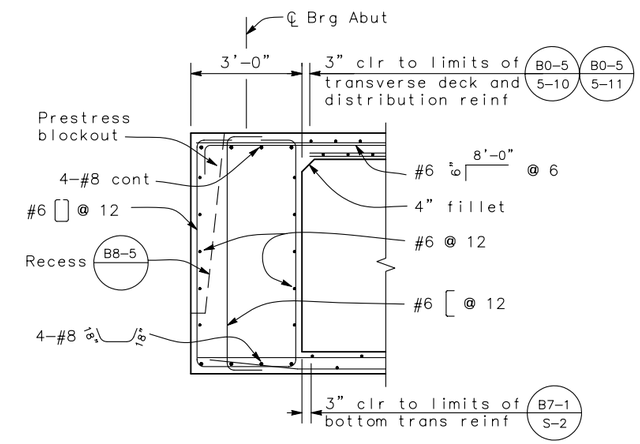


## END DIAPHRAGM (B8-5)

No Scale

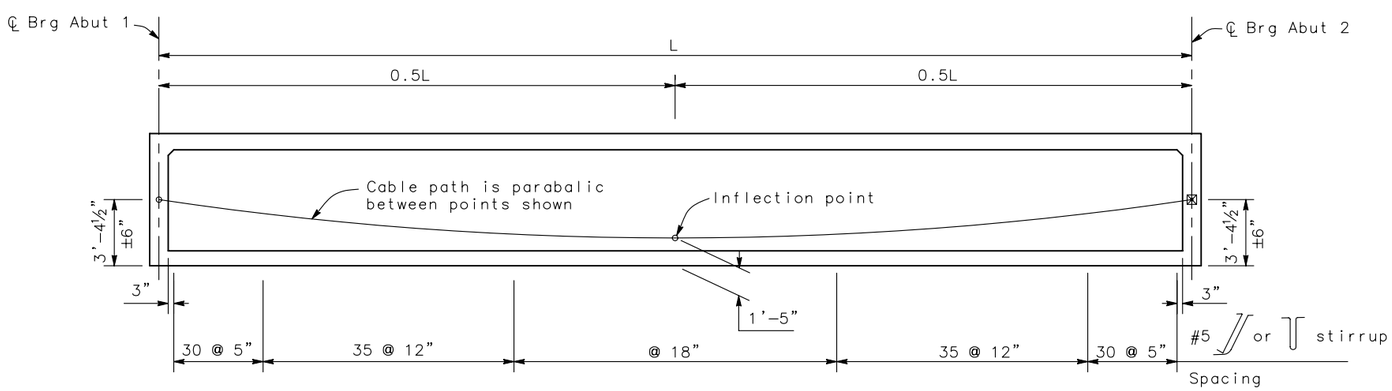


## LONGITUDINAL SECTION

No Scale

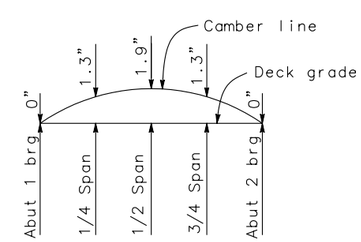


## CAMBER DIAGRAM

No Scale

(Does not include allowance for falsework settlement)

| | | | | | |
|---|---|---|---|---|---|
| DESIGN OVERSIGHT | DESIGN | BY A. WANG | CHECKED P. SHINN | PREPARED FOR THE STATE OF CALIFORNIA DEPARTMENT OF TRANSPORTATION | K. HARIRSAZ PROJECT ENGINEER |
| SIGN OFF DATE | DETAILS | BY W. Y. TAN | CHECKED P. SHINN | | |
| | QUANTITIES | BY A. WANG | CHECKED W. Y. TAN | | |

BRIDGE NO. 49-0252 R/L
POST MILES 6.45

# WILLOW ROAD UNDERCROSSING
# GIRDER LAYOUT

DESIGN DETAIL SHEET (ENGLISH) (REV. 06/01/09)

ORIGINAL SCALE IN INCHES FOR REDUCED PLANS 0 1 2 3

CU 05
EA 474501

FILE => $REQUEST

DISREGARD PRINTS BEARING EARLIER REVISION DATES

REVISION DATES (PRELIMINARY STAGE ONLY) 9/2009 1/2010 3/2010 4/2010

SHEET 11 OF 19

USERNAME => $USER DATE PLOTTED => $DATE TIME PLOTTED => $TIME

| DIST | COUNTY | ROUTE | POST MILES TOTAL PROJECT | SHEET No. | TOTAL SHEETS |
|---|---|---|---|---|---|
| 05 | SLO | 101 | 5.9/6.9 | 221 | 290 |

REGISTERED CIVIL ENGINEER DATE 4/30/10

PLANS APPROVAL DATE

REGISTERED PROFESSIONAL ENGINEER ALLEN WANG No. C 66503 Exp. 06/30/12 CIVIL STATE OF CALIFORNIA

*The State of California or its officers or agents shall not be responsible for the accuracy or completeness of electronic copies of this plan sheet.*

COUNTY OF SAN LUIS OBISPO
PUBLIC WORKS AND TRANSPORTATION DEPARTMENT
1050 MONTEREY STREET
SAN LUIS OBISPO, CA 93408

RAJAPPAN & MEYER
CONSULTING ENGINEERS, INC.
1038 LEIGH AVE, SUITE 100
SAN JOSE, CA 95126

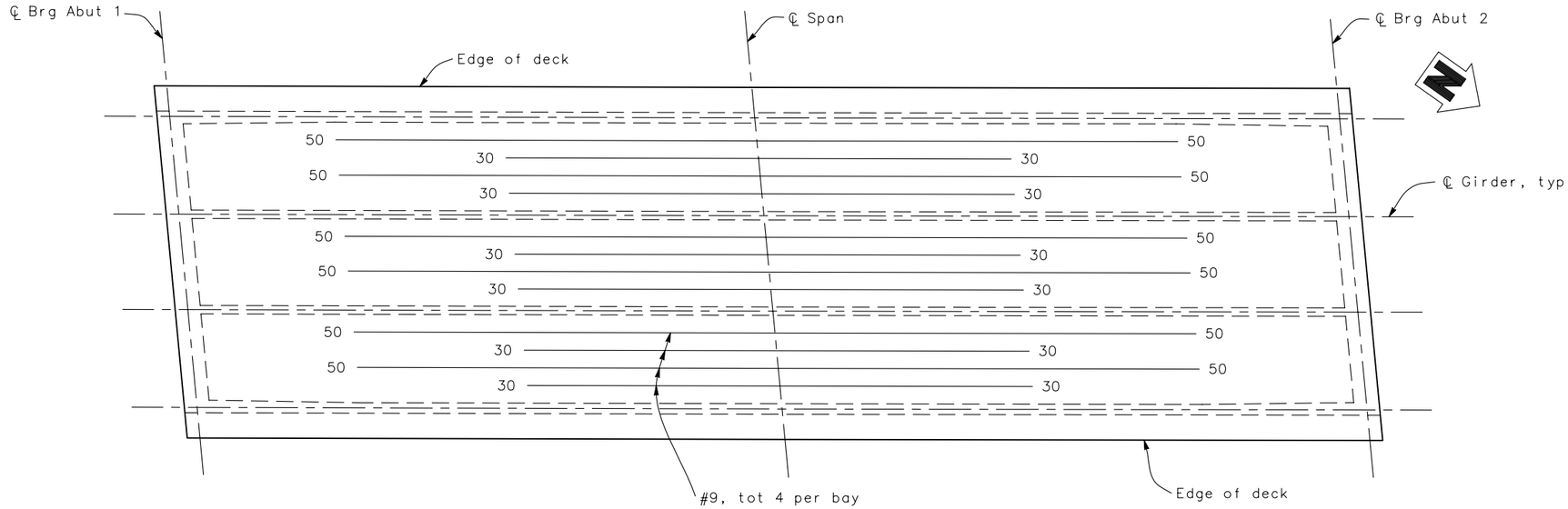


## ADDITIONAL TOP SLAB REINFORCEMENT

No Scale
(Left bridge shown, right bridge similar)

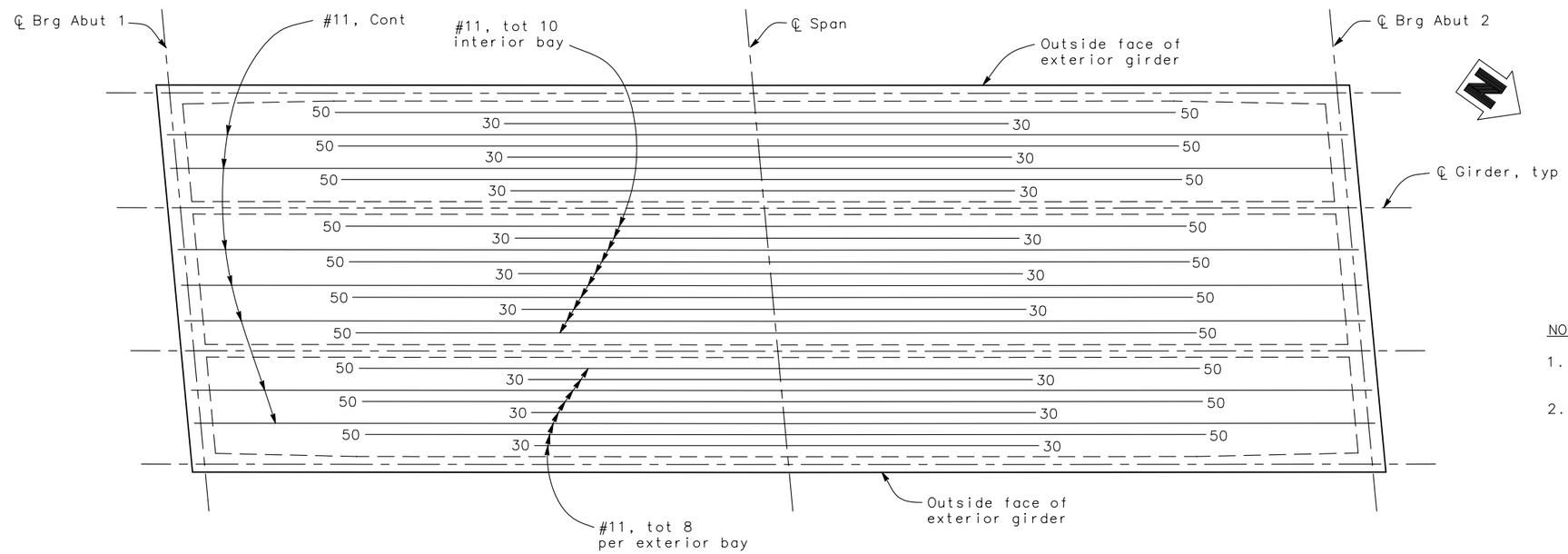


## ADDITIONAL BOTTOM SLAB REINFORCEMENT

No Scale
(Left bridge shown, right bridge similar)

NOTES:

1. Splices in additional top and bottom slab reinforcement shown shall be service splices.
2. Numbers at ends of bars indicate distance in feet from ℄ Span.

| | | | |
|---|---|---|---|
| DESIGN | BY A. WANG | CHECKED P. SHINN | |
| DETAILS | BY W. Y. TAN | CHECKED P. SHINN | |
| QUANTITIES | BY A. WANG | CHECKED W. Y. TAN | |

DESIGN OVERSIGHT

SIGN OFF DATE

DESIGN DETAIL SHEET (ENGLISH) (REV. 06/01/09)

ORIGINAL SCALE IN INCHES FOR REDUCED PLANS 0 1 2 3

PREPARED FOR THE STATE OF CALIFORNIA DEPARTMENT OF TRANSPORTATION

K. HARIRSAZ
PROJECT ENGINEER

CU 05
EA 474501

FILE => $REQUEST

BRIDGE NO. 49-0252 R/L
POST MILES 6.45

# WILLOW ROAD UNDERCROSSING
# GIRDER REINFORCEMENT

DISREGARD PRINTS BEARING EARLIER REVISION DATES

REVISION DATES (PRELIMINARY STAGE ONLY) 9/2009 1/2010 3/2010 4/2010

SHEET 12 OF 19

USERNAME => $USER DATE PLOTTED => $DATE TIME PLOTTED => $TIME

| DIST | COUNTY | ROUTE | POST MILES TOTAL PROJECT | SHEET No. | TOTAL SHEETS |
|---|---|---|---|---|---|
| 05 | SLO | 101 | 5.9/6.9 | 222 | 290 |

REGISTERED CIVIL ENGINEER DATE 4/30/10

PLANS APPROVAL DATE

REGISTERED PROFESSIONAL ENGINEER ALLEN WANG No. C 66503 Exp. 06/30/12 CIVIL STATE OF CALIFORNIA

*The State of California or its officers or agents shall not be responsible for the accuracy or completeness of electronic copies of this plan sheet.*

COUNTY OF SAN LUIS OBISPO
PUBLIC WORKS AND TRANSPORTATION DEPARTMENT
1050 MONTEREY STREET
SAN LUIS OBISPO, CA 93408

RAJAPPAN & MEYER
CONSULTING ENGINEERS, INC.
1038 LEIGH AVE, SUITE 100
SAN JOSE, CA 95126

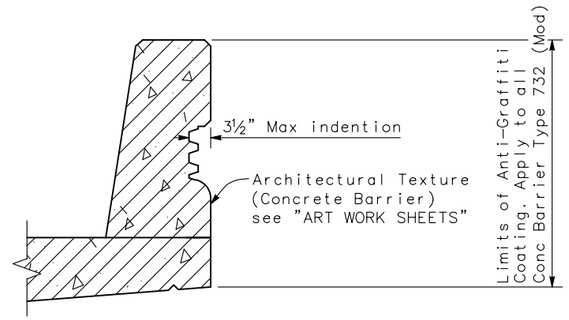


**SECTION D-D**
1" = 1'-0"

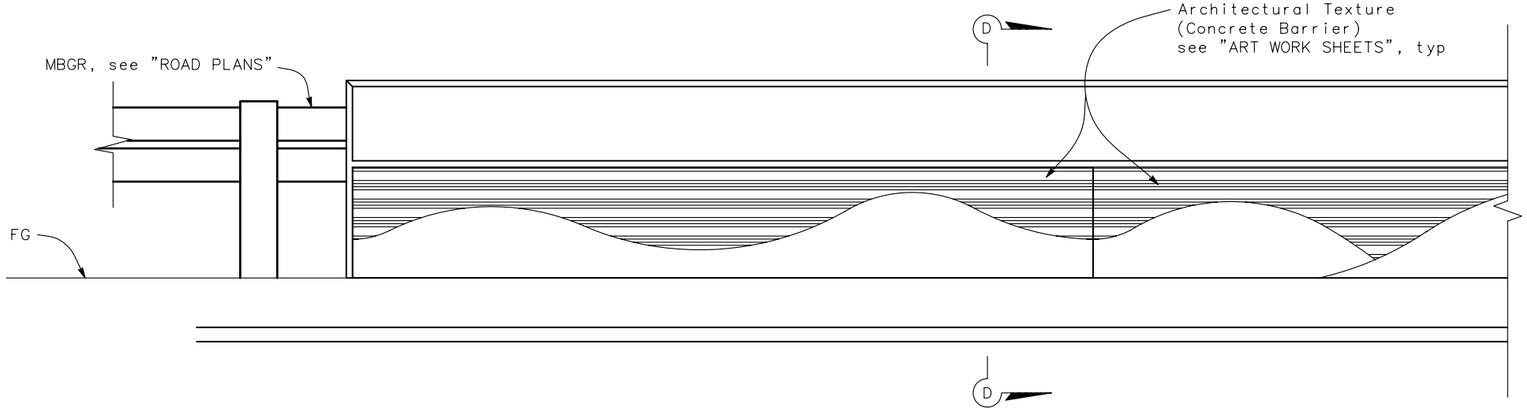


**ELEVATION**
1" = 1'-0"

**CONCRETE BARRIER TYPE 732 (MOD)** B11-55 –

| | | | | | |
|---|---|---|---|---|---|
| DESIGN OVERSIGHT | DESIGN | BY A. WANG | CHECKED P. SHINN | PREPARED FOR THE STATE OF CALIFORNIA DEPARTMENT OF TRANSPORTATION | K. HARIRSAZ PROJECT ENGINEER |
| SIGN OFF DATE | DETAILS | BY W. Y. TAN | CHECKED P. SHINN | | |
| | QUANTITIES | BY A. WANG | CHECKED W. Y. TAN | | |

BRIDGE NO. 49-0252 R/L
POST MILES 6.45

**WILLOW ROAD UNDERCROSSING**
**ARCHITECTURAL TREATMENT DETAILS**

DESIGN DETAIL SHEET (ENGLISH) (REV. 06/01/09)

ORIGINAL SCALE IN INCHES FOR REDUCED PLANS 0 1 2 3

CU 05
EA 474501

FILE => $REQUEST

DISREGARD PRINTS BEARING EARLIER REVISION DATES

REVISION DATES (PRELIMINARY STAGE ONLY) 9/2009 1/2010 3/2010 4/2010

SHEET 13 OF 19

USERNAME => $USER DATE PLOTTED => $DATE TIME PLOTTED => $TIME

| DIST | COUNTY | ROUTE | POST MILES TOTAL PROJECT | SHEET No. | TOTAL SHEETS |
|---|---|---|---|---|---|
| 05 | SLO | 101 | 5.9/6.9 | 223 | 290 |

REGISTERED CIVIL ENGINEER DATE 4/30/10

PLANS APPROVAL DATE

REGISTERED PROFESSIONAL ENGINEER ALLEN WANG No. C 66503 Exp. 06/30/12 CIVIL STATE OF CALIFORNIA

*The State of California or its officers or agents shall not be responsible for the accuracy or completeness of electronic copies of this plan sheet.*

COUNTY OF SAN LUIS OBISPO
PUBLIC WORKS AND TRANSPORTATION DEPARTMENT
1050 MONTEREY STREET
SAN LUIS OBISPO, CA 93408

RAJAPPAN & MEYER
CONSULTING ENGINEERS, INC.
1038 LEIGH AVE, SUITE 100
SAN JOSE, CA 95126

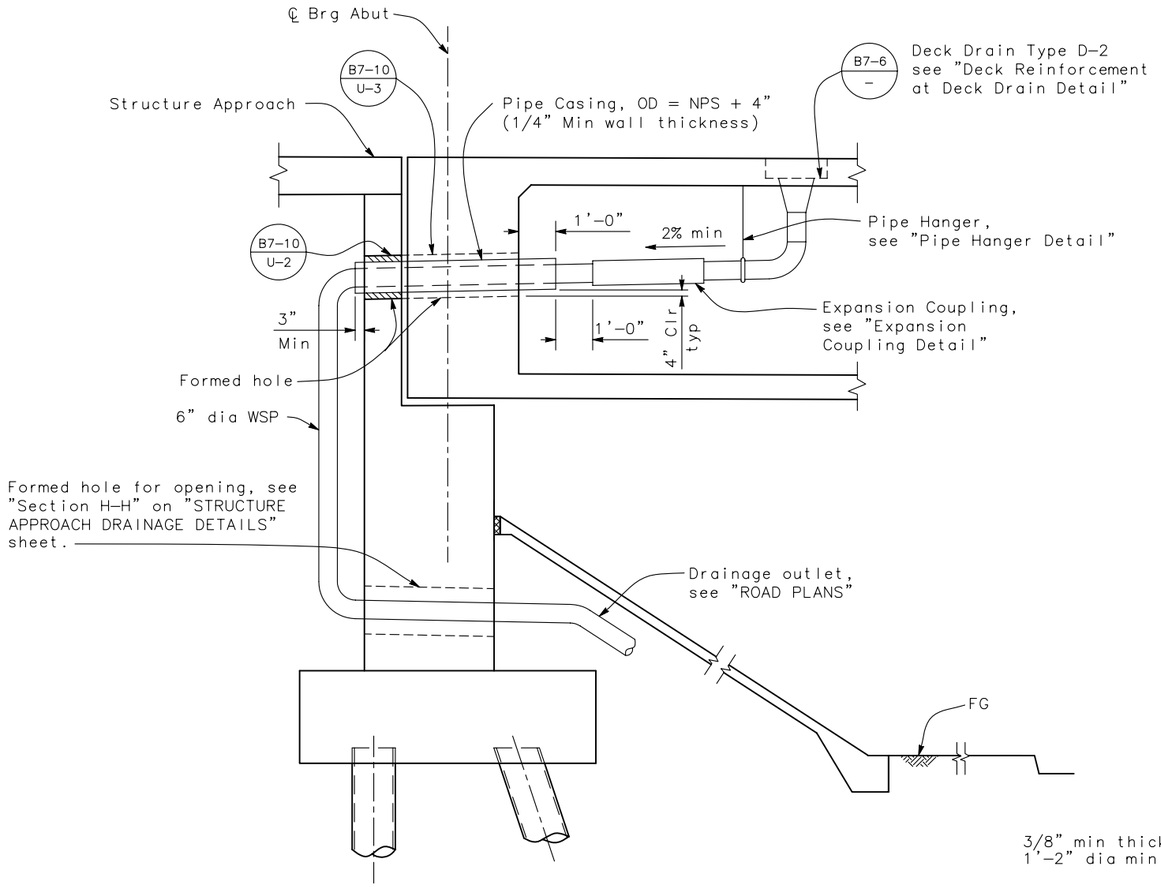


## DECK DRAIN PIPE DETAIL AT ABUTMENT 1

No Scale

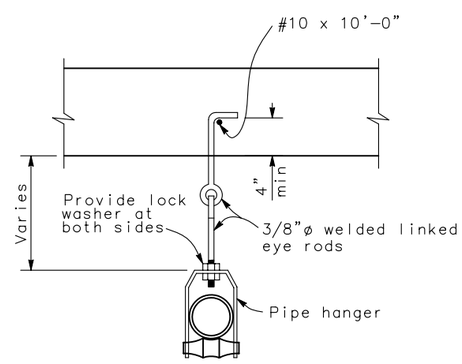


## PIPE HANGER DETAIL

No Scale

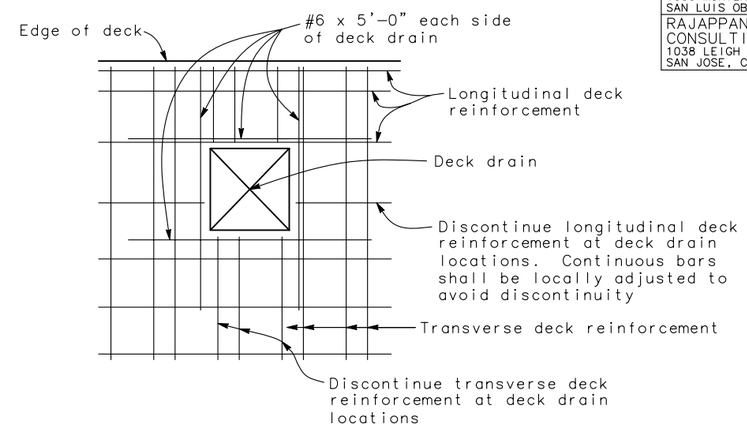


## DECK REINFORCEMENT AT DECK DRAIN DETAIL

No Scale

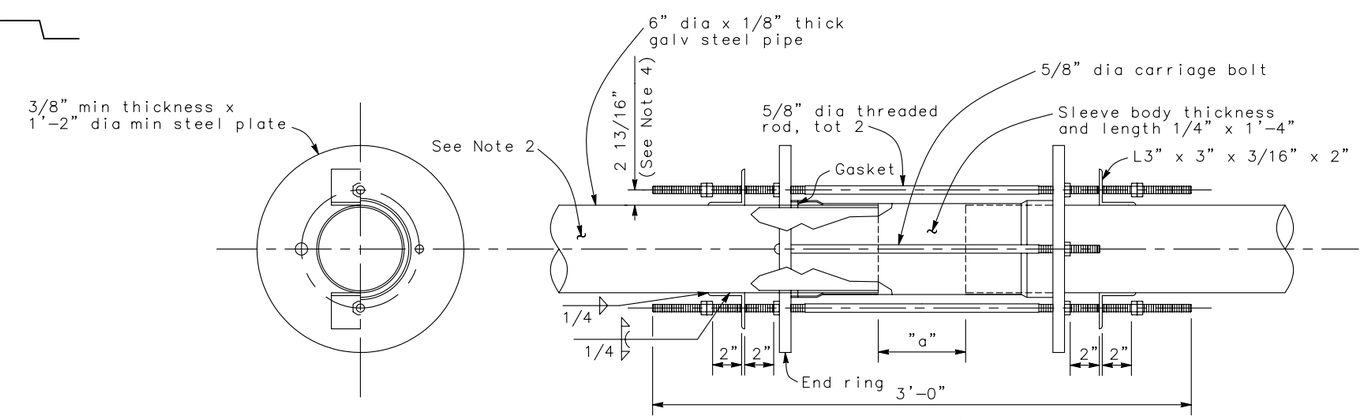


## SECTION

No Scale

## ELEVATION

No Scale

## EXPANSION COUPLING DETAIL

No Scale

NOTES:

1. All hardware to be galvanized.
2. For "a" dimension, see "ABUTMENT DETAILS NO. 1" sheet.
3. Expansion coupling with 4 bolts shown. Coupling with a greater number of bolts allowed.
4. Adjust dimension to suit coupler end ring bolt circle.

DESIGN OVERSIGHT

SIGN OFF DATE

DESIGN DETAIL SHEET (ENGLISH) (REV. 06/01/09)

| | BY | CHECKED |
|---|---|---|
| DESIGN | A. WANG | P. SHINN |
| DETAILS | W. Y. TAN | P. SHINN |
| QUANTITIES | A. WANG | W. Y. TAN |

ORIGINAL SCALE IN INCHES FOR REDUCED PLANS 0 1 2 3

PREPARED FOR THE STATE OF CALIFORNIA DEPARTMENT OF TRANSPORTATION

K. HARIRSAZ
PROJECT ENGINEER

CU 05
EA 474501

FILE => $REQUEST

BRIDGE NO. 49-0252 R/L

POST MILES 6.45

# WILLOW ROAD UNDERCROSSING

# DECK DRAIN DETAILS

DISREGARD PRINTS BEARING EARLIER REVISION DATES

REVISION DATES (PRELIMINARY STAGE ONLY): 9/2009 1/2010 3/2010 4/2010

SHEET 14 OF 19

USERNAME => $USER DATE PLOTTED => $DATE TIME PLOTTED => $TIME

| DIST | COUNTY | ROUTE | MILE POST TOTAL PROJECT | SHEET NO. | TOTAL SHEETS |
|---|---|---|---|---|---|
| 05 | SLO | 101 | 5.8/6.9 | 224 | 290 |

REGISTERED CIVIL ENGINEER 4/30/10

PLANS APPROVAL DATE

REGISTERED PROFESSIONAL ENGINEER ALLEN WANG No. C 66503 Exp. 06/30/12 CIVIL STATE OF CALIFORNIA

The State of California or its officers or agents shall not be responsible for the accuracy or completeness of electronic copies of this plan sheet.

COUNTY OF SAN LUIS OBISPO
PUBLIC WORKS AND TRANSPORTATION DEPARTMENT
1050 MONTEREY STREET
SAN LUIS OBISPO, CA 93408

RAJAPPAN & MEYER
CONSULTING ENGINEERS, INC.
1038 LEIGH AVE, SUITE 100
SAN JOSE, CA 95126

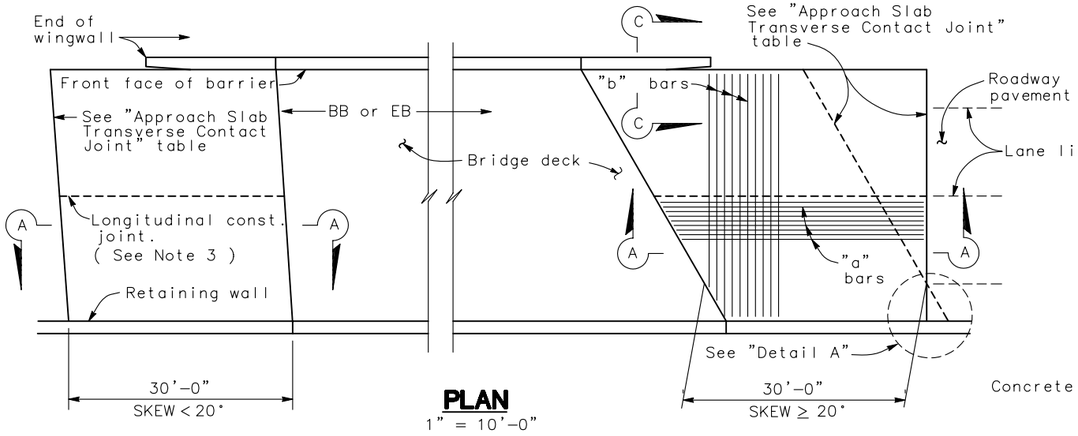


## PLAN
1" = 10'-0"

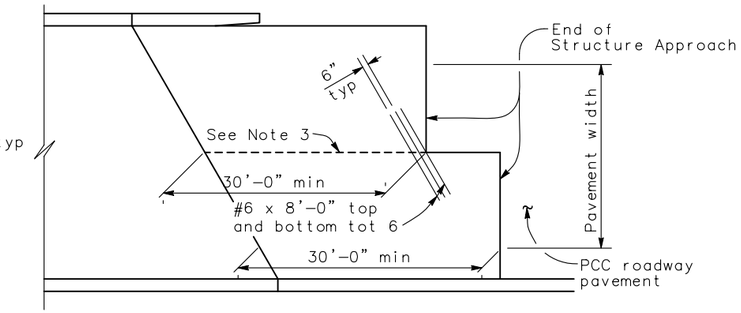


## STRUCTURE APPROACH - END STAGGER DETAIL
No Scale

| APPROACH SLAB TRANSVERSE CONTACT JOINT | | |
|---|---|---|
| APPROACH SKEW | WITH AC ROADWAY PAVEMENT | WITH PCC ROADWAY PAVEMENT |
| < 20° | Parallel to face of paving notch | Parallel to face of paving notch |
| 20° – 45° | Parallel to face of P N use (Detail A) | Stagger lines 24' to 36' apart. |
| > 45° | Parallel to face of P N use (Detail A) | Stagger at each lane line. |

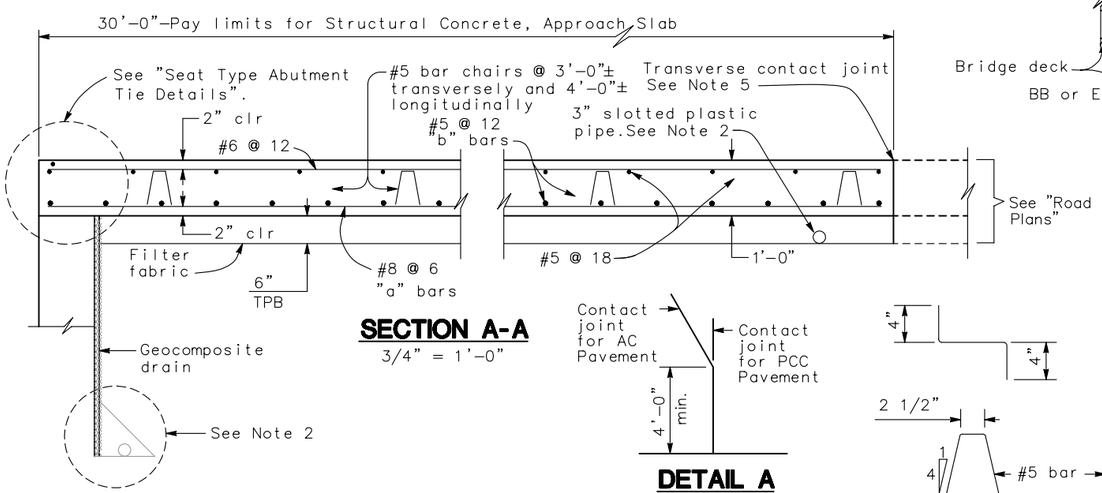


## SECTION A-A
3/4" = 1'-0"

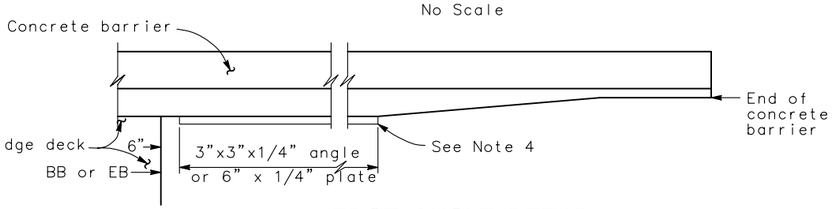


## EDGE ANGLE DETAIL
1/2" = 1'-0"

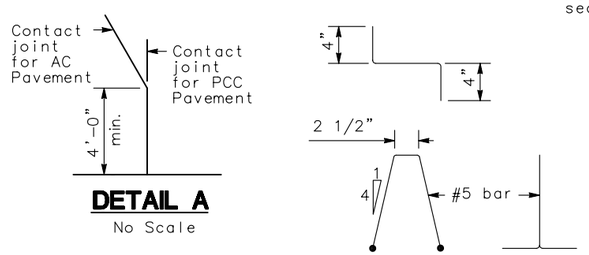


## DETAIL A
No Scale

## BAR CHAIR DETAIL
1 1/2" = 1'-0"

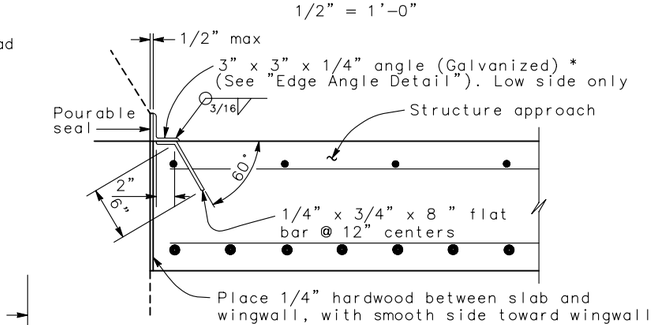


* (TO BE USED WITH TYPE 25 OR TYPE 27 CONCRETE BARRIER)

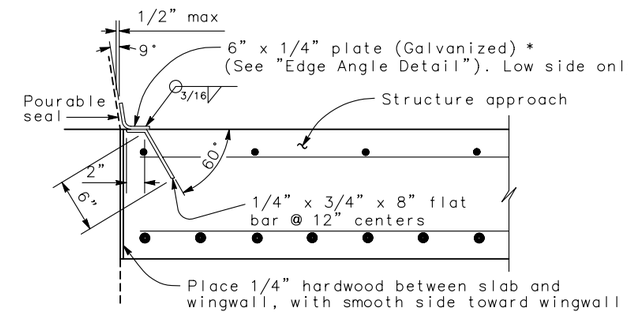


* (TO BE USED WITH TYPE 732 OR TYPE 736 CONCRETE BARRIER)

## DETAIL B
1 1/2" = 1'-0"

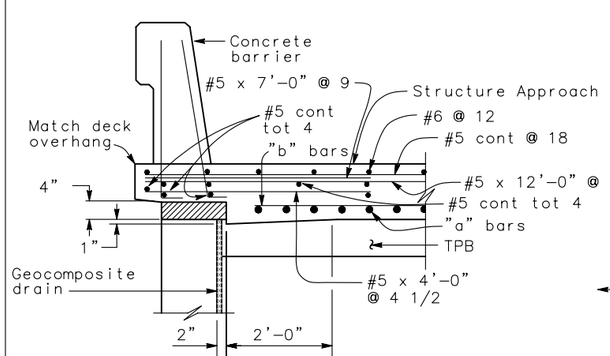


TYPE E-1

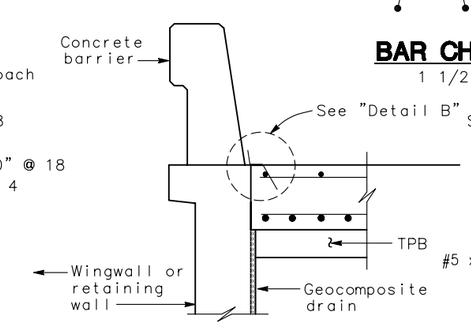


TYPE E-2

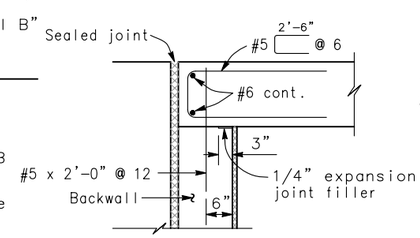


MR ≤ 2"

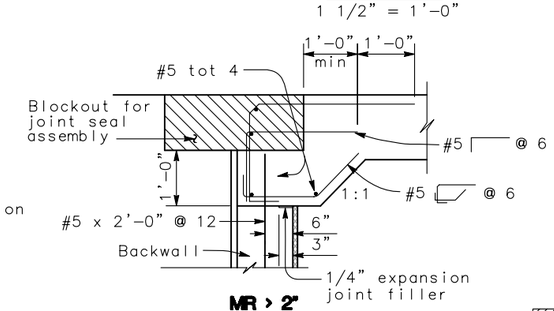


MR > 2"

## ① SECTION C-C
3/4" = 1'-0"

( Type E-1 to be used,unless otherwise shown on plans )

## SEAT TYPE ABUTMENT TIE DETAILS (SEE NOTE 1)
3/4" = 1'-0"

NOTES:

1. For details not shown,see Structure Plans. For MR ≤ 2",adjust bar reinforcement to clear a sawcut for sealed joint,when required.
2. For drainage detgils,see "Structure Approach Drainage Details" sheet.
3. Longitudinal construction joints,when permitted by the Engineer, shall be located on lane lines.
4. End angle or plate at beginning of barrier transition, end of wingwall or end of structure approach as applicable.
5. For transverse contact joint with new PCC paving, refer to Standard Plan P10.
6. At the contractor's option, approach slab transverse reinforcement may be placed parallel to paving notch. Spacing of transverse reinforcement is measured along ℄ roadway.

Remove all polystyrene.

STANDARD DRAWING

| RELEASE DATE 3/14/05 | DESIGN | BY M. TRAFFALIS | CHECKED E. THORKILDSEN | RELEASED BY |
|---|---|---|---|---|
| | DETAILS | BY R. YEE | CHECKED E. THORKILDSEN | |
| FILE NO. xs3-120e | SUBMITTED | BY M. HA | DRAWING DATE 4/98 | OFFICE CHIEF |

DS OSD 2147A (ENGLISH) (REV. X/XX/XX)

① Detail Modified

ORIGINAL SCALE IN INCHES FOR REDUCED PLANS 0 1 2 3

STATE OF CALIFORNIA DEPARTMENT OF TRANSPORTATION

DIVISION OF ENGINEERING SERVICES

CU 05
EA 474501

BRIDGE NO. 49-0252 R/L
MILE POST 6.45

# WILLOW ROAD UNDERCROSSING
# STRUCTURE APPROACH TYPE N(30S)

DISREGARD PRINTS BEARING EARLIER REVISION DATES

REVISION DATES (PRELIMINARY STAGE ONLY) 9/2009 1/2010 3/2010 4/2010

SHEET 15 OF 19

USERNAME => $USER

$REQUEST

TIME PLOTTED => $TIME

DATE PLOTTED => $DATE

| DIST | COUNTY | ROUTE | MILE POST TOTAL PROJECT | SHEET NO. | TOTAL SHEETS |
|---|---|---|---|---|---|
| 05 | SLO | 101 | 5.8/6.9 | 225 | 290 |

REGISTERED CIVIL ENGINEER 4/30/10

PLANS APPROVAL DATE

REGISTERED PROFESSIONAL ENGINEER ALLEN WANG No. C 66503 Exp. 06/30/12 CIVIL STATE OF CALIFORNIA

The State of California or its officers or agents shall not be responsible for the accuracy or completeness of electronic copies of this plan sheet.

COUNTY OF SAN LUIS OBISPO
PUBLIC WORKS AND TRANSPORTATION DEPARTMENT
1050 MONTEREY STREET
SAN LUIS OBISPO, CA 93408

RAJAPPAN & MEYER
CONSULTING ENGINEERS, INC.
1038 LEIGH AVE, SUITE 100
SAN JOSE, CA 95126

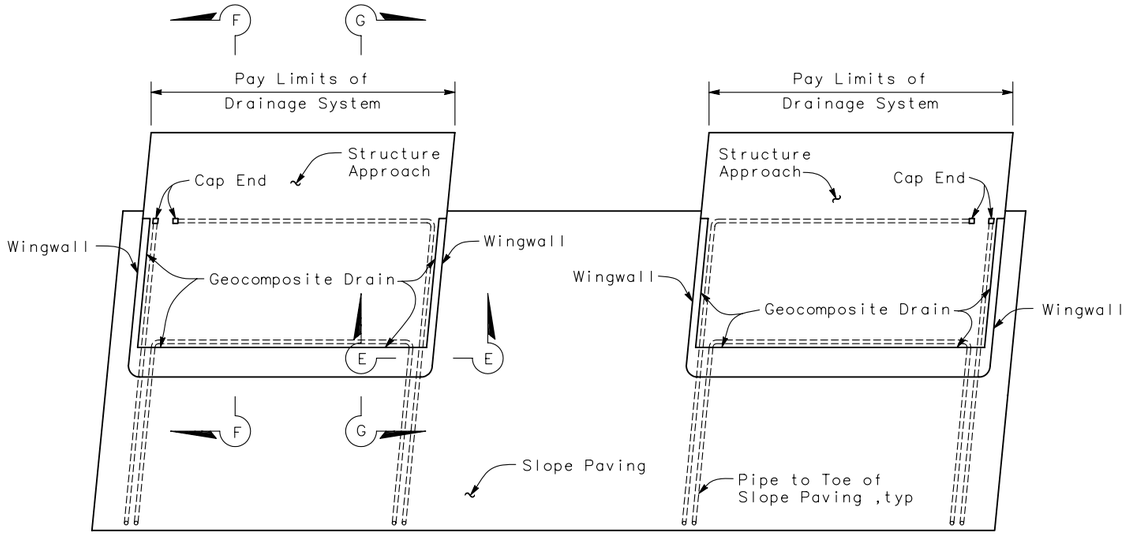


1 **TYPICAL PLAN**
1" = 10'-0"

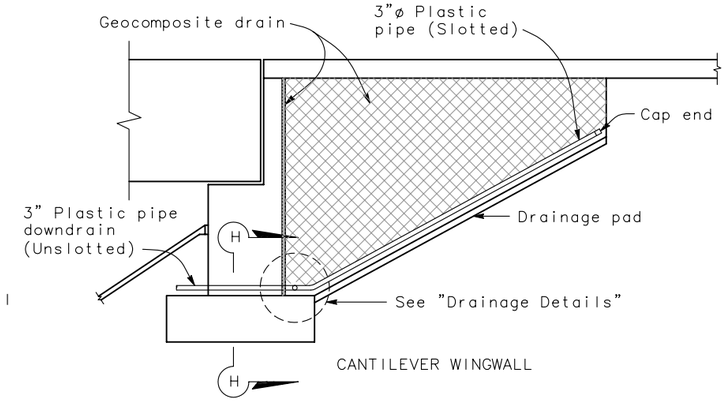


1 **SECTION F-F**
1/4" = 1'-0"

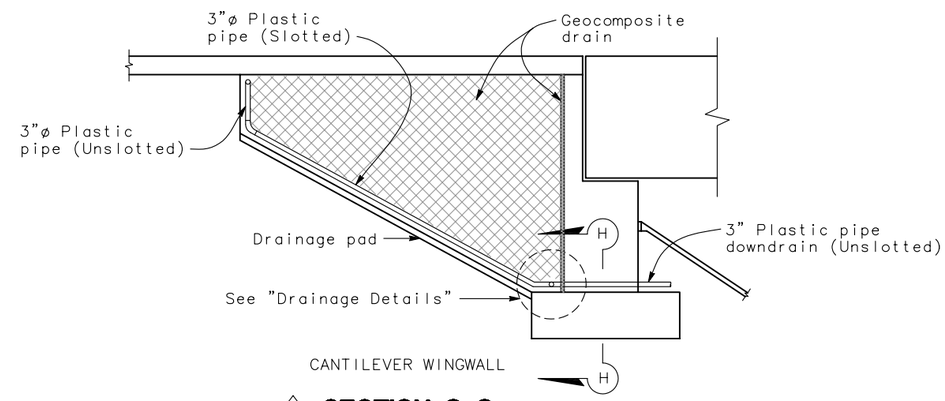


1 **SECTION G-G**
1/4" = 1'-0"

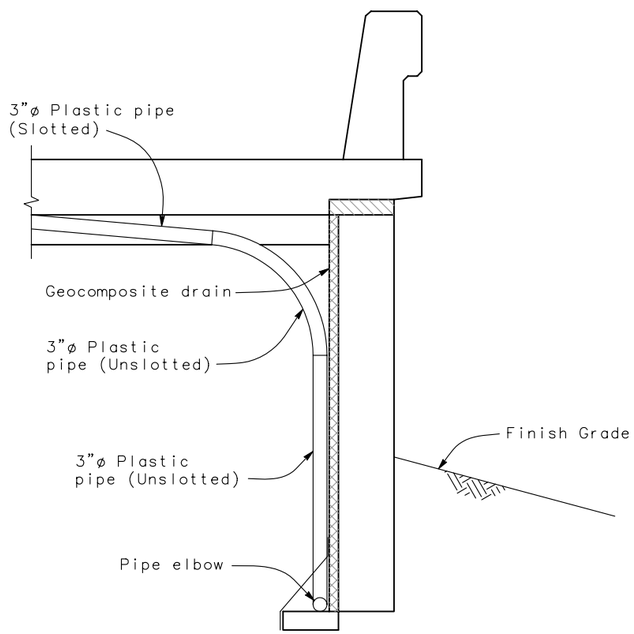


NOTE: Bends and junctions in 3"ø plastic pipe are 30" radius min.

1 **SECTION E-E**
3/4" = 1'-0"

2

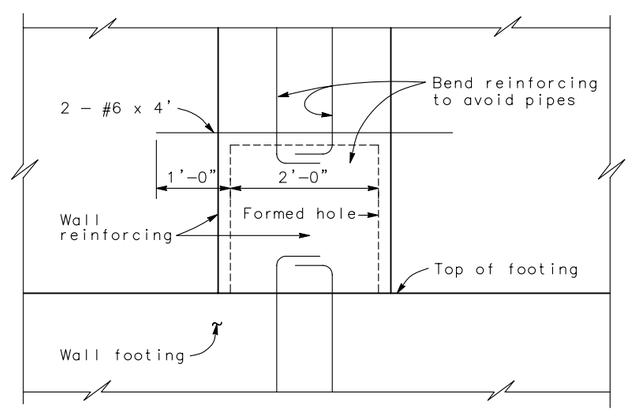


**SECTION H-H**
1" = 1'-0"

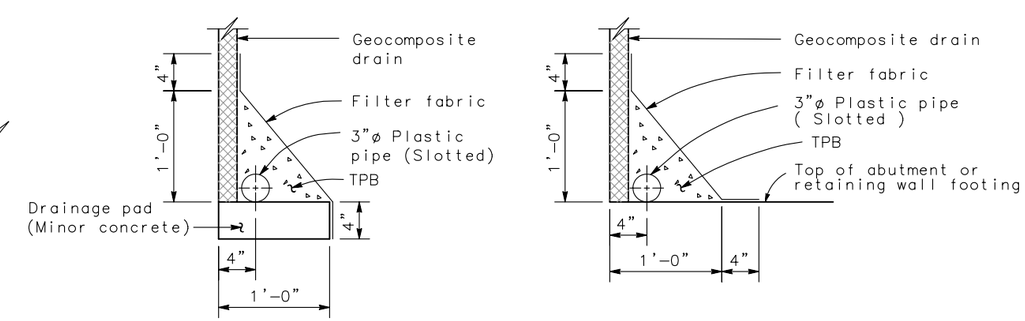


**DRAINAGE DETAILS**
1 1/2" = 1'-0"

| STANDARD DRAWING | | | | |
|---|---|---|---|---|
| RELEASE DATE 4/23/98 | DESIGN | BY M. TRAFFALIS | CHECKED E. THORKILDSEN | RELEASED BY |
| FILE NO. xs3-110e | DETAILS | BY R. YEE | CHECKED E. THORKILDSEN | OFFICE CHIEF |
| | SUBMITTED | BY M. HA | DRAWING DATE 4/98 | |

DS OSD 2147A (ENGLISH) (REV. X/XX/XX)

1 Detail Modified
2 Detail Deleted

ORIGINAL SCALE IN INCHES FOR REDUCED PLANS 0 1 2 3

STATE OF CALIFORNIA
DEPARTMENT OF TRANSPORTATION

DIVISION OF ENGINEERING SERVICES

CU 05
EA 474501

BRIDGE NO. 49-0252 R/L
MILE POST 6.45

# WILLOW ROAD UNDERCROSSING
# STRUCTURE APPROACH DRAINAGE DETAILS

DISREGARD PRINTS BEARING EARLIER REVISION DATES

REVISION DATES (PRELIMINARY STAGE ONLY) 9/2009 1/2010 3/2010 4/2010

SHEET 16 OF 19

USERNAME => $USER

$REQUEST

DATE PLOTTED => $DATE TIME PLOTTED => $TIME

| DIST | COUNTY | ROUTE | MILE POST TOTAL PROJECT | SHEET NO. | TOTAL SHEETS |
|---|---|---|---|---|---|
| 05 | SLO | 101 | 5.8/6.9 | 226 | 290 |

REGISTERED CIVIL ENGINEER 4/30/10

PLANS APPROVAL DATE

REGISTERED PROFESSIONAL ENGINEER ALLEN WANG No. C 66503 Exp. 06/30/12 CIVIL STATE OF CALIFORNIA

The State of California or its officers or agents shall not be responsible for the accuracy or completeness of electronic copies of this plan sheet.

COUNTY OF SAN LUIS OBISPO
PUBLIC WORKS AND TRANSPORTATION DEPARTMENT
1050 MONTEREY STREET
SAN LUIS OBISPO, CA 93408

RAJAPPAN & MEYER
CONSULTING ENGINEERS, INC.
1038 LEIGH AVE, SUITE 100
SAN JOSE, CA 95126

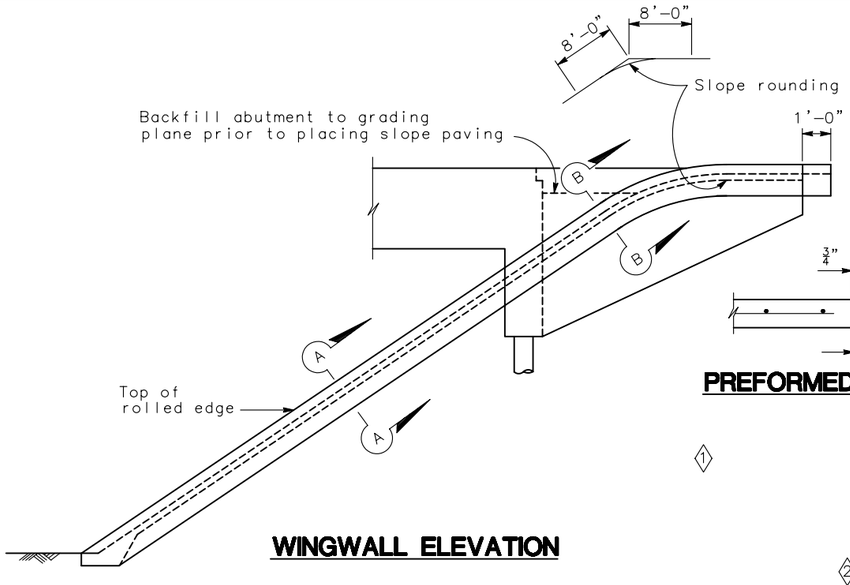


## WINGWALL ELEVATION

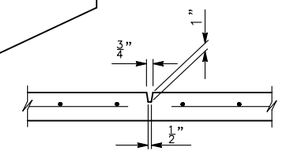


## PREFORMED GROOVE

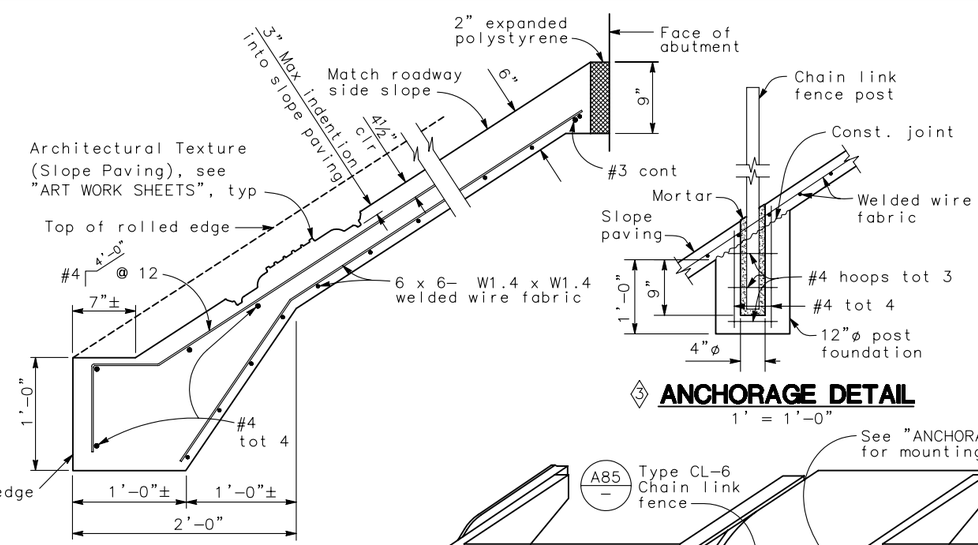


## ② TYPICAL SECTION - CONCRETE PAVING

## ③ ANCHORAGE DETAIL

1' = 1'-0"

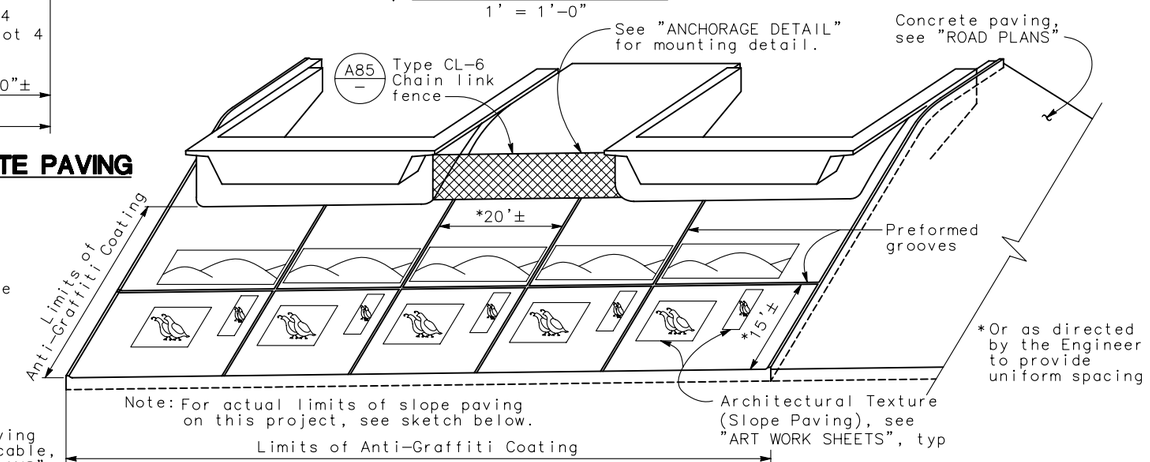


## ② PICTORIAL VIEW OF TYPICAL INSTALLATION

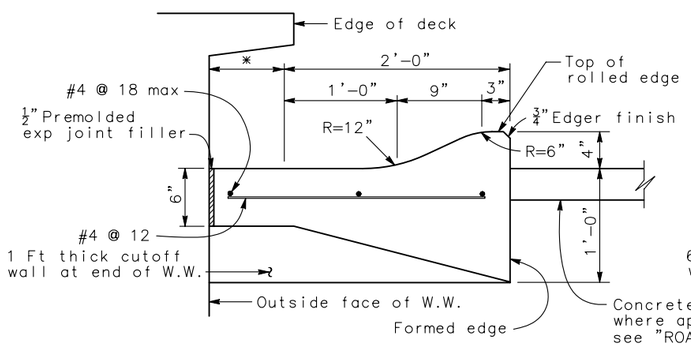


## ② SECTION B-B

*This dimension becomes zero when edge of deck is at outside face of W.W.

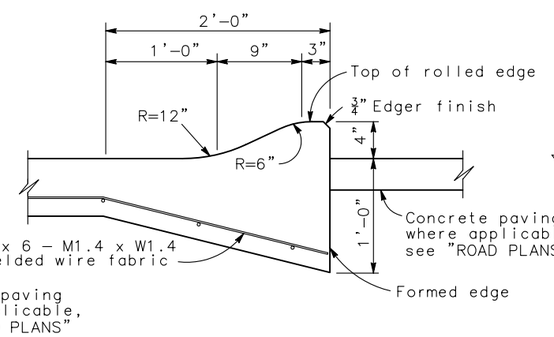


## ② SECTION A-A

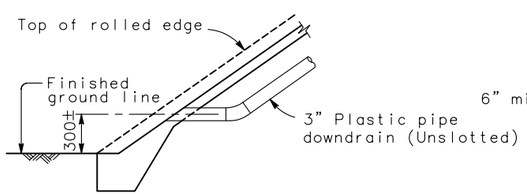


## TYPICAL - NO CURB

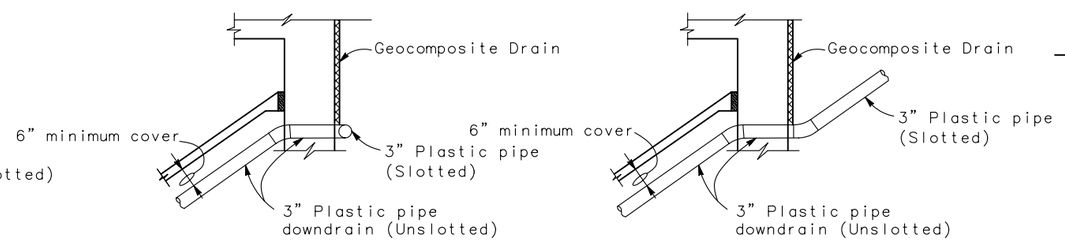


## TYPICAL - DRAIN CONNECTION

## ①② DRAINAGE DETAILS

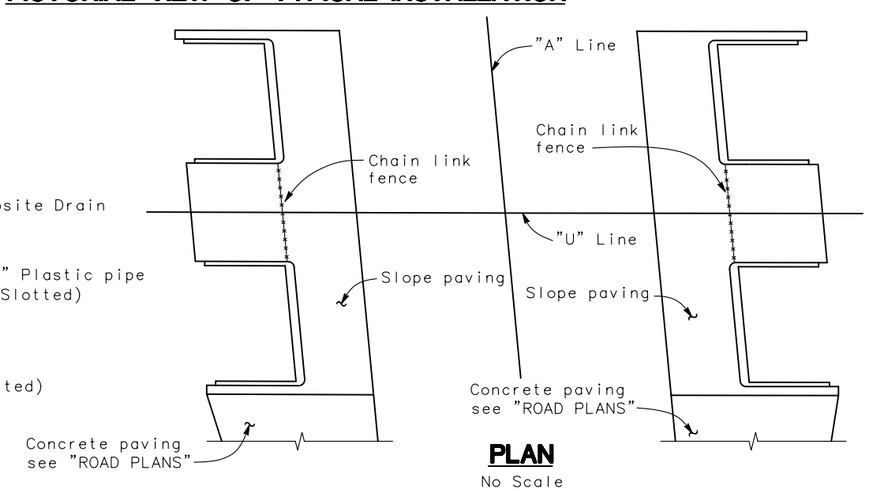


## PLAN

No Scale

## ③ LIMITS OF SLOPE PAVING & DRAINAGE LAYOUT

STANDARD DRAWING

| RELEASE DATE 4/20/00 | DESIGN | BY | CHECKED | RELEASED BY |
|---|---|---|---|---|
| FILE NO. X84-210 | DETAILS | BY R. YEE | CHECKED | OFFICE CHIEF |
| | SUBMITTED | BY C.W. PURKISS | DRAWING DATE 3/89 | |

DS OSD 2147A (ENGLISH) (REV. X/XX/XX)

① Details Deleted
② Detail Modified
③ Detail Added
④ Sheet Converted to English Unit

ORIGINAL SCALE IN INCHES FOR REDUCED PLANS 0 1 2 3

STATE OF CALIFORNIA DEPARTMENT OF TRANSPORTATION

DIVISION OF ENGINEERING SERVICES

CU 05
EA 474501

BRIDGE NO. 49-0252 R/L
MILE POST 6.45

# WILLOW ROAD UNDERCROSSING

# SLOPE PAVING - FULL SLOPE

DISREGARD PRINTS BEARING EARLIER REVISION DATES → REVISION DATES (PRELIMINARY STAGE ONLY) 9/2009 1/2010 3/2010 4/2010

SHEET 17 OF 19

USERNAME => $USER

$REQUEST

TIME PLOTTED => $TIME

DATE PLOTTED => $DATE

| DIST | COUNTY | ROUTE | POST MILES TOTAL PROJECT | SHEET No | TOTAL SHEETS |
|---|---|---|---|---|---|
| 05 | SLO | 101 | 5.9/6.9 | 227 | 290 |

REGISTERED GEOTECHNICAL ENGINEER 4/30/10 DATE

PLANS APPROVAL DATE

The State of California or its officers or agents shall not be responsible for the accuracy or completeness of electronic copies of this plan sheet.

REGISTERED PROFESSIONAL ENGINEER GARY PARIKH No. G.E. 666 Exp. 12/31/11 GEOTECHNICAL STATE OF CALIFORNIA

REFERENCE: CALTRANS SOIL & ROCK LOGGING, CLASSIFICATION, AND PRESENTATION MANUAL (JUNE 2007)

## GROUP SYMBOLS AND NAMES

| Graphic/Symbol | Group Names |
|---|---|
| GW | Well-graded GRAVEL<br>Well-graded GRAVEL with SAND |
| GP | Poorly graded GRAVEL<br>Poorly graded GRAVEL with SAND |
| GW-GM | Well-graded GRAVEL with SILT<br>Well-graded GRAVEL with SILT and SAND |
| GW-GC | Well-graded GRAVEL with CLAY (or SILTY CLAY)<br>Well-graded GRAVEL with CLAY and SAND (or SILTY CLAY and SAND) |
| GP-GM | Poorly graded GRAVEL with SILT<br>Poorly graded GRAVEL with SILT and SAND |
| GP-GC | Poorly graded GRAVEL with CLAY (or SILTY CLAY)<br>Poorly graded GRAVEL with CLAY and SAND (or SILTY CLAY and SAND) |
| GM | SILTY GRAVEL<br>SILTY GRAVEL with SAND |
| GC | CLAYEY GRAVEL<br>CLAYEY GRAVEL with SAND |
| GC-GM | SILTY, CLAYEY GRAVEL<br>SILTY, CLAYEY GRAVEL with SAND |
| SW | Well-graded SAND<br>Well-graded SAND with GRAVEL |
| SP | Poorly graded SAND<br>Poorly graded SAND with GRAVEL |
| SW-SM | Well-graded SAND with SILT<br>Well-graded SAND with SILT and GRAVEL |
| SW-SC | Well-graded SAND with CLAY (or SILTY CLAY)<br>Well-graded SAND with CLAY and GRAVEL (or SILTY CLAY and GRAVEL) |
| SP-SM | Poorly graded SAND with SILT<br>Poorly graded SAND with SILT and GRAVEL |
| SP-SC | Poorly graded SAND with CLAY (or SILTY CLAY)<br>Poorly graded SAND with CLAY and GRAVEL (or SILTY CLAY and GRAVEL) |
| SM | SILTY SAND<br>SILTY SAND with GRAVEL |
| SC | CLAYEY SAND<br>CLAYEY SAND with GRAVEL |
| SC-SM | SILTY, CLAYEY SAND<br>SILTY, CLAYEY SAND with GRAVEL |
| PT | PEAT |
| | COBBLES<br>COBBLES and BOULDERS<br>BOULDERS |

| Graphic/Symbol | Group Names |
|---|---|
| CL | Lean CLAY<br>Lean CLAY with SAND<br>Lean CLAY with GRAVEL<br>SANDY lean CLAY<br>SANDY lean CLAY with GRAVEL<br>GRAVELLY lean CLAY<br>GRAVELLY lean CLAY with SAND |
| CL-ML | SILTY CLAY<br>SILTY CLAY with SAND<br>SILTY CLAY with GRAVEL<br>SANDY SILTY CLAY<br>SANDY SILTY CLAY with GRAVEL<br>GRAVELLY SILTY CLAY<br>GRAVELLY SILTY CLAY with SAND |
| ML | SILT<br>SILT with SAND<br>SILT with GRAVEL<br>SANDY SILT<br>SANDY SILT with GRAVEL<br>GRAVELLY SILT<br>GRAVELLY SILT with SAND |
| OL | ORGANIC lean CLAY<br>ORGANIC lean CLAY with SAND<br>ORGANIC lean CLAY with GRAVEL<br>SANDY ORGANIC lean CLAY<br>SANDY ORGANIC lean CLAY with GRAVEL<br>GRAVELLY ORGANIC lean CLAY<br>GRAVELLY ORGANIC lean CLAY with SAND |
| OL | ORGANIC SILT<br>ORGANIC SILT with SAND<br>ORGANIC SILT with GRAVEL<br>SANDY ORGANIC SILT<br>SANDY ORGANIC SILT with GRAVEL<br>GRAVELLY ORGANIC SILT<br>GRAVELLY ORGANIC SILT with SAND |
| CH | Fat CLAY<br>Fat CLAY with SAND<br>Fat CLAY with GRAVEL<br>SANDY fat CLAY<br>SANDY fat CLAY with GRAVEL<br>GRAVELLY fat CLAY<br>GRAVELLY fat CLAY with SAND |
| MH | Elastic SILT<br>Elastic SILT with SAND<br>Elastic SILT with GRAVEL<br>SANDY elastic SILT<br>SANDY elastic SILT with GRAVEL<br>GRAVELLY elastic SILT<br>GRAVELLY elastic SILT with SAND |
| OH | ORGANIC fat CLAY<br>ORGANIC fat CLAY with SAND<br>ORGANIC fat CLAY with GRAVEL<br>SANDY ORGANIC fat CLAY<br>SANDY ORGANIC fat CLAY with GRAVEL<br>GRAVELLY ORGANIC fat CLAY<br>GRAVELLY ORGANIC fat CLAY with SAND |
| OH | ORGANIC elastic SILT<br>ORGANIC elastic SILT with SAND<br>ORGANIC elastic SILT with GRAVEL<br>SANDY ORGANIC elastic SILT<br>SANDY ORGANIC elastic SILT with GRAVEL<br>GRAVELLY ORGANIC elastic SILT<br>GRAVELLY ORGANIC elastic SILT with SAND |
| OL/OH | ORGANIC SOIL<br>ORGANIC SOIL with SAND<br>ORGANIC SOIL with GRAVEL<br>SANDY ORGANIC SOIL<br>SANDY ORGANIC SOIL with GRAVEL<br>GRAVELLY ORGANIC SOIL<br>GRAVELLY ORGANIC SOIL with SAND |

## FIELD AND LABORATORY TESTING

- (C) Consolidation (ASTM D 2435)
- (CL) Collapse Potential (ASTM D 5333)
- (CP) Compaction Curve (CTM 216)
- (CR) Corrosivity Testing (CTM 643, CTM 422, CTM 417)
- (CU) Consolidated Undrained Triaxial (ASTM D 4767)
- (DS) Direct Shear (ASTM D 3080)
- (EI) Expansion Index (ASTM D 4829)
- (M) Moisture Content (ASTM D 2216)
- (OC) Organic Content-% (ASTM D 2974)
- (P) Permeability (CTM 220)
- (PA) Particle Size Analysis (ASTM D 422)
- (PI) Plasticity Index (AASHTO T 90) Liquid Limit (AASHTO T 89)
- (PL) Point Load Index (ASTM D 5731)
- (PM) Pressure Meter
- (PP) Pocket Penetrometer
- (R) R-Value (CTM 301)
- (SE) Sand Equivalent (CTM 217)
- (SG) Specific Gravity (AASHTO T 100)
- (SL) Shrinkage Limit (ASTM D 427)
- (SW) Swell Potential (ASTM D 4546)
- (TV) Pocket Torvane
- (UC) Unconfined Compression-Soil (ASTM D 2166) Unconfined Compression-Rock (ASTM D 2938)
- (UU) Unconsolidated Undrained Triaxial (ASTM D 2850)
- (UW) Unit Weight (ASTM D 4767)
- (VS) Vane Shear (AASHTO T 223)

## APPARENT DENSITY OF COHESIONLESS SOILS

| Description | SPT $N_{60}$ (Blows / 12 inches) |
|---|---|
| Very loose | 0 - 4 |
| Loose | 5 - 10 |
| Medium Dense | 11 - 30 |
| Dense | 31 - 50 |
| Very Dense | > 50 |

## MOISTURE

| Description | Criteria |
|---|---|
| Dry | Absence of moisture, dusty, dry to the touch |
| Moist | Damp but no visible water |
| Wet | Visible free water, usually soil is below water table |

## PERCENT OR PROPORTION OF SOILS

| Description | Criteria |
|---|---|
| Trace | Particles are present but estimated to be less than 5% |
| Few | 5 to 10% |
| Little | 15 to 25% |
| Some | 30 to 45% |
| Mostly | 50 to 100% |

## PARTICLE SIZE

| Description | | Size |
|---|---|---|
| Boulder | | > 12" |
| Cobble | | 3" to 12" |
| Gravel | Coarse | 3/4" to 3" |
| | Fine | No. 4 to 3/4" |
| Sand | Coarse | No. 10 to No. 4 |
| | Medium | No. 40 to No. 10 |
| | Fine | No. 200 to No. 40 |

## CEMENTATION

| Description | Criteria |
|---|---|
| Weak | Crumbles or breaks with handling or little finger pressure. |
| Moderate | Crumbles or breaks with considerable finger pressure. |
| Strong | Will not crumble or break with finger pressure. |

## CONSISTENCY OF COHESIVE SOILS

| Description | Unconfined Compressive Strength (tsf) | Pocket Penetrometer Measurement (tsf) | Torvane Measurement (tsf) | Field Approximation |
|---|---|---|---|---|
| Very Soft | < 0.25 | < 0.25 | < 0.12 | Easily penetrated several inches by fist |
| Soft | 0.25 to 0.50 | 0.25 to 0.50 | 0.12 to 0.25 | Easily penetrated several inches by thumb |
| Medium Stiff | 0.50 to 1.0 | 0.50 to 1.0 | 0.25 to 0.50 | Penetrated several inches by thumb with moderate effort |
| Stiff | 1 to 2 | 1 to 2 | 0.50 to 1.0 | Readily indented by thumb but penetrated only with great effort |
| Very Stiff | 2 to 4 | 2 to 4 | 1.0 to 2.0 | Readily indented by thumbnail |
| Hard | > 4.0 | > 4.0 | > 2.0 | Indented by thumbnail with difficulty |

## PLASTICITY OF FINE-GRAINED SOILS

| Description | Criteria |
|---|---|
| Nonplastic | A 1/8-inch thread cannot be rolled at any water content. |
| Low | The thread can barely be rolled and the lump cannot be formed when drier than the plastic limit. |
| Medium | The thread is easy to roll and not much time is required to reach the plastic limit. The thread cannot be rerolled after reaching the plastic limit. The lump crumbles when drier than the plastic limit. |
| High | It takes considerable time rolling and kneading to reach the plastic limit. The thread can be rerolled several times after reaching the plastic limit. The lump can be formed without crumbling when drier than the plastic limit. |

## BOREHOLE IDENTIFICATION

| Symbol | Hole Type | Description |
|---|---|---|
| Size (double square) | A | Auger Boring |
| Size (square) | R<br>P | Rotary drilled boring<br>Rotary percussion boring (air) |
| Size (diamond) | R | Rotary drilled diamond core |
| Size (rectangle) | HD<br>HA | Hand driven (1-inch soil tube)<br>Hand Auger |
| ● | D | Dynamic Cone Penetration Boring |
| ▲ | CPT | Cone Penetration Test (ASTM D 5778-95) |
| □ | O | Other |

Note: Size in inches.

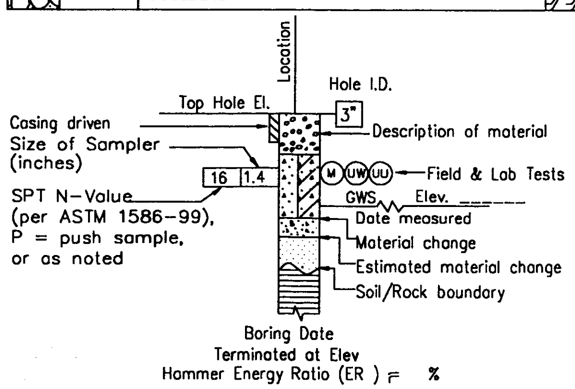


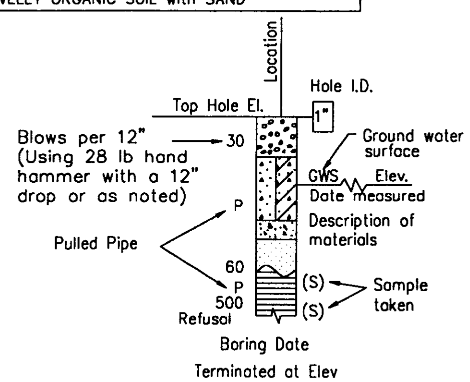


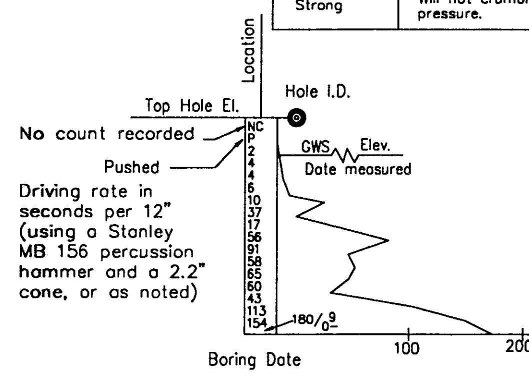


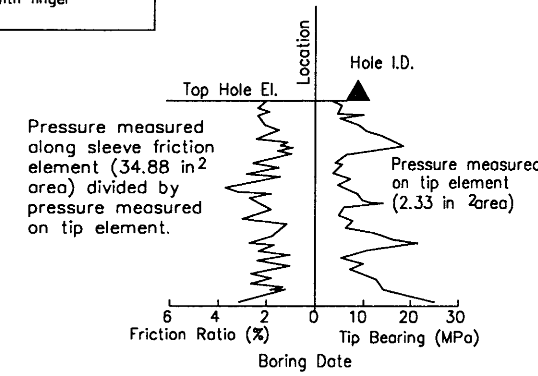


| | | | |
|---|---|---|---|
| DESIGN OVERSIGHT | DRAWN BY | L. TRAN | L. BHANGOO<br>FIELD INVESTIGATION BY: |
| SIGN OFF DATE | CHECKED BY | D. WANG | DATE: JANUARY AND NOVEMBER 2007 |

PREPARED FOR THE STATE OF CALIFORNIA DEPARTMENT OF TRANSPORTATION

D. WANG
PROJECT ENGINEER

BRIDGE NO. 49-0252L/R
POST MILES 6.45

# SOIL LEGEND

# LOG OF TEST BORINGS 1 OF 2

OGS GEOTECHNICAL LOG OF TEST BORINGS SHEET (ENGLISH) (REV. 06-01-09)

ORIGINAL SCALE IN INCHES FOR REDUCED PLANS 0 1 2 3

CU 05
EA 474501

DISREGARD PRINTS BEARING EARLIER REVISION DATES → REVISION DATES 11/07/08 04/30/09 07/08/09 12/16/09



Itron Apr 30, 2010 - 10:11am S:\ACAD\203125.gd1\Legend Sheet (UC).dwg

| DIST | COUNTY | ROUTE | POST MILES TOTAL PROJECT | SHEET No | TOTAL SHEETS |
|---|---|---|---|---|---|
| 05 | SLO | 101 | 5.9/6.9 | 228 | 290 |

GEOTECHNICAL PROFESSIONAL — DATE 4/30/10

PLANS APPROVAL DATE

REGISTERED PROFESSIONAL ENGINEER — GARY PARIKH — No. G.E. 666 — Exp. 12/31/11 — GEOTECHNICAL — STATE OF CALIFORNIA

The State of California or its officers or agents shall not be responsible for the accuracy or completeness of scanned copies of this plan sheet.

PARIKH CONSULTANTS, INC.
2360 QUME DRIVE, SUITE A
SAN JOSE, CA 95131

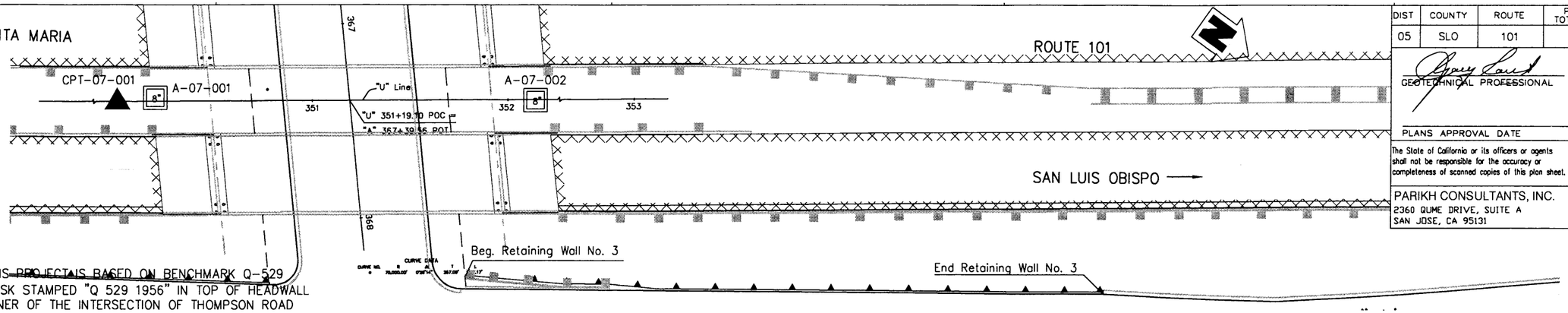


PLAN
1"=30'

BENCHMARK
THE BENCHMARK FOR THIS PROJECT IS BASED ON BENCHMARK Q-529 (PID FV0764) BEING A DISK STAMPED "Q 529 1956" IN TOP OF HEADWALL AT THE NORTHEAST CORNER OF THE INTERSECTION OF THOMPSON ROAD & TEFFT STREET, ELEVATION BEING 332.32 FT (NAVD88 ADJ.). SURVEY CONTROL POINT ELEVATIONS WERE ESTABLISHED BY GPS RTK SURVEY HOLDING THE BENCHPARK WITH 2003 GEOID. THE TEMPORARY BENCHMARK FOR THIS PROJECT IS CALTRANS STANDARD CENTERLINE REFERENCE MONUMENT STAMPED "43-22, 345+67.616=347+34.74", ELEVATION BEING 367.78 FT (NAVD88).

Notes:
This LOTB sheet was prepared in accordance with the Caltrans Soil & Rock Logging Classification, and Presentation Manual (June 2007)

Standard Penetration Test Sampler: I.D. = 1.4"; O.D. = 2"
Modified California Sampler: I.D. = 2.5"; O.D. = 3"
Hammer Assembly: A 140 lb hammer with a 30" drop

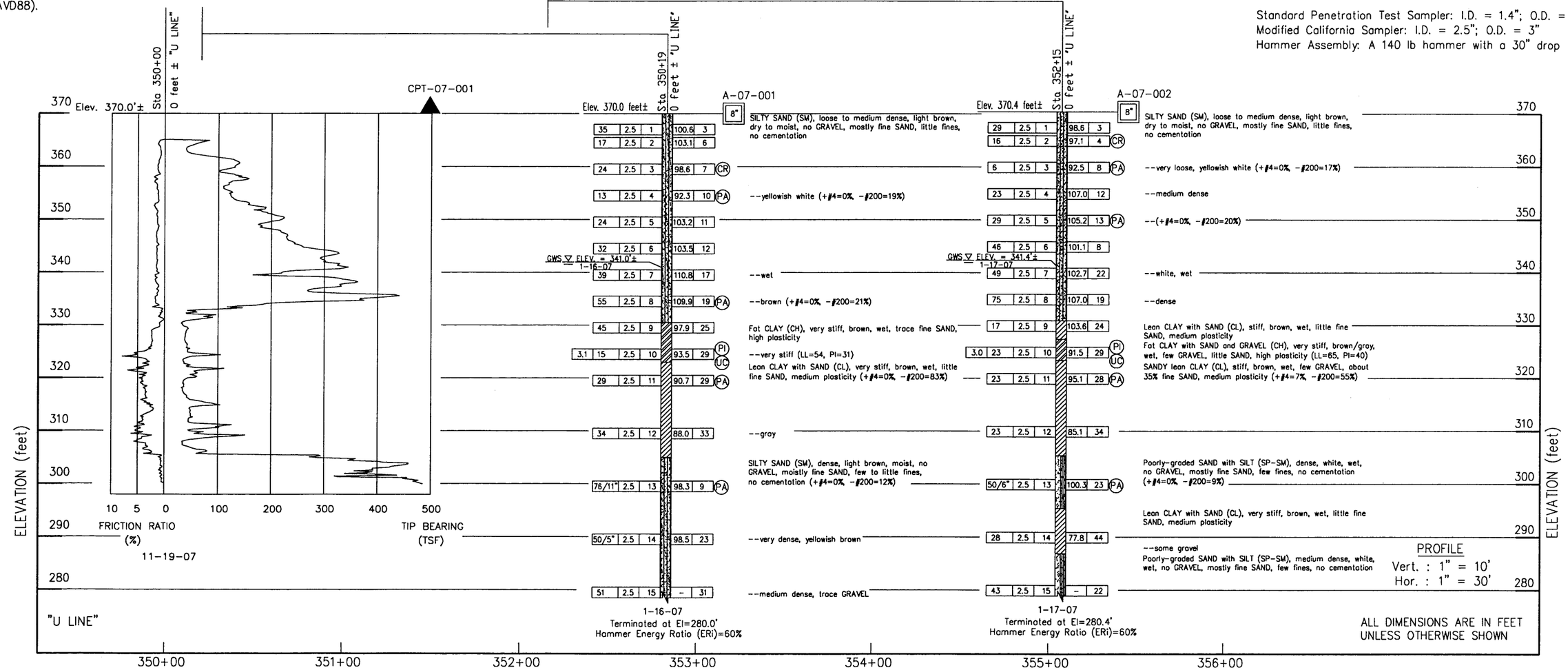


PROFILE
Vert. : 1" = 10'
Hor. : 1" = 30'

ALL DIMENSIONS ARE IN FEET UNLESS OTHERWISE SHOWN

| | | | |
|---|---|---|---|
| DESIGN OVERSIGHT | DRAWN BY | L. TRAN | L. BHANGOO — FIELD INVESTIGATION BY: |
| SIGN OFF DATE | CHECKED BY | D. WANG | DATE: JANUARY AND NOVEMBER 2007 |

PREPARED FOR THE STATE OF CALIFORNIA DEPARTMENT OF TRANSPORTATION

D. WANG — PROJECT ENGINEER

CU 05
EA 474501

BRIDGE NO. 49-0252L/R
POST MILES 6.45

# WILLOW ROAD UNDERCROSSING
## LOG OF TEST BORINGS 2 OF 2

OGS GEOTECHNICAL LOG OF TEST BORINGS SHEET (ENGLISH) (REV. 06-01-09)

ORIGINAL SCALE IN INCHES FOR REDUCED PLANS 0 1 2 3

DISREGARD PRINTS BEARING EARLIER REVISION DATES — REVISION DATES 11/07/08 04/30/09 07/08/09 12/16/09

SHEET 19 OF 19

Apr 30, 2010 - 10:11am S:\ACAD\203125.gpl\LOTB (UC).dwg

| DIST | COUNTY | ROUTE | POST MILES TOTAL PROJECT | SHEET No. | TOTAL SHEETS |
|---|---|---|---|---|---|
| 05 | SLO | 101 | | 229 | 290 |

REGISTERED STRUCTURAL ENGINEER

PLANS APPROVAL DATE

REGISTERED PROFESSIONAL ENGINEER PHILIP SHINN No. S4967 Exp. 12/31/10 STRUCTURAL STATE OF CALIFORNIA

*The State of California or its officers or agents shall not be responsible for the accuracy or completeness of electronic copies of this plan sheet.*

COUNTY OF SAN LUIS OBISPO
PUBLIC WORKS AND TRANSPORTATION DEPARTMENT
1050 MONTEREY STREET
SAN LUIS OBISPO, CA 93408

RAJAPPAN & MEYER
CONSULTING ENGINEERS, INC.
1038 LEIGH AVE, SUITE 100
SAN JOSE, CA 95126

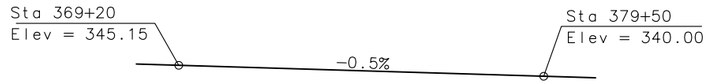


## PROFILE GRADE

No Scale

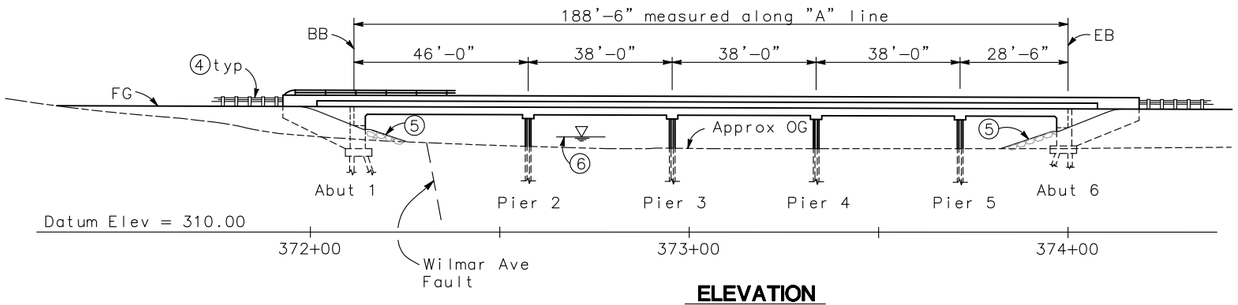


## ELEVATION

1" = 20'-0"

NOTES:

① Paint bridge name "Nipomo Creek Bridge"
② Paint bridge number and year completed
③ Structure Approach Type N
④ Metal Beam Guard Railing (MBGR), see 'Road Plans'
⑤ Rock slope protection (2:1 slope)
⑥ 50 year water elevation: 335.01'
100 year water elevation: 335.18'

▤ Indicates drainage inlet

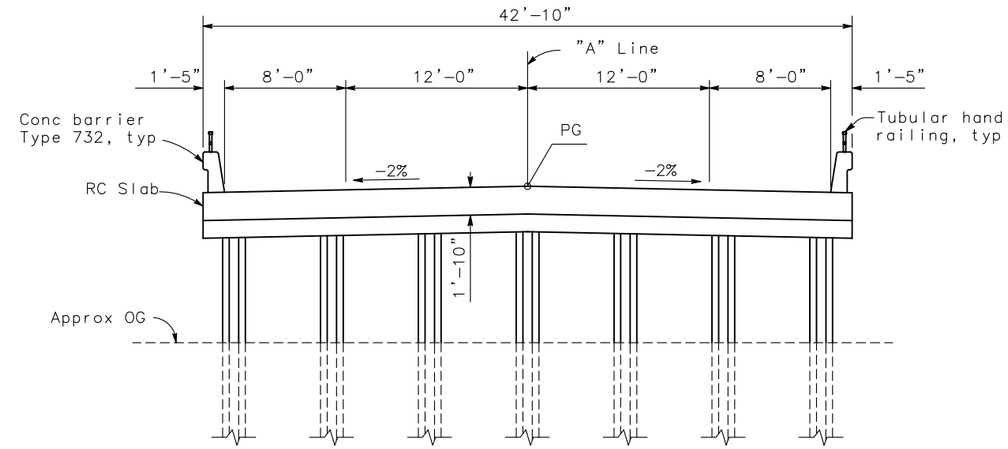


## TYPICAL SECTION

1" = 5'-0"

## PILE DATA TABLE

| Location | Pile Type | Design Loading (Service, kips) | Nominal Resistance (kips) | | Design Tip Elev. (ft) | Specified Tip Elevations (ft) |
|---|---|---|---|---|---|---|
| | | | Compression | Tension | | |
| Abutment 1 | 14" Square (200, Alt "X") | 100 | 200 | 0 | 300(1) & (2) | 300 |
| Pier 2 | 18" Octagonal | 160 | 320 | 0 | 275(1); 295(2) | 275 |
| Pier 3 | 18" Octagonal | 130 | 260 | 0 | 282(1); 295(2) | 282 |
| Pier 4 | 18" Octagonal | 135 | 270 | 0 | 282(1); 295(2) | 282 |
| Pier 5 | 18" Octagonal | 125 | 250 | 0 | 282(1); 295(2) | 282 |
| Abutment 6 | 14" Square (200, Alt "X") | 90 | 180 | 0 | 300 (1) & (2) | 300 |

Design tip elevations are controlled by the following demands: (1)Compression; (2)Lateral Load

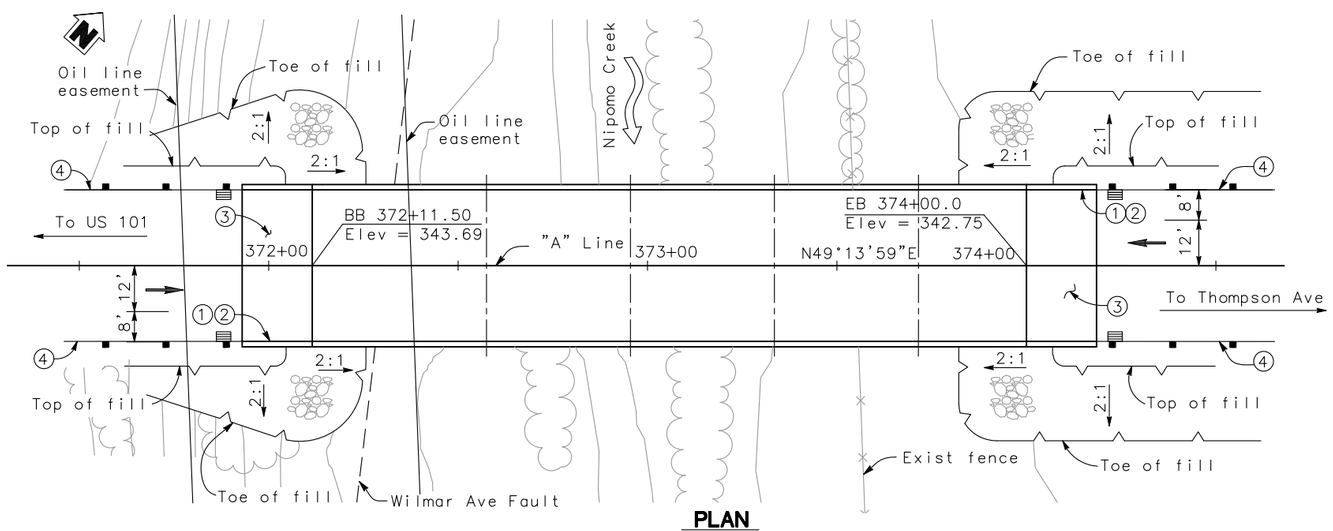


## PLAN

1" = 20'-0"

## QUANTITIES

| | |
|---|---|
| STRUCTURE EXCAVATION (BRIDGE) | 89 CY |
| STRUCTURE BACKFILL (BRIDGE) | 117 CY |
| FURNISH PILING (CLASS 200) | 691 FT |
| FURNISH PILING (18" OCTAGONAL) | 1680 FT |
| DRIVE PILE (CLASS 200) | 22 EA |
| DRIVE PILE (18" OCTAGONAL) | 28 EA |
| STRUCTURE CONCRETE, (BRIDGE) | 700 CY |
| STRUCTURE CONCRETE, BRIDGE FOOTING | 46 CY |
| STRUCTURE CONCRETE, APPROACH SLAB (TYPE N) | 44 CY |
| BAR REINFORCING STEEL (BRIDGE) | 144612 LB |
| TUBULAR HANDRAILING | 451 FT |
| JOINT SEAL (MR 1") | 86 FT |
| CONCRETE BARRIER (TYPE 732) | 451 LF |

## INDEX TO BRIDGE PLANS


| BRIDGE SHEET NO. | TITLE |
|---|---|
| 1 | GENERAL PLAN |
| 2 | DECK CONTOURS |
| 3 | FOUNDATION PLAN |
| 4 | ABUTMENT LAYOUT |
| 5 | ABUTMENT DETAILS |
| 6 | PIER AND PILE DETAILS |
| 7 | TYPICAL SECTION |
| 8 | SLAB REINFORCEMENT |
| 9 | STRUCTURE APPROACH |
| 10 | LOG OF TEST BORINGS 1 OF 2 |
| 11 | LOG OF TEST BORINGS 2 OF 2 |


THIS PLAN IS FOR BID ADDITIVE

THIS PLAN IS FOR COUNTY FACILITY

| | | | | | | |
|---|---|---|---|---|---|---|
| DESIGN OVERSIGHT | DESIGN | BY P. Shinn | CHECKED K. HARIRSAZ | LRFD | LIVE LOADING: HS20-44 AND ALTERNATIVE AND PERMIT DESIGN LOAD | |
| | DETAILS | BY P. Shinn | CHECKED K. HARIRSAZ | LAYOUT | BY P. Shinn | CHECKED K. HARIRSAZ |
| SIGN OFF DATE | QUANTITIES | BY P. Shinn | CHECKED K. HARIRSAZ | SPECIFICATIONS | BY | PLANS AND SPECS COMPARED |

PREPARED FOR THE STATE OF CALIFORNIA DEPARTMENT OF TRANSPORTATION

K. HARIRSAZ
PROJECT ENGINEER

BRIDGE NO. N/A
POST MILES 6.45

# NIPOMO CREEK BRIDGE

# GENERAL PLAN

DESIGN GENERAL PLAN SHEET (ENGLISH) (REV. 2/25/05)

ORIGINAL SCALE IN INCHES FOR REDUCED PLANS 0 1 2 3

CU 05
EA 474501

DISREGARD PRINTS BEARING EARLIER REVISION DATES

REVISION DATES (PRELIMINARY STAGE ONLY) 5/3/2009 12/28/09 4/30/10 7/16/10

SHEET 1 OF 11

FILE => $REQUEST

USERNAME => $USER DATE PLOTTED => $DATE TIME PLOTTED => $TIME

| DIST | COUNTY | ROUTE | POST MILES TOTAL PROJECT | SHEET No. | TOTAL SHEETS |
|---|---|---|---|---|---|
| 05 | SLO | 101 | | 230 | 290 |

REGISTERED STRUCTURAL ENGINEER

PLANS APPROVAL DATE

REGISTERED PROFESSIONAL ENGINEER PHILIP SHINN No. S4967 Exp. 12/31/10 STRUCTURAL STATE OF CALIFORNIA

*The State of California or its officers or agents shall not be responsible for the accuracy or completeness of electronic copies of this plan sheet.*

COUNTY OF SAN LUIS OBISPO
PUBLIC WORKS AND TRANSPORTATION DEPARTMENT
1050 MONTEREY STREET
SAN LUIS OBISPO, CA 93408

RAJAPPAN & MEYER
CONSULTING ENGINEERS, INC.
1038 LEIGH AVE, SUITE 100
SAN JOSE, CA 95126

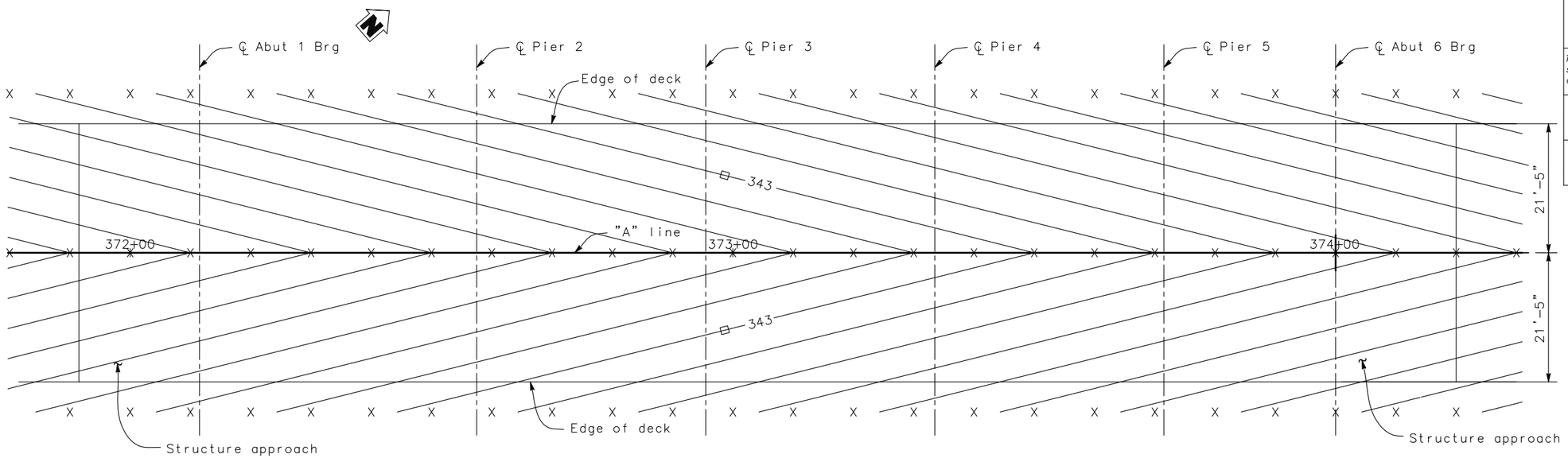


**PLAN**
1" = 10'-0"

NOTES:

1. □ Indicates even foot contours
2. x Indicates 10 ft intervals
3. Contour interval = 0.1 ft
4. Contours do not include camber or falsework settlement

**STANDARD PLANS DATED MAY, 2006**

| | |
|---|---|
| A10A | Acronyms and Abbreviations (Sheet 1 of 2) |
| A10B | Acronyms and Abbreviations (Sheet 2 of 2) |
| A10C | Symbols (Sheet 1 of 2) |
| A10D | Symbols (Sheet 2 of 2) |
| A62B | Limits of Payment for Excavation and Backfill – Bridge Surcharge and Wall |
| A62-C | Limits of payment for Excavation and Backfill – Bridge |
| B0-1 | Bridge Details |
| B0-3 | Bridge Details |
| B0-13 | Bridge Details |
| B2-8 | Pile Details Class 200 |
| B6-21 | Joint Seals (Maximum Movement Rating = 2") |
| B11-51 | Tubular Hand Railing |
| B11-55 | Concrete Barrier Type 732 |
| P10 | Concrete Pavement – Dowel Bar Details |

Standard Plan Sheet No.
Detail No.

**GENERAL NOTES**
**LOAD FACTOR DESIGN**

| | |
|---|---|
| DESIGN: | Caltrans Bridge Design Specifications April 2000 (LFD) (1996 AASHTO with Interims and Revisions by Caltrans) |
| SEISMIC DESIGN: | Caltrans Seismic Design Criteria (SDC), Version 1.4, June 2006 |
| DEAD LOAD: | Includes 35 psf for future wearing surface. |
| LIVE LOADING: | HS20-44 and alternative and permit design load |
| SEISMIC LOADING: | Soil Profile Type D, Mw = 6.5, PRA = 0.7g with 20% increase of Sa for T > 1 sec,no change of Sa for T < 0.5 sec. and linear interpolation between 0.5 and 1 sec, see 'ARS DESIGN CURVE' |
| REINFORCED CONCRETE: | fy = 60 ksi<br>f'c = 4.0 ksi |

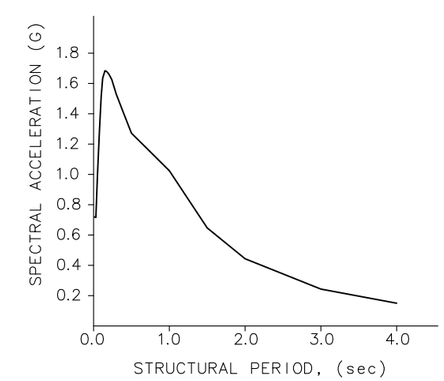


**ARS DESIGN CURVE**
No Scale

THIS PLAN IS FOR BID ADDITIVE

THIS PLAN IS FOR COUNTY FACILITY

| | | | | |
|---|---|---|---|---|
| DESIGN | BY P. Shinn | CHECKED K. HARIRSAZ | | |
| DETAILS | BY P. Shinn | CHECKED K. HARIRSAZ | | |
| QUANTITIES | BY P. Shinn | CHECKED K. HARIRSAZ | | |

DESIGN OVERSIGHT

SIGN OFF DATE

PREPARED FOR THE STATE OF CALIFORNIA DEPARTMENT OF TRANSPORTATION

K. HARIRSAZ
PROJECT ENGINEER

BRIDGE NO. N/A
POST MILES 6.45

# NIPOMO CREEK BRIDGE
# DECK CONTOURS

DESIGN DETAIL SHEET (ENGLISH) (REV. 2/25/05)

ORIGINAL SCALE IN INCHES FOR REDUCED PLANS 0 1 2 3

CU 05
EA 474501

FILE => $REQUEST

DISREGARD PRINTS BEARING EARLIER REVISION DATES

REVISION DATES (PRELIMINARY STAGE ONLY) 5/2009 1/8/10 4/30/10 7/16/10

SHEET 2 OF 11

USERNAME => $USER DATE PLOTTED => $DATE TIME PLOTTED => $TIME

| DIST | COUNTY | ROUTE | KILOMETER POST TOTAL PROJECT | SHEET No | TOTAL |
|---|---|---|---|---|---|
| 05 | SLO | 101 | | 231 | 290 |

REGISTERED STRUCTURAL ENGINEER

PLANS APPROVAL DATE

REGISTERED PROFESSIONAL ENGINEER PHILIP SHINN No. S4967 Exp. 12/31/10 STRUCTURAL STATE OF CALIFORNIA

*The State of California or its officers or agents shall not be responsible for the accuracy or completeness of electronic copies of this plan sheet.*

COUNTY OF SAN LUIS OBISPO
PUBLIC WORKS AND TRANSPORTATION DEPARTMENT
1050 MONTEREY STREET
SAN LUIS OBISPO, CA 93408

RAJAPPAN & MEYER
CONSULTING ENGINEERS, INC.
1038 LEIGH AVE, SUITE 100
SAN JOSE, CA 95126

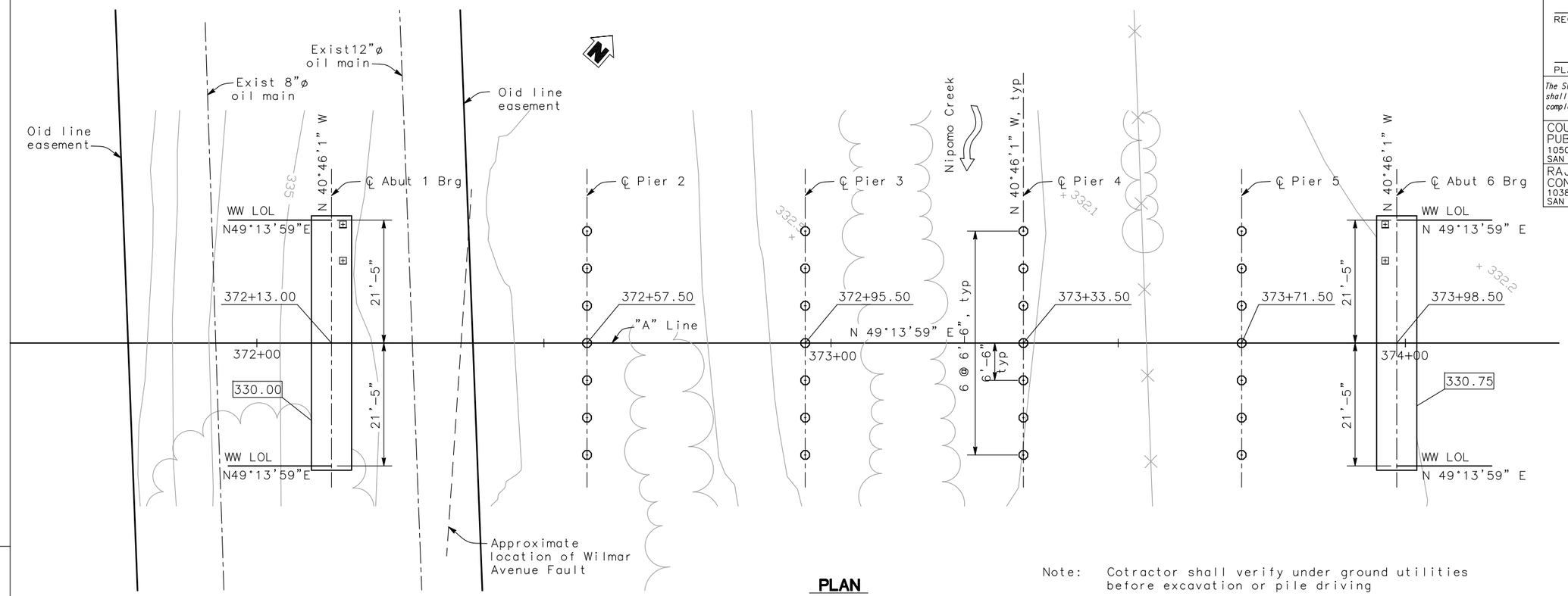


**PLAN**
1" = 10'-0"

Note: Cotractor shall verify under ground utilities before excavation or pile driving

## HYDRAULIC SUMMARY

Drainage Area = 102.5 square miles
Minimum clearance to soffit = 6.92 ft

| | Design Flood | Base Flood | Over-Topping Flood |
|---|---|---|---|
| Frequency (Years) | 100 | 100 | N/A |
| Discharge (in cubic feet per second) | 1,140 | 1,140 | N/A |
| Water Surface (elevation at bridge) | 335.18 | 334.32 | N/A |

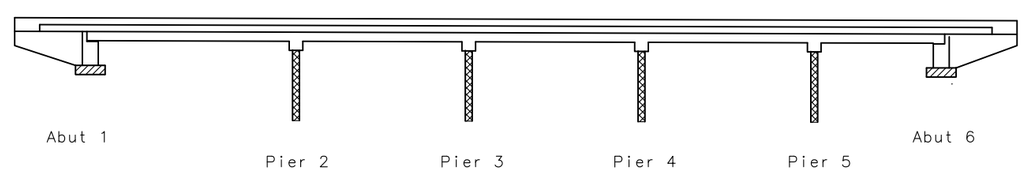


Structural concrete, Bridge (4000 psi @ 28 days)
Structural concrete, Bridge Footing (4000 psi @ 28 days)
Precast concrete pile extensions

## CONCRETE STRENGTH AND TYPE LIMITS

No Scale

## BENCH MARK

## DATUM

NGVD88 – City Datum
(COS1996ADJ) feet.

GEOTECHNICAL PROFESSIONAL APPROVAL DATE 4/30/10

THIS PLAN IS FOR BID ADDITIVE

THIS PLAN IS FOR COUNTY FACILITY

| | | | | | | | |
|---|---|---|---|---|---|---|---|
| DESIGN OVERSIGHT | SCALE: AS SHOWN | VERT.DATUM: NAVD88 | HORZ.DATUM: NAD83 (92) | DESIGN | BY P. Shinn | CHECKED K. HARIRSAZ | PREPARED FOR THE STATE OF CALIFORNIA DEPARTMENT OF TRANSPORTATION |
| | PHOTOGRAMMETRY AS OF: JUNE 13, 2003 | ALIGNMENT TIES | | DETAILS | BY P. Shinn | CHECKED K. HARIRSAZ | |
| | SURVEYED BY RRM DESIGN GROUP | DRAFTED BY GOLDEN STATE AERIAL SURVEYS | | QUANTITIES | BY P. Shinn | CHECKED K. HARIRSAZ | |
| SIGN OFF DATE | FIELD CHECKED BY N. PASQUINI | CHECKED BY S. WEBSTER | | | | | |

K. HARIRSAZ
PROJECT ENGINEER

BRIDGE NO. N/A
POST MILES 6.45

# NIPOMO CREEK BRIDGE
# FOUNDATION PLAN

FOUNDATION PLAN SHEET (ENGLISH) (REV. 2/25/05)

ORIGINAL SCALE IN INCHES FOR REDUCED PLANS 0 1 2 3

CU 05
EA 474501

DISREGARD PRINTS BEARING EARLIER REVISION DATES

REVISION DATES (PRELIMINARY STAGE ONLY) 5/2009 1/8/10 4/30/10 7/16/10

SHEET 3 OF 11

FILE => $REQUEST

USERNAME => $USER DATE PLOTTED => $DATE TIME PLOTTED => $TIME

| DIST | COUNTY | ROUTE | POST MILES TOTAL PROJECT | SHEET No. | TOTAL SHEETS |
|---|---|---|---|---|---|
| 05 | SLO | 101 | | 232 | 290 |

REGISTERED STRUCTURAL ENGINEER

PLANS APPROVAL DATE

REGISTERED PROFESSIONAL ENGINEER PHILIP SHINN No. S4967 Exp. 12/31/10 STRUCTURAL STATE OF CALIFORNIA

*The State of California or its officers or agents shall not be responsible for the accuracy or completeness of electronic copies of this plan sheet.*

COUNTY OF SAN LUIS OBISPO
PUBLIC WORKS AND TRANSPORTATION DEPARTMENT
1050 MONTEREY STREET
SAN LUIS OBISPO, CA 93408

RAJAPPAN & MEYER
CONSULTING ENGINEERS, INC.
1038 LEIGH AVE., SUITE 100
SAN JOSE, CA 95126

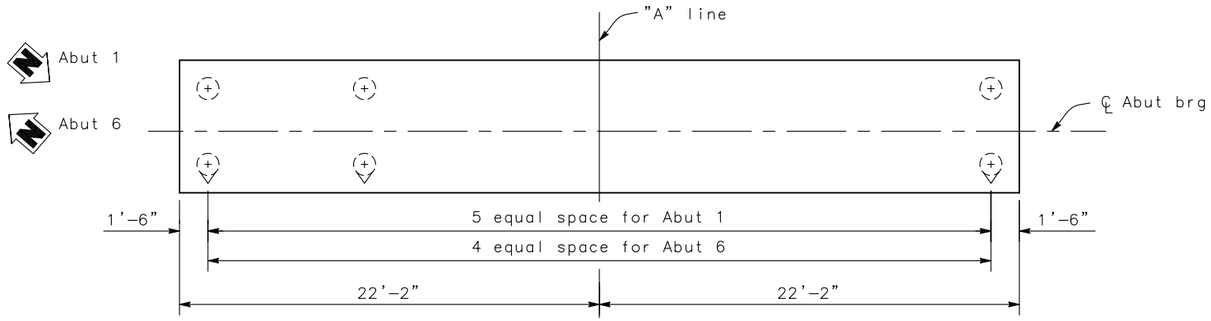


Note: Not all piles shown

**FOOTING PLAN**
1/4" = 1'-0"

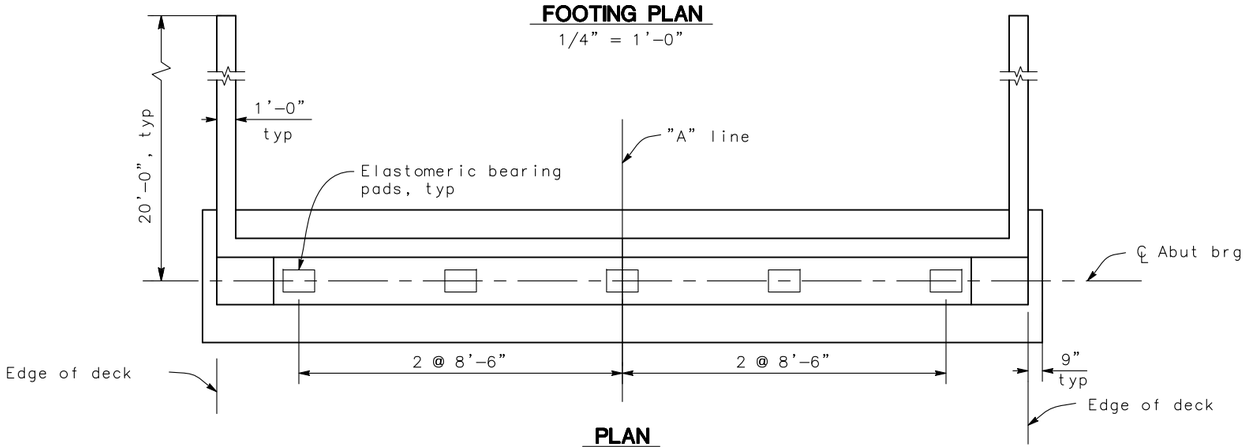


**PLAN**
1/4" = 1'-0"

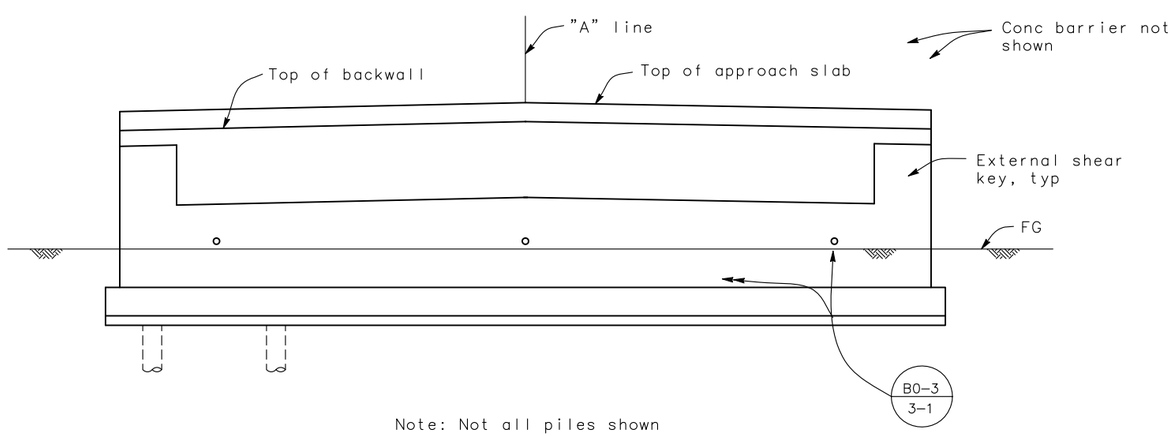


Note: Not all piles shown

**ELEVATION**
1/4" = 1'-0"

Notes:

1. For Abutment typical section and external shear key details, see 'Typical Section' on "Abutment Details" sheet.

(+) Indicates vertical pile
total 6 for abut 1
total 5 for abut 6

(+) Indicates battered pile
total 6 for abut 1
total 5 for abut 6

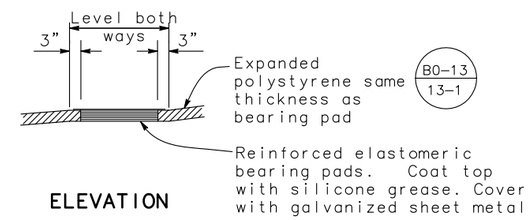


**ELEVATION**

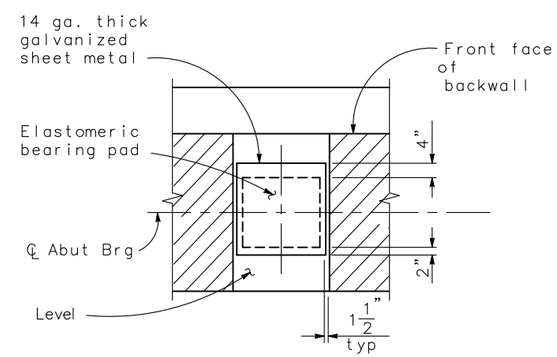


**PLAN**

**ELASTOMERIC BEARING PAD PLAN**
No Scale

| *Reinforced elastomeric bearing pads* | | |
|---|---|---|
| Location | Fabric | Steel |
| Abut 1 | 14"x22"x1.5" | 14"x22"x1.5" |
| Abut 6 | 12"x18"x1.5" | 12"x20"x1.5" |

THIS PLAN IS FOR BID ADDITIVE

THIS PLAN IS FOR COUNTY FACILITY

DESIGN OVERSIGHT

SIGN OFF DATE

| | BY | | CHECKED |
|---|---|---|---|
| DESIGN | P. Shinn | | K. HARIRSAZ |
| DETAILS | P. Shinn | | K. HARIRSAZ |
| QUANTITIES | P. Shinn | | K. HARIRSAZ |

PREPARED FOR THE STATE OF CALIFORNIA DEPARTMENT OF TRANSPORTATION

K. HARIRSAZ
PROJECT ENGINEER

BRIDGE NO. N/A
POST MILES 6.45

# NIPOMO CREEK BRIDGE
# ABUTMENT LAYOUT

DESIGN DETAIL SHEET (ENGLISH) (REV. 2/25/05)

ORIGINAL SCALE IN INCHES FOR REDUCED PLANS 0 1 2 3

CU 05
EA 474501

DISREGARD PRINTS BEARING EARLIER REVISION DATES

REVISION DATES (PRELIMINARY STAGE ONLY) 5/2009 1/8/10 4/30/10 7/16/10

SHEET 4 OF 11

FILE => $REQUEST

USERNAME => $USER DATE PLOTTED => $DATE TIME PLOTTED => $TIME

| DIST | COUNTY | ROUTE | POST MILES TOTAL PROJECT | SHEET No. | TOTAL SHEETS |
|---|---|---|---|---|---|
| 05 | SLO | 101 | | 233 | 290 |

REGISTERED STRUCTURAL ENGINEER

PLANS APPROVAL DATE

REGISTERED PROFESSIONAL ENGINEER PHILIP SHINN No. S4967 Exp. 12/31/10 STRUCTURAL STATE OF CALIFORNIA

*The State of California or its officers or agents shall not be responsible for the accuracy or completeness of electronic copies of this plan sheet.*

COUNTY OF SAN LUIS OBISPO
PUBLIC WORKS AND TRANSPORTATION DEPARTMENT
1050 MONTEREY STREET
SAN LUIS OBISPO, CA 93408

RAJAPPAN & MEYER
CONSULTING ENGINEERS, INC.
1038 LEIGH AVE, SUITE 100
SAN JOSE, CA 95126

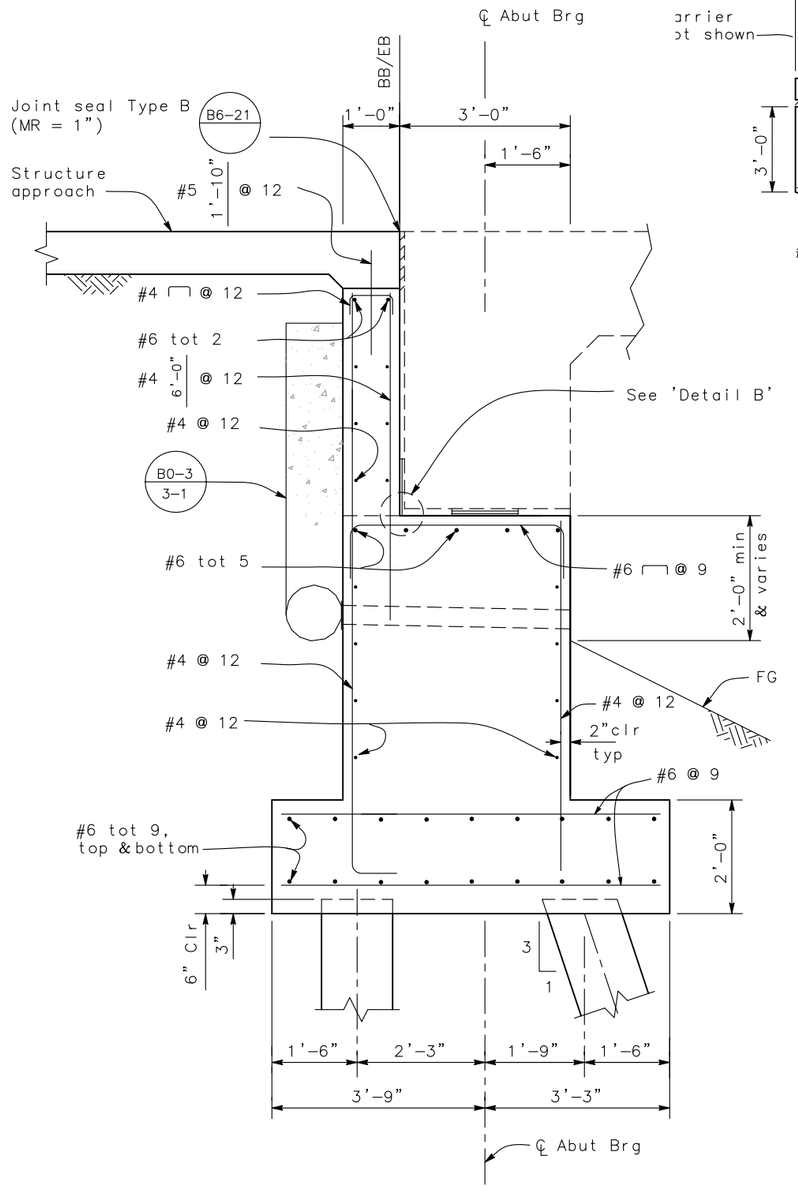


**TYPICAL SECTION** B2-8
3/4" = 1'-0"

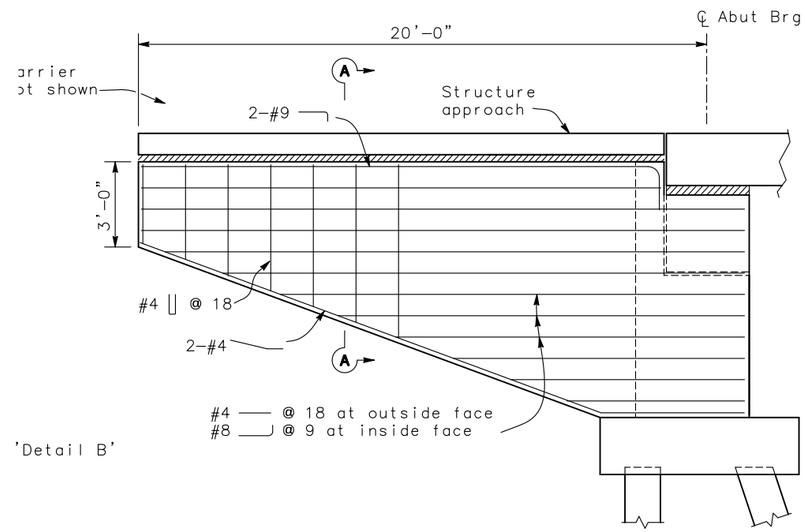


**WINGWALL ELEVATION**
3/8" = 1'-0"

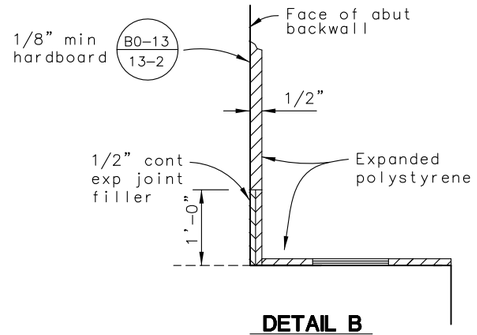


**DETAIL B**
No Scale

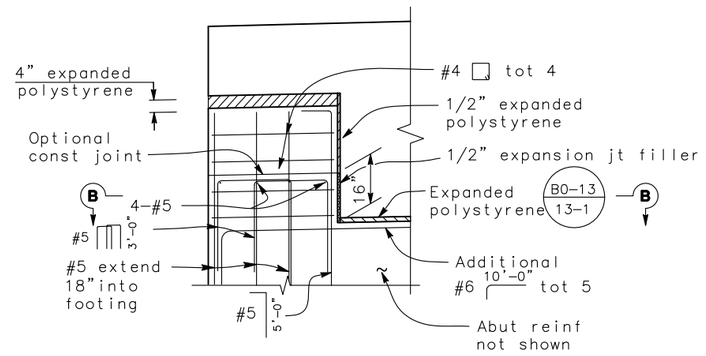


**EXTERNAL SHEAR KEY**
1/2" = 1'-0"

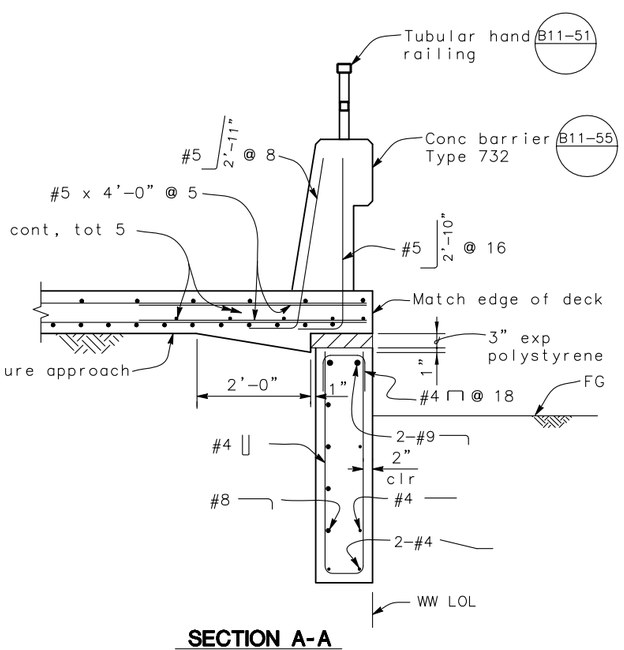


**SECTION A-A**
3/4" = 1'-0"

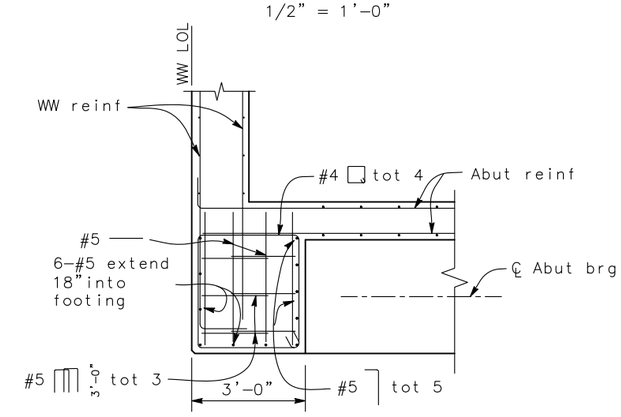


Note: One side external key shown, the other side similar.

**SECTION B-B**
1/2" = 1'-0"

THIS PLAN IS FOR BID ADDITIVE

THIS PLAN IS FOR COUNTY FACILITY

DESIGN OVERSIGHT

SIGN OFF DATE

DESIGN DETAIL SHEET (ENGLISH) (REV. 2/25/05)

| | BY | CHECKED |
|---|---|---|
| DESIGN | P. Shinn | K. HARIRSAZ |
| DETAILS | P. Shinn | K. HARIRSAZ |
| QUANTITIES | P. Shinn | K. HARIRSAZ |

ORIGINAL SCALE IN INCHES FOR REDUCED PLANS 0 1 2 3

PREPARED FOR THE STATE OF CALIFORNIA DEPARTMENT OF TRANSPORTATION

K. HARIRSAZ
PROJECT ENGINEER

CU 05
EA 474501

FILE => $REQUEST

BRIDGE NO. N/A
POST MILES 6.45

# NIPOMO CREEK BRIDGE
# ABUTMENT DETAILS

DISREGARD PRINTS BEARING EARLIER REVISION DATES

REVISION DATES (PRELIMINARY STAGE ONLY): 5/2009 1/8/10 4/30/10 7/16/10

SHEET 5 OF 11

USERNAME => $USER DATE PLOTTED => $DATE TIME PLOTTED => $TIME

| DIST | COUNTY | ROUTE | POST MILES TOTAL PROJECT | SHEET No. | TOTAL SHEETS |
|---|---|---|---|---|---|
| 05 | SLO | 101 | | 234 | 290 |

REGISTERED STRUCTURAL ENGINEER

PLANS APPROVAL DATE

REGISTERED PROFESSIONAL ENGINEER PHILIP SHINN No. S4967 Exp. 12/31/10 STRUCTURAL STATE OF CALIFORNIA

*The State of California or its officers or agents shall not be responsible for the accuracy or completeness of electronic copies of this plan sheet.*

COUNTY OF SAN LUIS OBISPO
PUBLIC WORKS AND TRANSPORTATION DEPARTMENT
1050 MONTEREY STREET
SAN LUIS OBISPO, CA 93408

RAJAPPAN & MEYER
CONSULTING ENGINEERS, INC.
1038 LEIGH AVE, SUITE 100
SAN JOSE, CA 95126

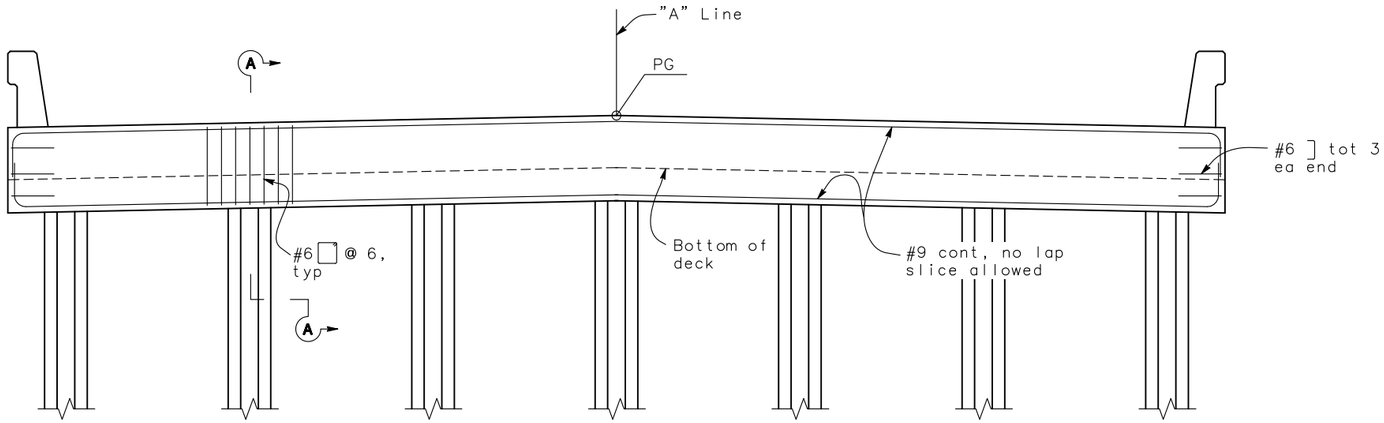


**ELEVATION**
3/8" = 1'-0"

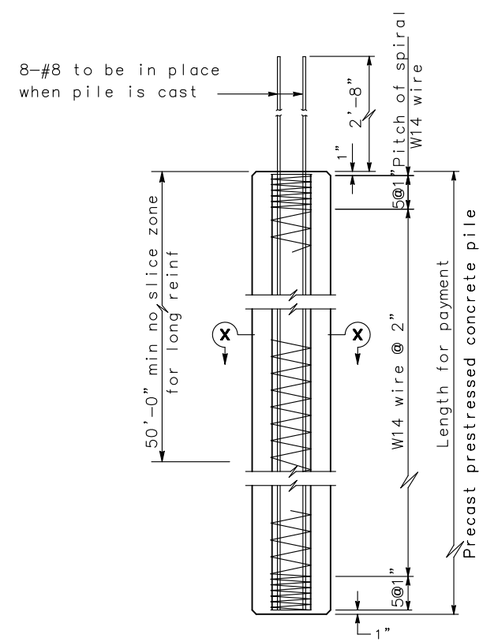


**PILE ELEVATION**
No Scale

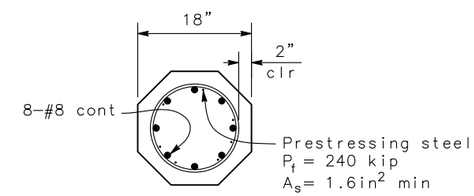


**SECTION X-X**
No Scale

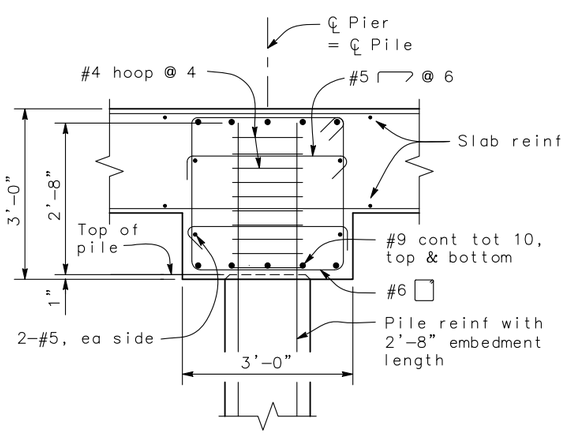


**SECTION A-A**
3/4" = 1'-0"

PRECAST PRESTRESSED PILES

$P_f$ = Prestress Force (After losses)

Concrete Strength $f'_c$ @ 28 days = 6,000 psi
$f'_{ci}$ @ transfer = 4,000 psi

NOTES:

1. Concrete in piles shall contain not less than 752 pounds of cement per cubic yard.
2. Lapped splices in spiral pile reinforcement shall be lapped 80 wire diameters minimum. Spiral pile reinforcement at splices and at ends shall be terminated by a 135° hook with 6" tail hooked around a longitudinal bar or strand
3. Maximum cut-off length at the top of piles is 10'-0".

THIS PLAN IS FOR BID ADDITIVE

THIS PLAN IS FOR COUNTY FACILITY

| | | | | |
|---|---|---|---|---|
| DESIGN OVERSIGHT | DESIGN | BY P. Shinn | CHECKED K. HARIRSAZ | PREPARED FOR THE STATE OF CALIFORNIA DEPARTMENT OF TRANSPORTATION |
| SIGN OFF DATE | DETAILS | BY P. Shinn | CHECKED K. HARIRSAZ | |
| | QUANTITIES | BY P. Shinn | CHECKED K. HARIRSAZ | |

K. HARIRSAZ
PROJECT ENGINEER

BRIDGE NO. N/A
POST MILES 6.45

# NIPOMO CREEK BRIDGE
# PIER AND PILE DETAILS

DESIGN DETAIL SHEET (ENGLISH) (REV. 2/25/05)

ORIGINAL SCALE IN INCHES FOR REDUCED PLANS 0 1 2 3

CU 05
EA 474501

DISREGARD PRINTS BEARING EARLIER REVISION DATES

REVISION DATES (PRELIMINARY STAGE ONLY): 5/2009 1/8/10 4/30/10 7/16/10

SHEET 6 OF 11

FILE => $REQUEST

USERNAME => $USER DATE PLOTTED => $DATE TIME PLOTTED => $TIME

| DIST | COUNTY | ROUTE | POST MILES TOTAL PROJECT | SHEET No. | TOTAL SHEETS |
|---|---|---|---|---|---|
| 05 | SLO | 101 | | 235 | 290 |

REGISTERED STRUCTURAL ENGINEER

PLANS APPROVAL DATE

REGISTERED PROFESSIONAL ENGINEER PHILIP SHINN No. S4967 Exp. 12/31/10 STRUCTURAL STATE OF CALIFORNIA

*The State of California or its officers or agents shall not be responsible for the accuracy or completeness of electronic copies of this plan sheet.*

COUNTY OF SAN LUIS OBISPO
PUBLIC WORKS AND TRANSPORTATION DEPARTMENT
1050 MONTEREY STREET
SAN LUIS OBISPO, CA 93408

RAJAPPAN & MEYER
CONSULTING ENGINEERS, INC.
1038 LEIGH AVE, SUITE 100
SAN JOSE, CA 95126

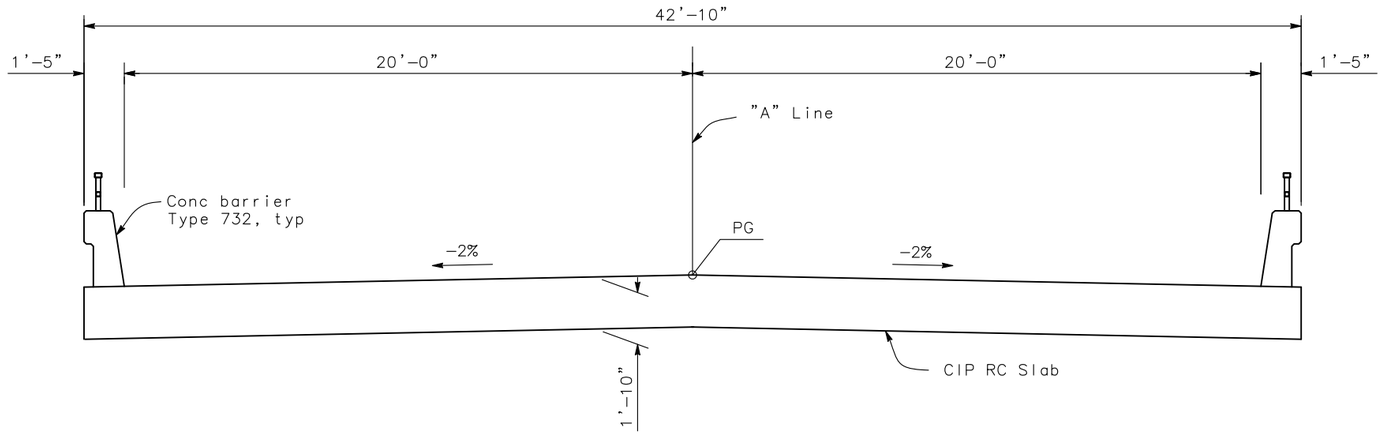


**TYPICAL SECTION**
3/8" = 1'-0"

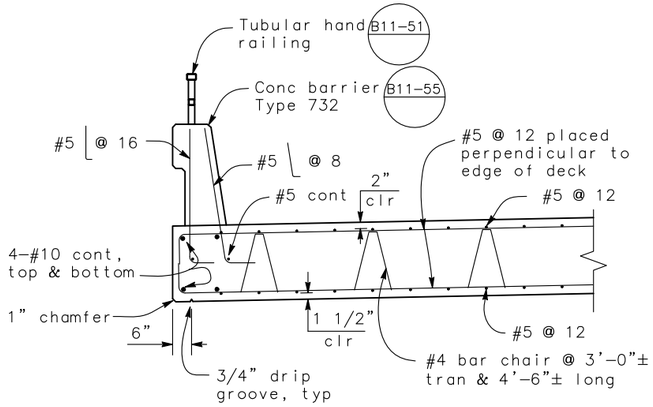


**PART SECTION**
1/2" = 1'-0"

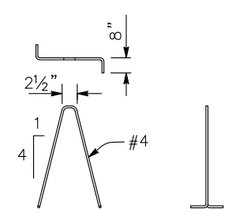


**BAR CHAIR DETAIL**
No Scale

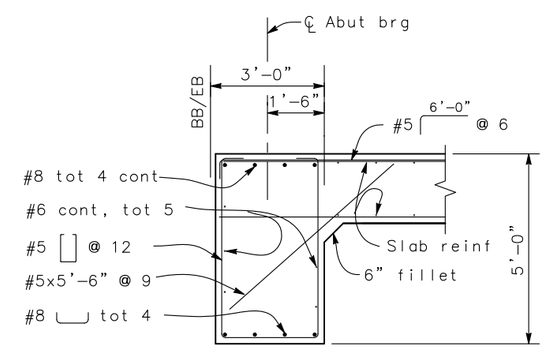


**END DIAPHRAGM**
1/2" = 1'-0"

THIS PLAN IS FOR BID ADDITIVE

THIS PLAN IS FOR COUNTY FACILITY

DESIGN OVERSIGHT

SIGN OFF DATE

| | BY | CHECKED |
|---|---|---|
| DESIGN | P. Shinn | K. HARIRSAZ |
| DETAILS | P. Shinn | K. HARIRSAZ |
| QUANTITIES | P. Shinn | K. HARIRSAZ |

PREPARED FOR THE STATE OF CALIFORNIA DEPARTMENT OF TRANSPORTATION

K. HARIRSAZ
PROJECT ENGINEER

BRIDGE NO. N/A
POST MILES 6.45

# NIPOMO CREEK BRIDGE
## TYPICAL SECTION

DESIGN DETAIL SHEET (ENGLISH) (REV. 2/25/05)

ORIGINAL SCALE IN INCHES FOR REDUCED PLANS 0 1 2 3

CU 05
EA 474501

DISREGARD PRINTS BEARING EARLIER REVISION DATES

REVISION DATES (PRELIMINARY STAGE ONLY): 5/2009 1/8/10 4/30/10 7/16/10

SHEET 7 OF 11

FILE => $REQUEST

USERNAME => $USER DATE PLOTTED => $DATE TIME PLOTTED => $TIME

| DIST | COUNTY | ROUTE | POST MILES TOTAL PROJECT | SHEET No. | TOTAL SHEETS |
|---|---|---|---|---|---|
| 05 | SLO | 101 | | 236 | 290 |

REGISTERED STRUCTURAL ENGINEER

PLANS APPROVAL DATE

REGISTERED PROFESSIONAL ENGINEER PHILIP SHINN No. S4967 Exp. 12/31/10 STRUCTURAL STATE OF CALIFORNIA

*The State of California or its officers or agents shall not be responsible for the accuracy or completeness of electronic copies of this plan sheet.*

COUNTY OF SAN LUIS OBISPO
PUBLIC WORKS AND TRANSPORTATION DEPARTMENT
1050 MONTEREY STREET
SAN LUIS OBISPO, CA 93408

RAJAPPAN & MEYER
CONSULTING ENGINEERS, INC.
1038 LEIGH AVE, SUITE 100
SAN JOSE, CA 95126

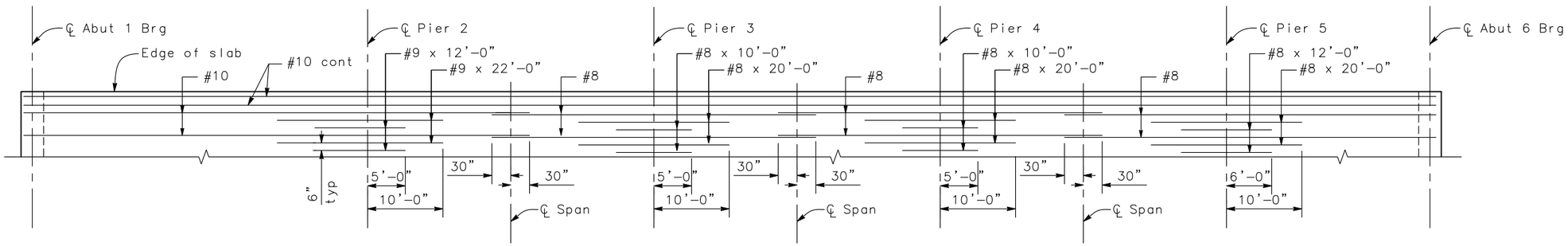


## TOP SLAB REINFORCEMENT

No Scale

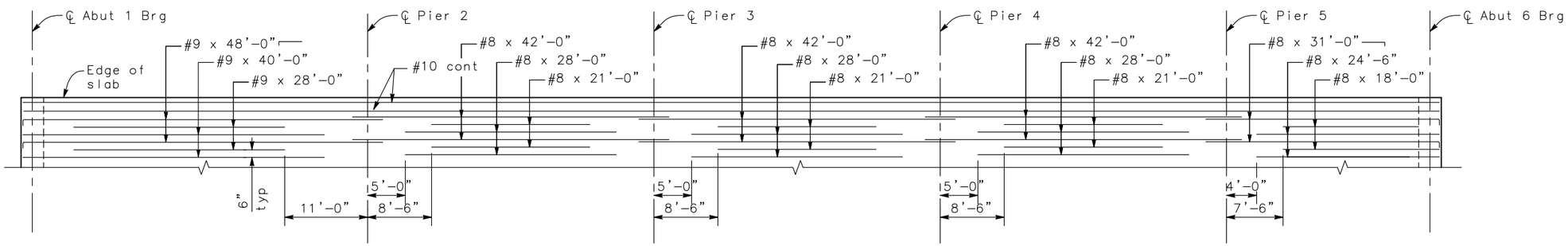


## BOTTOM SLAB REINFORCEMENT

No Scale

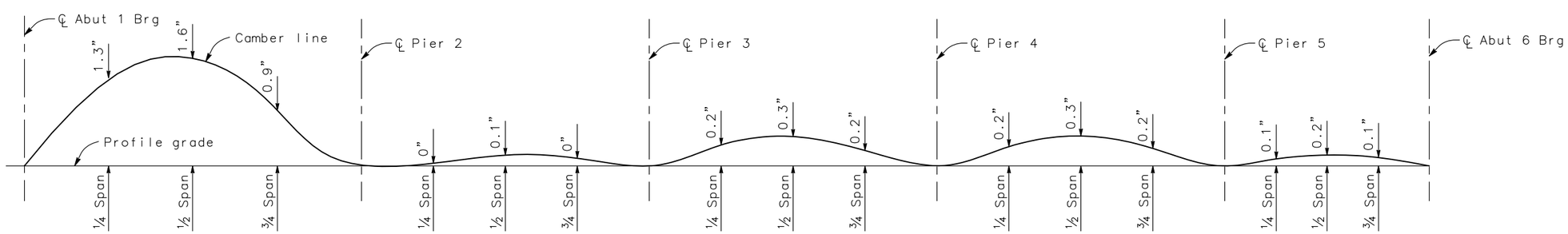


Does not include allawable for falsework deflection and settlemwnt.

## CAMBER DIAGRAM

No Scale

THIS PLAN IS FOR BID ADDITIVE

THIS PLAN IS FOR COUNTY FACILITY

| | | | | | |
|---|---|---|---|---|---|
| DESIGN OVERSIGHT | DESIGN | BY P. Shinn | CHECKED K. HARIRSAZ | PREPARED FOR THE STATE OF CALIFORNIA DEPARTMENT OF TRANSPORTATION | K. HARIRSAZ PROJECT ENGINEER |
| SIGN OFF DATE | DETAILS | BY P. Shinn | CHECKED K. HARIRSAZ | | |
| | QUANTITIES | BY P. Shinn | CHECKED K. HARIRSAZ | | |

BRIDGE NO. N/A

POST MILES 6.45

# NIPOMO CREEK BRIDGE

# SLAB REINFORCEMENT

DESIGN DETAIL SHEET (ENGLISH) (REV. 2/25/05)

ORIGINAL SCALE IN INCHES FOR REDUCED PLANS 0 1 2 3

CU 05
EA 474501

FILE => $REQUEST

DISREGARD PRINTS BEARING EARLIER REVISION DATES

REVISION DATES (PRELIMINARY STAGE ONLY) 5/2009 1/8/10 4/30/10 7/16/10

SHEET 8 OF 11

USERNAME => $USER DATE PLOTTED => $DATE TIME PLOTTED => $TIME

| DIST | COUNTY | ROUTE | POST MILES TOTAL PROJECT | SHEET No. | TOTAL SHEETS |
|---|---|---|---|---|---|
| 05 | SLO | 101 | | 237 | 290 |

REGISTERED STRUCTURAL ENGINEER

PLANS APPROVAL DATE

REGISTERED PROFESSIONAL ENGINEER PHILIP SHINN No. S4967 Exp. 12/31/10 STRUCTURAL STATE OF CALIFORNIA

*The State of California or its officers or agents shall not be responsible for the accuracy or completeness of electronic copies of this plan sheet.*

COUNTY OF SAN LUIS OBISPO
PUBLIC WORKS AND TRANSPORTATION DEPARTMENT
1050 MONTEREY STREET
SAN LUIS OBISPO, CA 93408

RAJAPPAN & MEYER
CONSULTING ENGINEERS, INC.
1038 LEIGH AVE, SUITE 100
SAN JOSE, CA 95126

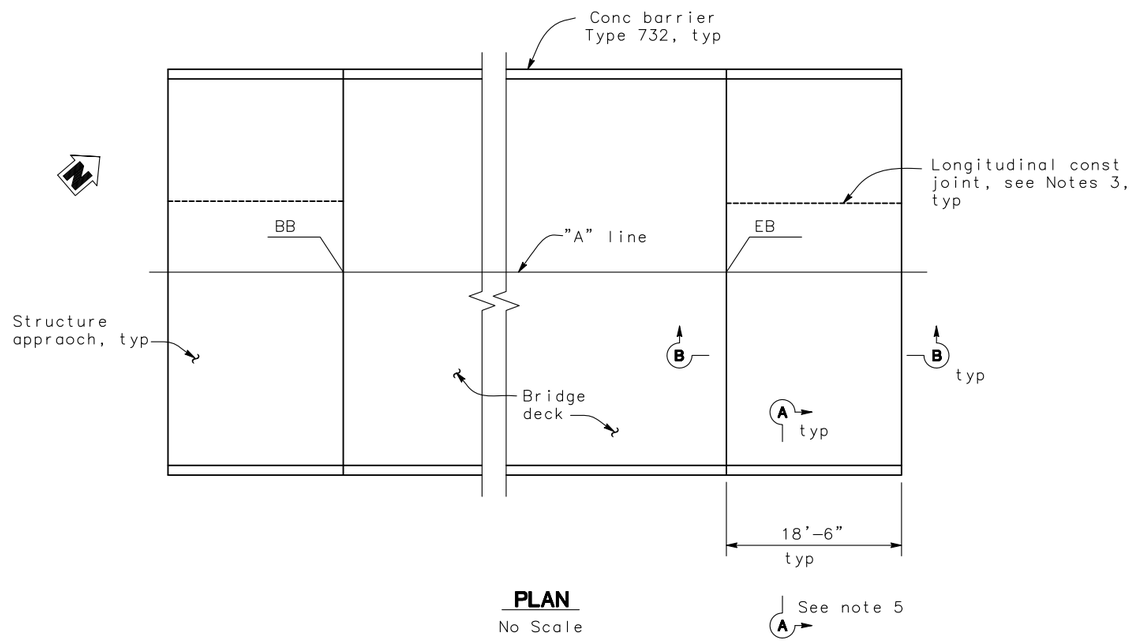


**PLAN**
No Scale

NOTES:

1. For details not noted or shown, see Structure Plans. Adjust bar reinforcement to clear a sawcut for sealed joint, when required.
2. For transverse contact joint with nee PCC paving, refer to Standard Plan P10.
3. Longitudinal construction joints, when permitted by the Engineer, shall be located on lane lines.
4. At the contractor's option, approach slab transverse reinforcement may be placed parallel to paving notch. Spacing of transverse reinforcement is measured along ℄ roadway.
5. For 'Section A-A', see "Abutment Details" sheet.

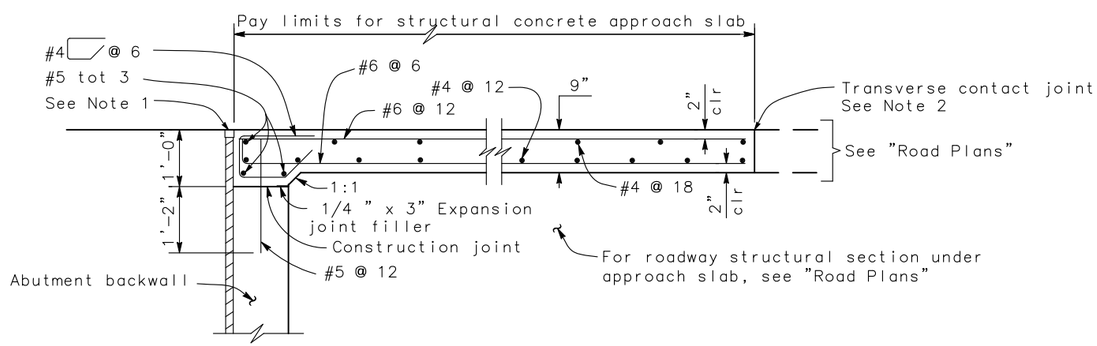


**SECTION B-B**
3/4" = 1'-0"

THIS PLAN IS FOR BID ADDITIVE

THIS PLAN IS FOR COUNTY FACILITY

DESIGN OVERSIGHT

SIGN OFF DATE

| | BY | | CHECKED |
|---|---|---|---|
| DESIGN | P. Shinn | | K. HARIRSAZ |
| DETAILS | P. Shinn | | K. HARIRSAZ |
| QUANTITIES | P. Shinn | | K. HARIRSAZ |

PREPARED FOR THE STATE OF CALIFORNIA DEPARTMENT OF TRANSPORTATION

K. HARIRSAZ
PROJECT ENGINEER

BRIDGE NO. N/A
POST MILES 6.45

**NIPOMO CREEK BRIDGE**
**STRUCTURE APPROACH**

DESIGN DETAIL SHEET (ENGLISH) (REV. 2/25/05)

ORIGINAL SCALE IN INCHES FOR REDUCED PLANS 0 1 2 3

CU 05
EA 474501

DISREGARD PRINTS BEARING EARLIER REVISION DATES

REVISION DATES (PRELIMINARY STAGE ONLY): ~~5/2009~~ ~~1/8/10~~ ~~4/30/10~~ 7/16/10

SHEET 9 OF 11

FILE => $REQUEST

USERNAME => $USER DATE PLOTTED => $DATE TIME PLOTTED => $TIME

| DIST | COUNTY | ROUTE | POST MILES TOTAL PROJECT | SHEET No | TOTAL SHEETS |
|---|---|---|---|---|---|
| 05 | SLO | RTE 101 | – | 238 | 290 |

GEOTECHNICAL PROFESSIONAL DATE

PLANS APPROVAL DATE

REGISTERED PROFESSIONAL ENGINEER GARY PARIKH No. G.E. 666 Exp. 12/31/09 GEOTECHNICAL STATE OF CALIFORNIA

The County of San Luis Obispo or its officers or agents shall not be responsible for the accuracy or completeness of electronic copies of this plan sheet.

PARIKH CONSULTANTS, INC.
2360 QUME DRIVE, SUITE A
SAN JOSE, CA 95131

REFERENCE: CALTRANS SOIL & ROCK LOGGING, CLASSIFICATION, AND PRESENTATION MANUAL (JUNE 2007)

## GROUP SYMBOLS AND NAMES

| Graphic/Symbol | Group Names | Graphic/Symbol | Group Names |
|---|---|---|---|
| GW | Well-graded GRAVEL<br>Well-graded GRAVEL with SAND | CL | Lean CLAY<br>Lean CLAY with SAND<br>Lean CLAY with GRAVEL<br>SANDY lean CLAY<br>SANDY lean CLAY with GRAVEL<br>GRAVELLY lean CLAY with SAND |
| GP | Poorly graded GRAVEL<br>Poorly graded GRAVEL with SAND | | |
| GW-GM | Well-graded GRAVEL with SILT<br>Well-graded GRAVEL with SILT and SAND | CL-ML | SILTY CLAY<br>SILTY CLAY with SAND<br>SILTY CLAY with GRAVEL<br>SANDY SILTY CLAY<br>SANDY SILTY CLAY with GRAVEL<br>GRAVELLY SILTY CLAY<br>GRAVELLY SILTY CLAY with SAND |
| GW-GC | Well-graded GRAVEL with CLAY (or SILTY CLAY)<br>Well-graded GRAVEL with CLAY and SAND (or SILTY CLAY and SAND) | | |
| GP-GM | Poorly graded GRAVEL with SILT<br>Poorly graded GRAVEL with SILT and SAND | ML | SILT<br>SILT with SAND<br>SILT with GRAVEL<br>SANDY SILT<br>SANDY SILT with GRAVEL<br>GRAVELLY SILT<br>GRAVELLY SILT with SAND |
| GP-GC | Poorly graded GRAVEL with CLAY (or SILTY CLAY)<br>Poorly graded GRAVEL with CLAY and SAND (or SILTY CLAY and SAND) | | |
| GM | SILTY GRAVEL<br>SILTY GRAVEL with SAND | OL | ean CLAY with GRAVEL |
| GC | CLAYEY GRAVEL<br>CLAYEY GRAVEL with SAND | | |
| GC-GM | SILTY, CLAYEY GRAVEL<br>SILTY, CLAYEY GRAVEL with SAND | OL | ORGANIC SILT<br>ORGANIC SILT with SAND<br>ORGANIC SILT with GRAVEL<br>SANDY ORGANIC SILT<br>SANDY ORGANIC SILT with GRAVEL<br>GRAVELLY ORGANIC SILT<br>GRAVELLY ORGANIC SILT with SAND |
| SW | Well-graded SAND<br>Well-graded SAND with GRAVEL | | |
| SP | Poorly graded SAND<br>Poorly graded SAND with GRAVEL | CH | Fat CLAY<br>Fat CLAY with SAND<br>Fat CLAY with GRAVEL<br>SANDY fat CLAY<br>SANDY fat CLAY with GRAVEL<br>GRAVELLY fat CLAY<br>GRAVELLY fat CLAY with SAND |
| SW-SM | Well-graded SAND with SILT<br>Well-graded SAND with SILT and GRAVEL | | |
| SW-SC | Well-graded SAND with CLAY (or SILTY CLAY)<br>Well-graded SAND with CLAY and GRAVEL (or SILTY CLAY and GRAVEL) | MH | Elastic SILT<br>Elastic SILT with SAND<br>Elastic SILT with GRAVEL<br>SANDY elastic SILT<br>SANDY elastic SILT with GRAVEL<br>GRAVELLY elastic SILT<br>GRAVELLY elastic SILT with SAND |
| SP-SM | Poorly graded SAND with SILT<br>Poorly graded SAND with SILT and GRAVEL | | |
| SP-SC | Poorly graded SAND with CLAY (or SILTY CLAY)<br>Poorly graded SAND with CLAY and GRAVEL (or SILTY CLAY and GRAVEL) | OH | ORGANIC fat CLAY<br>ORGANIC fat CLAY with SAND<br>ORGANIC fat CLAY with GRAVEL |
| SM | SILTY SAND<br>SILTY SAND with GRAVEL | | GRAVELLY ORGANIC fa |
| SC | CLAYEY SAND<br>CLAYEY SAND with GRAVEL | OH | ORGANIC elastic SILT<br>ORGANIC elastic SILT with SAND<br>ORGANIC elastic SILT with GRAVEL<br>SANDY ORGANIC elastic SILT<br>SANDY ORGANIC elastic SILT with GRAVEL<br>GRAVELLY ORGANIC elastic SILT<br>GRAVELLY ORGANIC elastic SILT with SAND |
| SC-SM | SILTY, CLAYEY SAND<br>SILTY, CLAYEY SAND with GRAVEL | | |
| PT | PEAT | OL/OH | ORGANIC SOIL<br>ORGANIC SOIL with SAND<br>ORGANIC SOIL with GRAVEL<br>SANDY ORGANIC SOIL<br>SANDY ORGANIC SOIL with GRAVEL<br>GRAVELLY ORGANIC SOIL<br>GRAVELLY ORGANIC SOIL with SAND |
| | COBBLES<br>COBBLES and BOULDERS<br>BOULDERS | | |

## FIELD AND LABORATORY TESTING

- (C) Consolidation (ASTM D 2435)
- (CL) Collapse Potential (ASTM D 5333)
- (CP) Compaction Curve (CTM 216)
- (CR) Corrosivity Testing (CTM 643, CTM 422, CTM 417)
- (CU) Consolidated Undrained Triaxial (ASTM D 4767)
- (DS) Direct Shear (ASTM D 3080)
- (EI) Expansion Index (ASTM D 4829)
- (M) Moisture Content (ASTM D 2216)
- (OC) Organic Content-% (ASTM D 2974)
- (P) Permeability (CTM 220)
- (PA) Particle Size Analysis (ASTM D 422)
- (PI) Plasticity Index (AASHTO T 90) Liquid Limit (AASHTO T 89)
- (PL) Point Load Index (ASTM D 5731)
- (PM) Pressure Meter
- (PP) Pocket Penetrometer
- (R) R-Value (CTM 301)
- (SE) Sand Equivalent (CTM 217)
- (SG) Specific Gravity (AASHTO T 100)
- (SL) Shrinkage Limit (ASTM D 427)
- (SW) Swell Potential (ASTM D 4546)
- (TV) Pocket Torvane
- (UC) Unconfined Compression-Soil (ASTM D 2166) Unconfined Compression-Rock (ASTM D 2938)
- (UU) Unconsolidated Undrained Triaxial (ASTM D 2850)
- (UW) Unit Weight (ASTM D 4767)
- (VS) Vane Shear (AASHTO T 223)

## APPARENT DENSITY OF COHESIONLESS SOILS

| Description | SPT $N_{60}$ (Blows / 12 inches) |
|---|---|
| Very loose | 0 – 4 |
| Loose | 5 – 10 |
| Medium Dense | 11 – 30 |
| Dense | 31 – 50 |
| Very Dense | > 50 |

## MOISTURE

| Description | Criteria |
|---|---|
| Dry | Absence of moisture, dusty, dry to the touch |
| Moist | Damp but no visible water |
| Wet | Visible free water, usually soil is below water table |

## PERCENT OR PROPORTION OF SOILS

| Description | Criteria |
|---|---|
| Trace | Particles are present but estimated to be less than 5% |
| Few | 5 to 10% |
| Little | 15 to 25% |
| Some | 30 to 45% |
| Mostly | 50 to 100% |

## PARTICLE SIZE

| Description | | Size |
|---|---|---|
| Boulder | | > 12" |
| Cobble | | 3" to 12" |
| Gravel | Coarse | 3/4" to 3" |
| | Fine | No. 4 to 3/4" |
| Sand | Coarse | No. 10 to No. 4 |
| | Medium | No. 40 to No. 10 |
| | Fine | No. 200 to No. 40 |

## CEMENTATION

| Description | Criteria |
|---|---|
| Weak | Crumbles or breaks with handling or little finger pressure. |
| Moderate | Crumbles or breaks with considerable finger pressure. |
| Strong | Will not crumble or break with finger pressure. |

## CONSISTENCY OF COHESIVE SOILS

| Description | Unconfined Compressive Strength (tsf) | Pocket Penetrometer Measurement (tsf) | Torvane Measurement (tsf) | Field Approximation |
|---|---|---|---|---|
| Very Soft | < 0.25 | < 0.25 | < 0.12 | Easily penetrated several inches by fist |
| Soft | 0.25 to 0.50 | 0.25 to 0.50 | 0.12 to 0.25 | Easily penetrated several inches by thumb |
| Medium Stiff | 0.50 to 1.0 | 0.50 to 1.0 | 0.25 to 0.50 | Penetrated several inches by thumb with moderate effort |
| Stiff | 1 to 2 | 1 to 2 | 0.50 to 1.0 | Readily indented by thumb but penetrated only with great effort |
| Very Stiff | 2 to 4 | 2 to 4 | 1.0 to 2.0 | Readily indented by thumbnail |
| Hard | > 4.0 | > 4.0 | > 2.0 | Indented by thumbnail with difficulty |

## PLASTICITY OF FINE-GRAINED SOILS

| Description | Criteria |
|---|---|
| Nonplastic | A 1/8-inch thread cannot be rolled at any water content. |
| Low | The thread can barely be rolled and the lump cannot be formed when drier than the plastic limit. |
| Medium | The thread is easy to roll and not much time is required to reach the plastic limit. The thread cannot be rerolled after reaching the plastic limit. The lump crumbles when drier than the plastic limit. |
| High | It takes considerable time rolling and kneading to reach the plastic limit. The thread can be rerolled several times after reaching the plastic limit. The lump can be formed without crumbling when drier than the plastic limit. |

## BOREHOLE IDENTIFICATION

| Symbol | Hole Type | Description |
|---|---|---|
| Size | A | Auger Boring |
| Size | R<br>P | Rotary drilled boring<br>Rotary percussion boring (air) |
| Size | R | Rotary drilled diamond core |
| Size | HD<br>HA | Hand driven (1-inch soil tube)<br>Hand Auger |
| ● | D | Dynamic Cone Penetration Boring |
| ▲ | CPT | Cone Penetration Test (ASTM D 5778-95) |
| □ | O | Other |

Note: Size in inches.

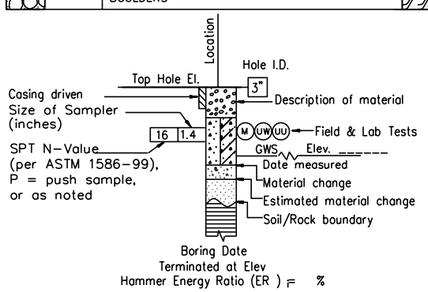


ROTARY BORING

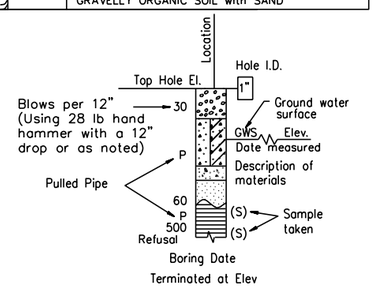


HAND BORING

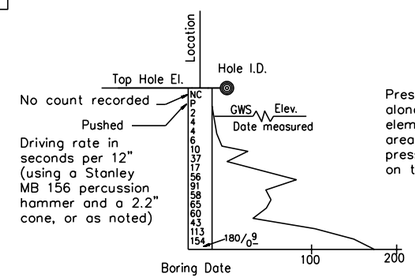


DYNAMIC CONE PENETRATION BORING

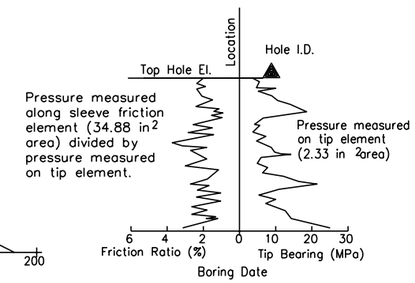


CONE PENETRATION TEST (CPT) SOUNDING

X
DESIGN OVERSIGHT

X
SIGN OFF DATE

| | | | |
|---|---|---|---|
| DRAWN BY | LAM TRAN | L. Bhangoo<br>FIELD INVESTIGATION BY: | |
| CHECKED BY | PERRY CHAN | DATE: Jan 2007 | |

PREPARED FOR THE
COUNTY OF SAN LUIS OBISPO
DEPARTMENT OF PUBLIC WORKS

PERRY CHAN
PROJECT ENGINEER

BRIDGE NO. –
POST MILE –

# NIPOMO CREEK BRIDGE

# LOG OF TEST BORINGS 1 OF 2

OSF GEOTECHNICAL LOG OF TEST BORINGS SHEET (ENGLISH) (REV. 2/25/05)

ORIGINAL SCALE IN INCHES FOR REDUCED PLANS 0 1 2 3

CU
EA

FILE => $REQUEST

DISREGARD PRINTS BEARING EARLIER REVISION DATES

REVISION DATES (PRELIMINARY STAGE ONLY) 07/10/09 SHEET OF

USERNAME => $USER

| DIST | COUNTY | ROUTE | POST MILES TOTAL PROJECT | SHEET No | TOTAL SHEETS |
|---|---|---|---|---|---|
| 05 | SLO | RTE 101 | – | 239 | 290 |

GEOTECHNICAL PROFESSIONAL DATE

PLANS APPROVAL DATE

REGISTERED PROFESSIONAL ENGINEER GARY PARIKH No. G.E. 666 Exp. 12/31/09 GEOTECHNICAL STATE OF CALIFORNIA

The County of San Luis Obispo or its officers or agents shall not be responsible for the accuracy or completeness of electronic copies of this plan sheet.

PARIKH CONSULTANTS, INC.
2360 QUME DRIVE, SUITE A
SAN JOSE, CA 95131

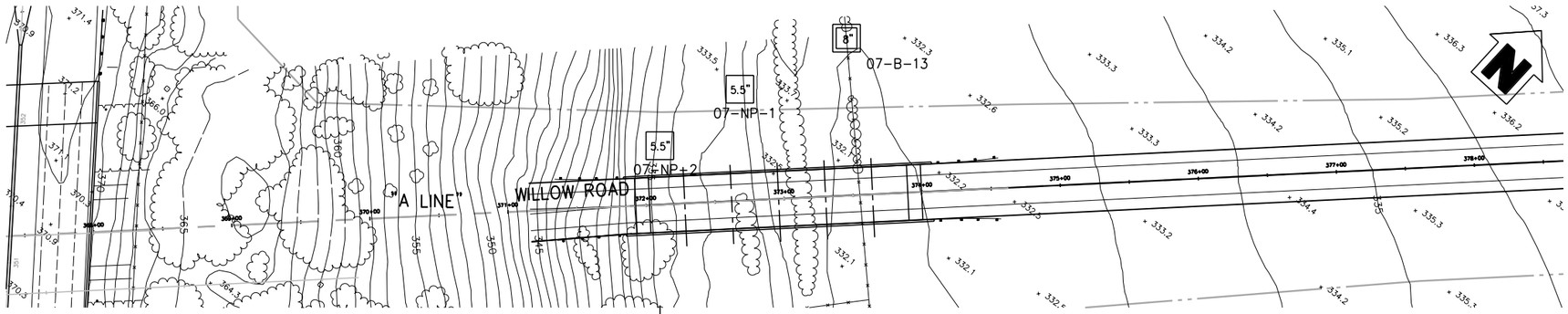


PLAN
1" = 50'

Notes:
Standard Penetration Test Sampler: I.D. = 1.4"; O.D. = 2"
Modified California Sampler: I.D. = 2.5"; O.D. = 3"
Hammer Assembly: A 140 lb hammer with a 30" drop

Borings 07-NP-2, 07-NP-1, and 07-B-13 were drilled in the county's right-of-way

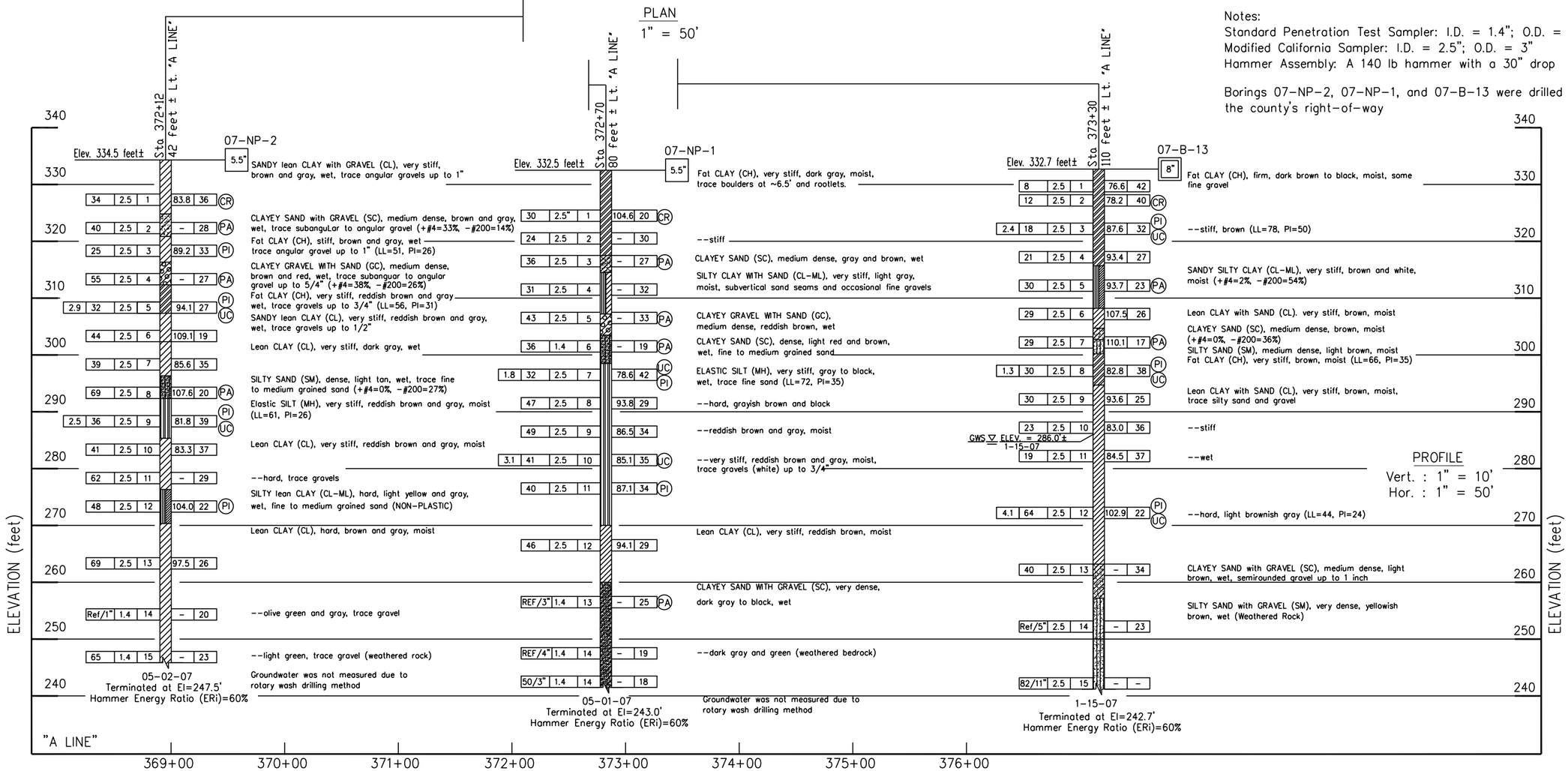


| | | | | | |
|---|---|---|---|---|---|
| X DESIGN OVERSIGHT | DRAWN BY | LAM TRAN | L. Bhangoo FIELD INVESTIGATION BY: | PREPARED FOR THE COUNTY OF SAN LUIS OBISPO DEPARTMENT OF PUBLIC WORKS | PERRY CHAN PROJECT ENGINEER |
| X SIGN OFF DATE | CHECKED BY | PERRY CHAN | DATE: Jan 2007 | | |

BRIDGE NO. –
POST MILE –

# NIPOMO CREEK BRIDGE
## LOG OF TEST BORINGS 2 OF 2

OSF GEOTECHNICAL LOG OF TEST BORINGS SHEET (ENGLISH) (REV. 2/25/05)

ORIGINAL SCALE IN INCHES FOR REDUCED PLANS 0 1 2 3

CU
EA

DISREGARD PRINTS BEARING EARLIER REVISION DATES 07/10/09

REVISION DATES (PRELIMINARY STAGE ONLY) SHEET OF

FILE => $REQUEST

USERNAME => $USER

| DIST | COUNTY | ROUTE | POST MILES TOTAL PROJECT | SHEET No | TOTAL SHEETS |
|---|---|---|---|---|---|
| 05 | SLO | 101 | 5.9/6.9 | 240 | 290 |

REGISTERED CIVIL ENGINEER — DATE 4/30/10

PLANS APPROVAL DATE

REGISTERED PROFESSIONAL ENGINEER ALLEN WANG No. C 66503 Exp. 06/30/12 Civil STATE OF CALIFORNIA

*The State of California or its officers or agents shall not be responsible for the accuracy or completeness of scanned copies of this plan sheet.*

COUNTY OF SAN LUIS OBISPO
PUBLIC WORKS AND TRANSPORTATION DEPARTMENT
1050 MONTEREY STREET
SAN LUIS OBISPO, CA 93408

RAJAPPAN & MEYER
CONSULTING ENGINEERS, INC.
1038 LEIGH AVE, SUITE 100
SAN JOSE, CA 95126

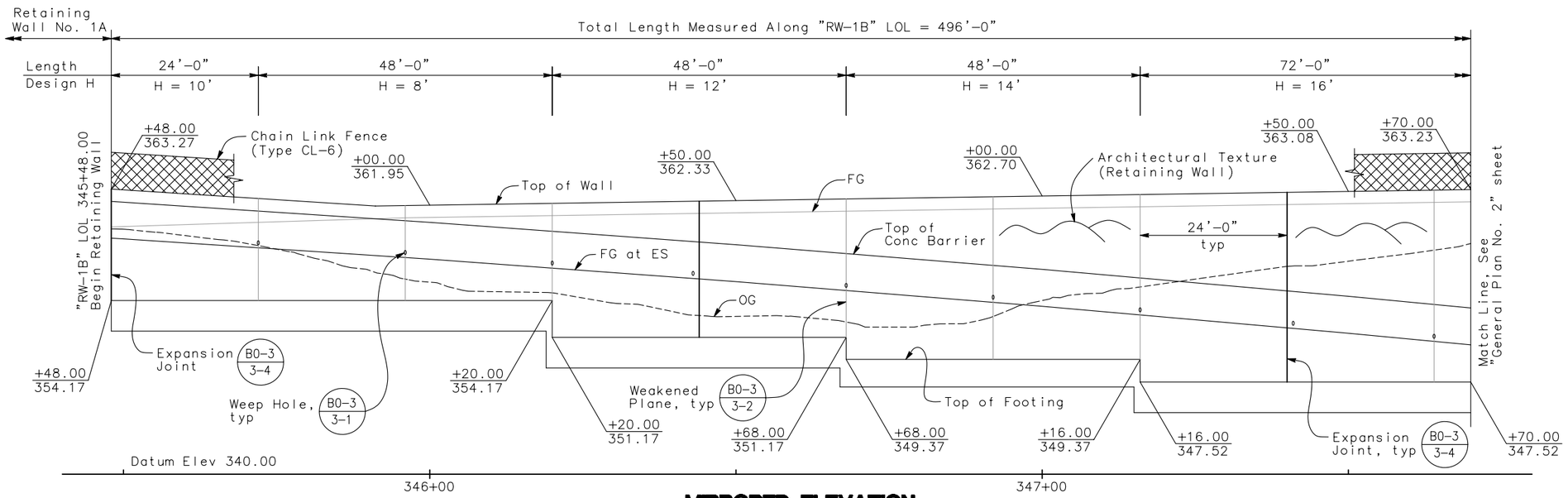


## MIRRORED ELEVATION

Scale: Horiz 1" = 10'
Verti 1" = 5'

Notes:

1. Tiedown anchors are not required from "RW-1B" 345+48.00 to 346+68.00 and "RW-1B" 350+28.00 to 350+44.00.
2. Tiedown anchor spacing measured along "RW-1B" line.
3. For Index to Plans and List of Standard Plans, see "General Plan No. 3" sheet.

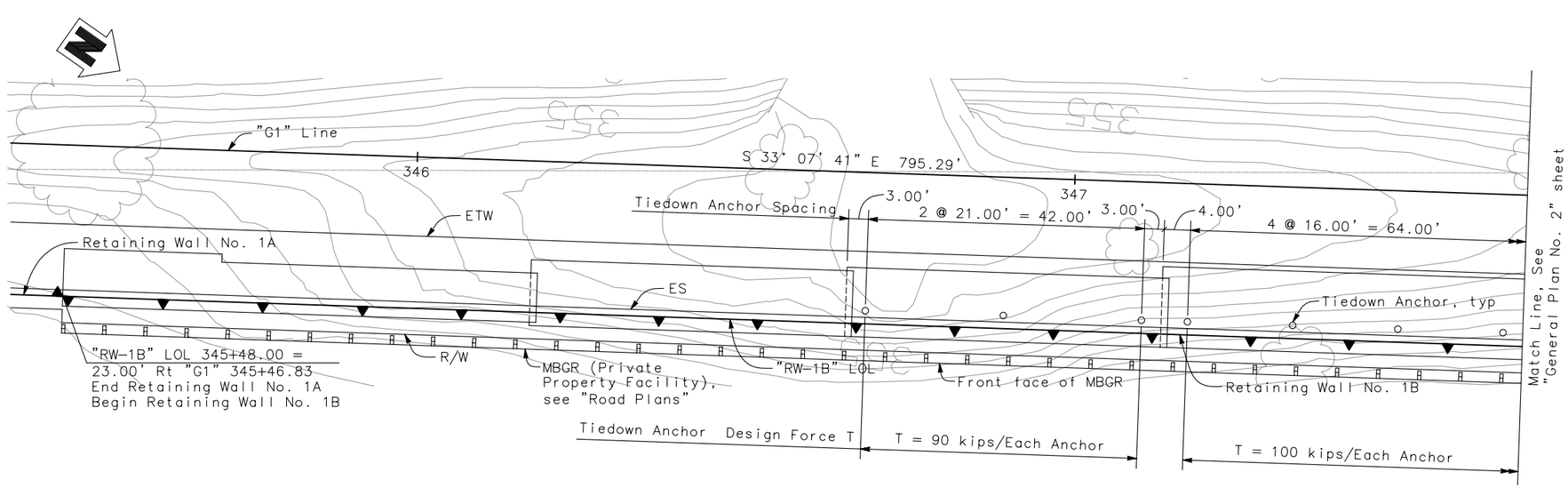


## PLAN

Scale: 1" = 10'

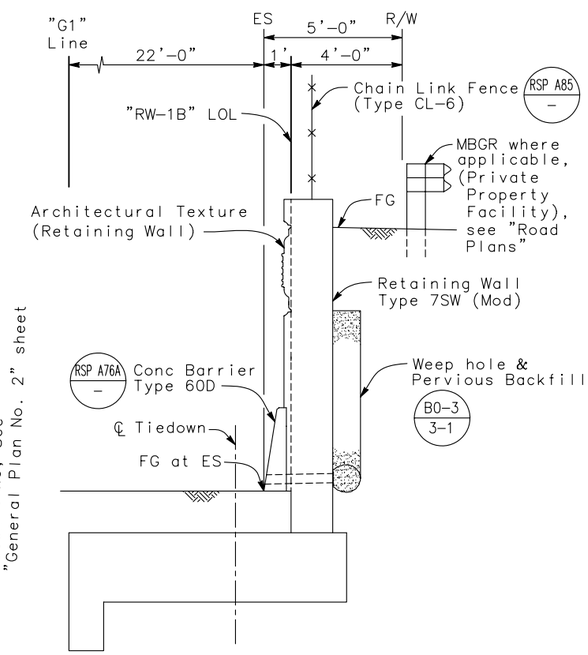


## TYPICAL SECTION

"RW-1B" 345+48.00 to 347+88.00
No Scale

Note:
The Contractor shall verify all controlling field dimensions before ordering or fabricating any material

| | | | | | | | |
|---|---|---|---|---|---|---|---|
| DESIGN OVERSIGHT | DESIGN | BY A. WANG | CHECKED P. SHINN | LOAD & RESISTANCE FACTOR DESIGN | LIVE LOADING: 240 psf SURCHARGE | | |
| | DETAILS | BY W. Y. TAN | CHECKED P. SHINN | LAYOUT | BY A. WANG | CHECKED K. HARIRSAZ | |
| SIGN OFF DATE | QUANTITIES | BY W. Y. TAN | CHECKED B. NEDUNGADI | SPECIFICATIONS | BY K. HARIRSAZ | PLANS AND SPECS COMPARED K. HARIRSAZ | |

PREPARED FOR THE STATE OF CALIFORNIA DEPARTMENT OF TRANSPORTATION

K. HARIRSAZ
PROJECT ENGINEER

| BRIDGE NO. | RETAINING WALL No. 1B |
|---|---|
| 49E0016 | |
| POST MILES | GENERAL PLAN No. 1 |
| 6.45 | |

DESIGN GENERAL PLAN SHEET (ENGLISH) (REV. 06-01-09)

ORIGINAL SCALE IN INCHES FOR REDUCED PLANS 0 1 2 3

CU 05
EA 474501

FILE => $REQUEST

DISREGARD PRINTS BEARING EARLIER REVISION DATES

REVISION DATES (PRELIMINARY STAGE ONLY) 3/12/10 3/24/10 4/30/10 — SHEET 1 OF 10

USERNAME => $USER DATE PLOTTED => $DATE TIME PLOTTED => $TIME

| DIST | COUNTY | ROUTE | POST MILES TOTAL PROJECT | SHEET No | TOTAL SHEETS |
|---|---|---|---|---|---|
| 05 | SLO | 101 | 5.9/6.9 | 241 | 290 |

REGISTERED CIVIL ENGINEER — DATE 4/30/10

PLANS APPROVAL DATE

*The State of California or its officers or agents shall not be responsible for the accuracy or completeness of scanned copies of this plan sheet.*

REGISTERED PROFESSIONAL ENGINEER ALLEN WANG No. C 66503 Exp. 06/30/12 CIVIL STATE OF CALIFORNIA

COUNTY OF SAN LUIS OBISPO
PUBLIC WORKS AND TRANSPORTATION DEPARTMENT
1050 MONTEREY STREET
SAN LUIS OBISPO, CA 93408

RAJAPPAN & MEYER
CONSULTING ENGINEERS, INC.
1038 LEIGH AVE, SUITE 100
SAN JOSE, CA 95126

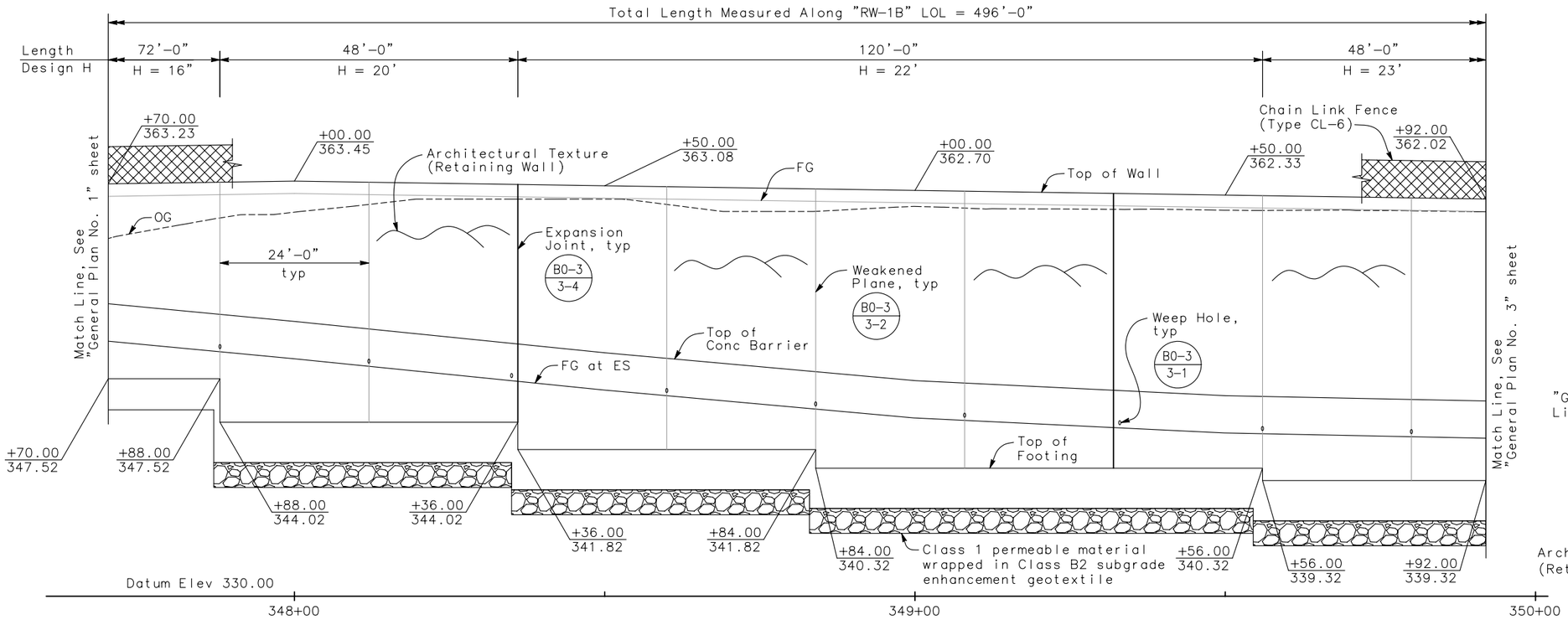


## MIRRORED ELEVATION

Scale: Horiz 1" = 10'
Verti 1" = 5'

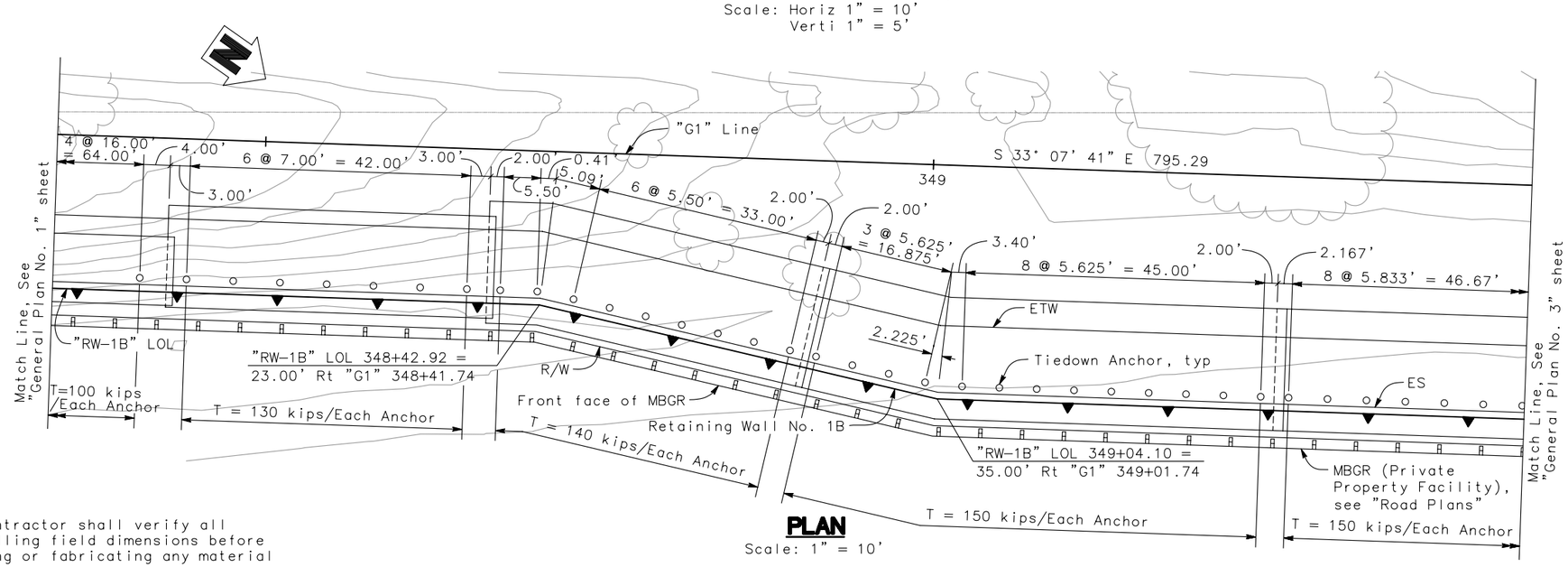


## PLAN

Scale: 1" = 10'

Note:
The Contractor shall verify all controlling field dimensions before ordering or fabricating any material

Note:
Tiedown anchor spacing measured along "RW-1B" line.

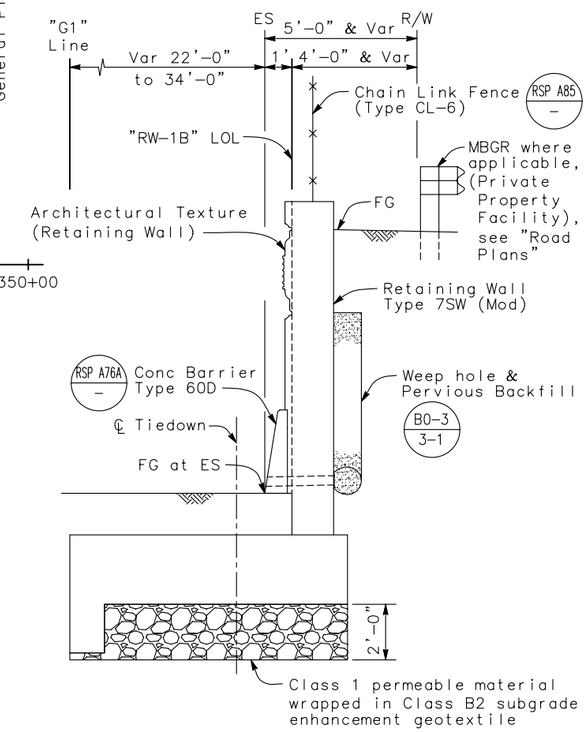


## TYPICAL SECTION

"RW-1B" 347+88.00 to 350+44.00
No Scale

| | | | | | | | |
|---|---|---|---|---|---|---|---|
| DESIGN OVERSIGHT | DESIGN | BY A. WANG | CHECKED P. SHINN | LOAD & RESISTANCE FACTOR DESIGN | LIVE LOADING: 240 psf SURCHARGE | | |
| | DETAILS | BY W. Y. TAN | CHECKED P. SHINN | LAYOUT BY A. WANG | CHECKED K. HARIRSAZ | | |
| SIGN OFF DATE | QUANTITIES | BY W. Y. TAN | CHECKED B. NEDUNGADI | SPECIFICATIONS BY K. HARIRSAZ | PLANS AND SPECS COMPARED K. HARIRSAZ | | |

DESIGN GENERAL PLAN SHEET (ENGLISH) (REV. 06-01-09)

ORIGINAL SCALE IN INCHES FOR REDUCED PLANS 0 1 2 3

PREPARED FOR THE STATE OF CALIFORNIA DEPARTMENT OF TRANSPORTATION

K. HARIRSAZ
PROJECT ENGINEER

CU 05
EA 474501

FILE => $REQUEST

BRIDGE NO. 49E0016
POST MILES 6.45

# RETAINING WALL No. 1B
# GENERAL PLAN No. 2

DISREGARD PRINTS BEARING EARLIER REVISION DATES

REVISION DATES (PRELIMINARY STAGE ONLY) 3/12/10 3/24/10 4/30/10

SHEET 2 OF 10

USERNAME => $USER DATE PLOTTED => $DATE TIME PLOTTED => $TIME

| DIST | COUNTY | ROUTE | POST MILES TOTAL PROJECT | SHEET No | TOTAL SHEETS |
|---|---|---|---|---|---|
| 05 | SLO | 101 | 5.9/6.9 | 242 | 290 |

REGISTERED CIVIL ENGINEER 4/30/10 DATE

PLANS APPROVAL DATE

*The State of California or its officers or agents shall not be responsible for the accuracy or completeness of scanned copies of this plan sheet.*

REGISTERED PROFESSIONAL ENGINEER ALLEN WANG No. C 66503 Exp. 06/30/12 Civil STATE OF CALIFORNIA

COUNTY OF SAN LUIS OBISPO
PUBLIC WORKS AND TRANSPORTATION DEPARTMENT
1050 MONTEREY STREET
SAN LUIS OBISPO, CA 93408

RAJAPPAN & MEYER
CONSULTING ENGINEERS, INC.
1038 LEIGH AVE, SUITE 100
SAN JOSE, CA 95126

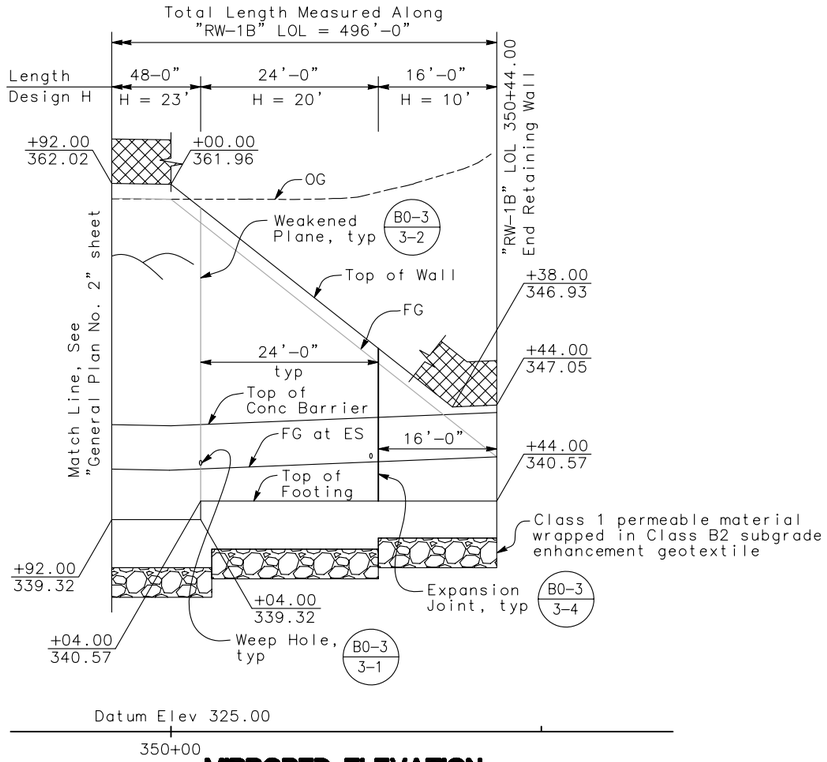


## MIRRORED ELEVATION

Scale: Horiz 1" = 10'
Verti 1" = 5'

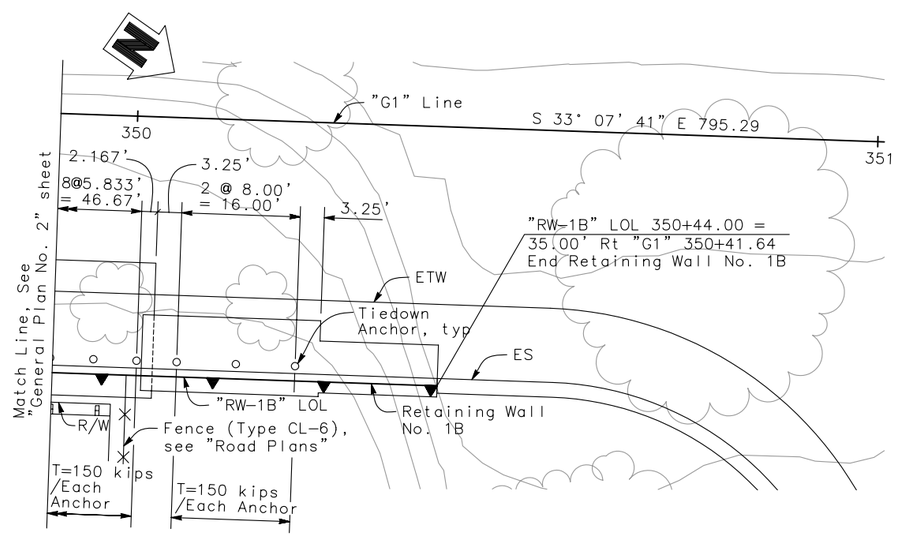


## PLAN

Scale: 1" = 10'

Note:
The Contractor shall verify all controlling field dimensions before ordering or fabricating any material

Note:
Tiedown anchor spacing measured along "RW-1B" line.

## INDEX TO PLANS


| SHEET NO. | TITLE |
|---|---|
| 1 | General Plan No. 1 |
| 2 | General Plan No. 2 |
| 3 | General Plan No. 3 |
| 4 | Retaining Wall Type 7SW (Mod) Detail No. 1 |
| 5 | Retaining Wall Type 7SW (Mod) Detail No. 2 |
| 6 | Tiedown Anchor Detail No. 1 |
| 7 | Tiedown Anchor Detail No. 2 |
| 8 | Log of Test Borings 1 of 3 |
| 9 | Log of Test Borings 2 of 3 |
| 10 | Log of Test Borings 3 of 3 |


## STANDARD PLANS DATED MAY, 2006

| | |
|---|---|
| A10A | Acronyms and Abbreviations (A – L) |
| A10B | Acronyms and Abbreviations (M – Z) |
| A10C | Symbols (Sheet 1 of 2) |
| A10D | Symbols (Sheet 2 of 2) |
| A62B | Limits of Payment for Excavation and Backfill – Bridge Surcharge and Wall |
| RSP A76A | Concrete Barrier Type 60D |
| RSP A85 | Chain Link Fence |
| B0-3 | Bridge Details |
| B3-8 | Retaining Wall Details No. 1 |

Standard Plan sheets No.
Detail No.

## QUANTITIES

| | | |
|---|---|---|
| Structure Excavation (Type D) | 935 | CY |
| Structure Excavation (Retaining Wall) | 4,539 | CY |
| Structure Backfill (Retaining Wall) | 1,546 | CY |
| Permeable Material with Subgrade Enhancement Geotextile | 287 | CY |
| Tiedown Anchor | 49 | EA |
| Structural Concrete, Retaining Wall | 1,300 | CY |
| Architectural Texture (Retaining Wall) | 648 | SF |
| Anti-Graffiti Coating | 6,202 | SF |
| Bar Reinforcing Steel | 136,054 | LB |
| Chain Link Fence (Type CL-6) | 499 | LF |
| Concrete Barrier (Type 60D) | 498 | LF |

| | | | | | | | |
|---|---|---|---|---|---|---|---|
| DESIGN OVERSIGHT | DESIGN | BY A. WANG | CHECKED P. SHINN | LOAD & RESISTANCE FACTOR DESIGN | LIVE LOADING: 240 psf SURCHARGE | | |
| | DETAILS | BY W. Y. TAN | CHECKED P. SHINN | LAYOUT | BY A. WANG | CHECKED K. HARIRSAZ | |
| SIGN OFF DATE | QUANTITIES | BY W. Y. TAN | CHECKED B. NEDUNGADI | SPECIFICATIONS | BY K. HARIRSAZ | PLANS AND SPECS COMPARED K. HARIRSAZ | |

DESIGN GENERAL PLAN SHEET (ENGLISH) (REV. 06-01-09)

ORIGINAL SCALE IN INCHES FOR REDUCED PLANS 0 1 2 3

PREPARED FOR THE STATE OF CALIFORNIA DEPARTMENT OF TRANSPORTATION

K. HARIRSAZ
PROJECT ENGINEER

CU 05
EA 474501

FILE => $REQUEST

BRIDGE NO. 49E0016
POST MILES 6.45

# RETAINING WALL No. 1B

# GENERAL PLAN No. 3

DISREGARD PRINTS BEARING EARLIER REVISION DATES

REVISION DATES (PRELIMINARY STAGE ONLY) 3/12/10 3/24/10 4/30/10

SHEET 3 OF 10

USERNAME => $USER DATE PLOTTED => $DATE TIME PLOTTED => $TIME

| DIST | COUNTY | ROUTE | POST MILES TOTAL PROJECT | SHEET No. | TOTAL SHEETS |
|---|---|---|---|---|---|
| 05 | SLO | 101 | 5.9/6.9 | 243 | 290 |

REGISTERED CIVIL ENGINEER 4/30/10

PLANS APPROVAL DATE

REGISTERED PROFESSIONAL ENGINEER ALLEN WANG No. C 66503 Exp. 06/30/12 CIVIL STATE OF CALIFORNIA

*The State of California or its officers or agents shall not be responsible for the accuracy or completeness of electronic copies of this plan sheet.*

COUNTY OF SAN LUIS OBISPO
PUBLIC WORKS AND TRANSPORTATION DEPARTMENT
1050 MONTEREY STREET
SAN LUIS OBISPO, CA 93408

RAJAPPAN & MEYER
CONSULTING ENGINEERS, INC.
1038 LEIGH AVE, SUITE 100
SAN JOSE, CA 95126

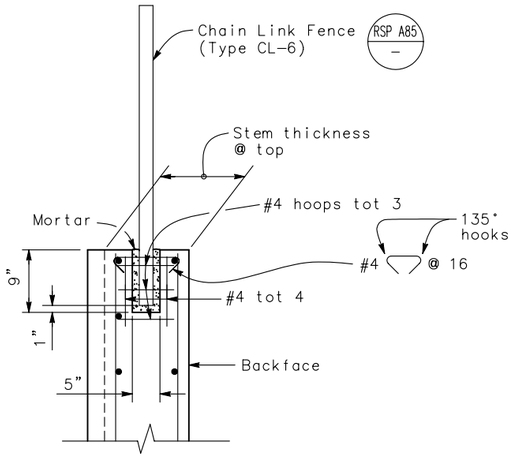


## DETAIL A ◇2

No Scale

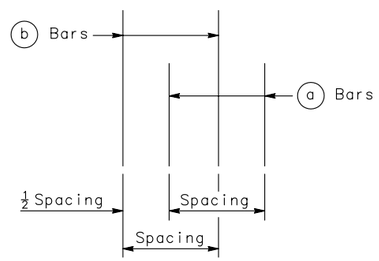


## REBAR SPACING

No Scale

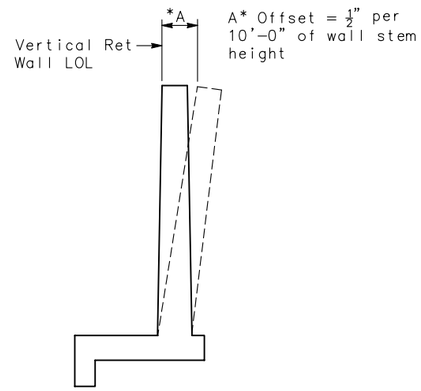


## WALL OFFSET ◇2

No Scale

Values for offsetting forms to be determined by engineer

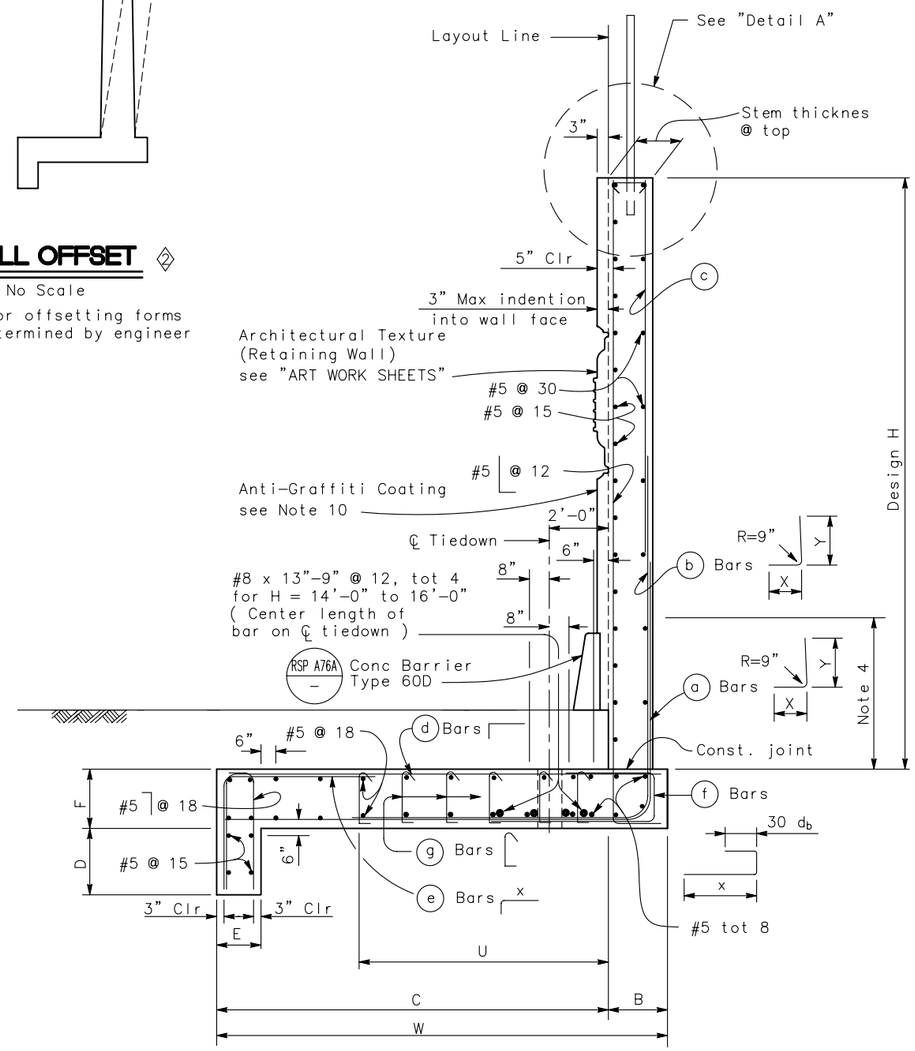


## SPREAD FOOTING SECTION ◇2

No Scale

### GENERAL NOTES ◇3

1. For retaining wall architectural finish or texture, see details elsewhere in project plans.
2. For details not shown and drainage notes, see B3-8
3. Footing coverage, 2'-0" minimum.
4. Limit of no splicing rebars = H/3.
5. Increasing stem thickness not permitted.
6. Place footing key concrete against undisturbed material.
7. Shift (a) bars, (b) bars, and (c) bars as required to clear formed hole for tiedown.
8. No reinforcements in footing key for H= 8' to H=12'.
9. Maximum distance from ℄ tiedown to edge of footing = 0.4(S).
10. Apply Anti-Graffiti Coating to the exposed front surface of wall stem and Conc Barrier Type 60D
11. Structure excavation under the design groundwater level at Elev 341 ft is paid for as Structure Excavation (Type D)

Note:
The Contractor shall verify all controlling field dimensions before ordering or fabricating any material

### DESIGN DATA ◇4

**DESIGN:** Load Factor Design (LFD)

**CONCRETE:** Reinforced Concrete, f'c = 3600 psi
fy = 60,000 psi

**LOADING CASE:**

Level ground with 240 psf live load surcharge
Seismic Load = 0.3 Dead Load
Dead Load of Fence = 10 lb/ft

**SEISMIC LOAD: SOIL**

Kh = 0.3g
Kv = 0.0
Kae : Mononobe-Okabe Method

**SOIL:** Design Groundwater at Elev 341 ft
$\phi = 34°$ $\gamma = 120$ pcf $\gamma' = 58$ pcf
Equivalent fluid pressure:
STATIC ACTIVE = 36 pcf for determination of toe pressure
STATIC PASSIVE = 350 pcf (above Elev 341 ft)
= 200 pcf (below Elev 341 ft)
SEISMIC = Coulomb's Theory

**LOAD COMBINATIONS:**

**EXTERNAL STABILITY:**

Group 1 : D + E + SC + 0.75T (F.S. Sliding > 1.5)
Group 3 : D + PYM + $P_{av}$ + V + 1.0 T (F.S. Sliding > 1.0)

**INTERNAL STABILITY: (LFD)**

Group A : $\beta$D + 1.7 E + 1.7 SC + 0.75 T
Group C :(Stem) 1.0 D + 1.0 E + 1.0 EQD + 1.0 EQE
Group C :(Footing) D + PYM + $P_{av}$ + V + 1.0 T

Where : $\beta$ = 1.0 or 1.3 whichever controls design
D = Dead Load
E = Lateral Earth Pressure
$P_{av}$ = Vertical Earth Pressure
SC = Live Load Surcharge
EQD = Seismic Dead Load
EQE = Seismic Lateral Earth Pressure
PYM = Probable Yield Moment (1.3 x Nominal Yield Moment of Stem)
V = Possible Shear at Base of Stem associated with Probable Yield Moment
T = Design Force for Vertical Tiedown

◇1

STANDARD DRAWING

FILE NO. xs14-380-1e

APPROVED BY G. WANG (RESPONSIBLE TECHNICAL SPECIALIST) — APPROVAL DATE 5-13-08

RELEASED BY ROBERTO LACALLE (RESPONSIBLE OFFICE CHIEF) — RELEASE DATE 5-13-08

◇1 Modified Sheet Title
◇2 Modified Details
◇3 Revised Notes
◇4 Modified Design Data

STATE OF CALIFORNIA
DEPARTMENT OF TRANSPORTATION

DIVISION OF ENGINEERING SERVICES

BRIDGE NO. 49E0016
MILE POST 6.45

# RETAINING WALL No. 1B

## RETAINING WALL TYPE 7SW (MOD) DETAIL No. 1

DS OSD 2147A (ENGLISH STANDARD DRAWING "XS" BORDER REV. 01/11/08)

ORIGINAL SCALE IN INCHES FOR REDUCED PLANS 0 1 2 3

CU 05
EA 474501

DISREGARD PRINTS BEARING EARLIER REVISION DATES → 3/12/10 3/24/10 4/30/10

REVISION DATES (PRELIMINARY STAGE ONLY) | SHEET 4 | OF 10

USERNAME => $USER

$REQUEST

DATE PLOTTED => $DATE TIME PLOTTED => $TIME

| DIST | COUNTY | ROUTE | POST MILES TOTAL PROJECT | SHEET No. | TOTAL SHEETS |
|---|---|---|---|---|---|
| 05 | SLO | 101 | 5.9/6.9 | 244 | 290 |

Allen Wang 4/30/10
REGISTERED CIVIL ENGINEER

PLANS APPROVAL DATE

REGISTERED PROFESSIONAL ENGINEER ALLEN WANG No. C 66503 Exp. 06/30/12 CIVIL STATE OF CALIFORNIA

*The State of California or its officers or agents shall not be responsible for the accuracy or completeness of electronic copies of this plan sheet.*


COUNTY OF SAN LUIS OBISPO
PUBLIC WORKS AND TRANSPORTATION DEPARTMENT
1050 MONTEREY STREET
SAN LUIS OBISPO, CA 93408

RAJAPPAN & MEYER
CONSULTING ENGINEERS, INC.
1038 LEIGH AVE, SUITE 100
SAN JOSE, CA 95126


TABLE 1: TABLE OF DIMENSIONS AND DATA ◇2

| | | | | | | | | |
|---|---|---|---|---|---|---|---|---|
| Design H | 8'-0" | 10'-0" | 12'-0" | 14'-0" | 16'-0" | 20'-0" | 22'-0" | 23'-0" |
| W | 7'-6" | 8'-9" | 10'-0" | 10'-6" | 12'-3" | 15'-3" | 18'-3" | 18'-3" |
| C | 6'-0" | 7'-3" | 8'-0" | 8'-6" | 10'-3" | 13'-0" | 15'-3" | 15'-3" |
| B | 1'-6" | 1'-6" | 2'-0" | 2'-0" | 2'-0" | 2'-3" | 3'-0" | 3'-0" |
| F | 2'-6" | 2'-6" | 2'-6" | 2'-3" | 2'-6" | 3'-3" | 3'-3" | 3'-3" |
| D (Footing Key Depth) | 1'-6" | 1'-6" | 1'-9" | 1'-9" | 2'-0" | 2'-6" | 2'-9" | 2'-9" |
| E | 1'-3" | 1'-3" | 1'-3" | 1'-3" | 1'-6" | 1'-9" | 1'-9" | 1'-9" |
| Stem Thickness | 1'-0" | 1'-0" | 1'-3" | 1'-3" | 1'-6" | 1'-9" | 2'-0" | 2'-0" |
| ⓐ Bars | | | | | #6@8 | #9@12 | #8@8 | #8@7 |
| X | | | | | Cont | Cont | Cont | Cont |
| Y | | | | | 6'-0" | 8'-6" | 9'-0" | 9'-6" |
| ⓑ Bars | #6@12 | #7@12 | #7@10 | #8@10 | #6@8 | #9@12 | #8@8 | #8@7 |
| X | Cont | Cont | Cont | Cont | 5'-9" | 6'-9" | 7'-0" | 7'-9" |
| Y | Cont | Cont | Cont | Cont | Cont | 12'-6" | 13'-6" | 14'-0" |
| Placement, ◯ | | | | | Ⓐ | Ⓐ | Ⓐ | Ⓐ |
| ⓒ Bars | | | | | | #8@12 | #7@8 | #7@7 |
| Placement, ◯ | | | | | | Ⓒ | Ⓒ | Ⓒ |
| ⓓ Bars | #5@18 | #5@18 | #5@18 | #5@18 | #5@18 | #5@18 | #5@18 | #5@18 |
| ⓔ Bars | | | | | | #5@18 | #5@18 | #5@18 |
| X | | | | | | 6'-0" | 6'-0" | 6'-0" |
| Placement, ◯ | | | | | | Ⓓ | Ⓓ | Ⓓ |
| ⓕ Bars | | | | #6@12 | #6@8 | #6@10 | #6@8 | #7@6 |
| X | | | | 3'-9" | 3'-9" | 4'-3" | 4'-3" | 4'-6" |
| ⓖ Bars | | | | #4@15 | #4@15 | #4@15 | #4@12 | #5@15 |
| U | | | | 5'-0" | 6'-0" | 7'-6" | 8'-9" | 8'-9" |
| Tie Down Design Force (T) k/ft | 0 | 0 | 0 | 4 | 6 | 18 | 25 | 25 |
| Tie Down Maximum Spacing (S) ft | | | | 24 | 16 | 8 | 6 | 6 |
| Ultimate Bearing Capacity Required (ksf) | 5.70 | 4.29 | 5.72 | 4.47 | 5.59 | 4.73 | 4.34 | 5.04 |
| $H_D$ (N) Group 1 k/ft | 2.66 (6.23) | 3.59 (7.42) | 4.67 (9.34) | 5.72 (12.81) | 7.23 (16.57) | 10.98 (31.17) | 13.13 (41.28) | 14.28 (43.53) |

## LEGEND FOR BAR PLACEMENT: ◇3

Ⓐ : Alternate placement of ⓐ bars and ⓑ bars

Ⓒ : Splice ⓒ bars to ⓑ bars

Ⓓ : Bundle ⓓ bars and ⓔ bars

$H_D$ : Horizontal driving force

(N) : Sum of vertical forces

Cont : Continuous

Note:
The Contractor shall verify all controlling field dimensions before ordering or fabricating any material

◇1

STANDARD DRAWING

FILE NO. xs14-380-2e

APPROVED BY G WANG (RESPONSIBLE TECHNICAL SPECIALIST)
APPROVAL DATE 5-13-08

RELEASED BY ROBERTO LACALLE (RESPONSIBLE OFFICE CHIEF)
RELEASE DATE 5-13-08

◇1 Modified Sheet Title
◇2 Modified Table 1
◇3 Deleted Bar Placement Ⓑ

STATE OF CALIFORNIA
DEPARTMENT OF TRANSPORTATION

DIVISION OF ENGINEERING SERVICES

BRIDGE NO. 49E0016
MILE POST 6.45

# RETAINING WALL No. 1B
# RETAINING WALL TYPE 7SW (MOD) DETAIL No. 2

DS OSD 2147A (ENGLISH STANDARD DRAWING "XS" BORDER REV. 01/11/08)

ORIGINAL SCALE IN INCHES FOR REDUCED PLANS 0 1 2 3

CU 05
EA 474501

DISREGARD PRINTS BEARING EARLIER REVISION DATES 3/12/10 3/24/10 4/30/10

REVISION DATES (PRELIMINARY STAGE ONLY) | SHEET 5 | OF 10

USERNAME => $USER

$REQUEST

DATE PLOTTED => $DATE TIME PLOTTED => $TIME

| DIST | COUNTY | ROUTE | POST MILES TOTAL PROJECT | SHEET No. | TOTAL SHEETS |
|---|---|---|---|---|---|
| 05 | SLO | 101 | 5.9/6.9 | 245 | 290 |

Allen Wang 4/30/10
REGISTERED CIVIL ENGINEER

PLANS APPROVAL DATE

REGISTERED PROFESSIONAL ENGINEER ALLEN WANG No. C 66503 Exp. 06/30/12 CIVIL STATE OF CALIFORNIA

*The State of California or its officers or agents shall not be responsible for the accuracy or completeness of electronic copies of this plan sheet.*

COUNTY OF SAN LUIS OBISPO
PUBLIC WORKS AND TRANSPORTATION DEPARTMENT
1050 MONTEREY STREET
SAN LUIS OBISPO, CA 93408

RAJAPPAN & MEYER
CONSULTING ENGINEERS, INC.
1038 LEIGH AVE, SUITE 100
SAN JOSE, CA 95126

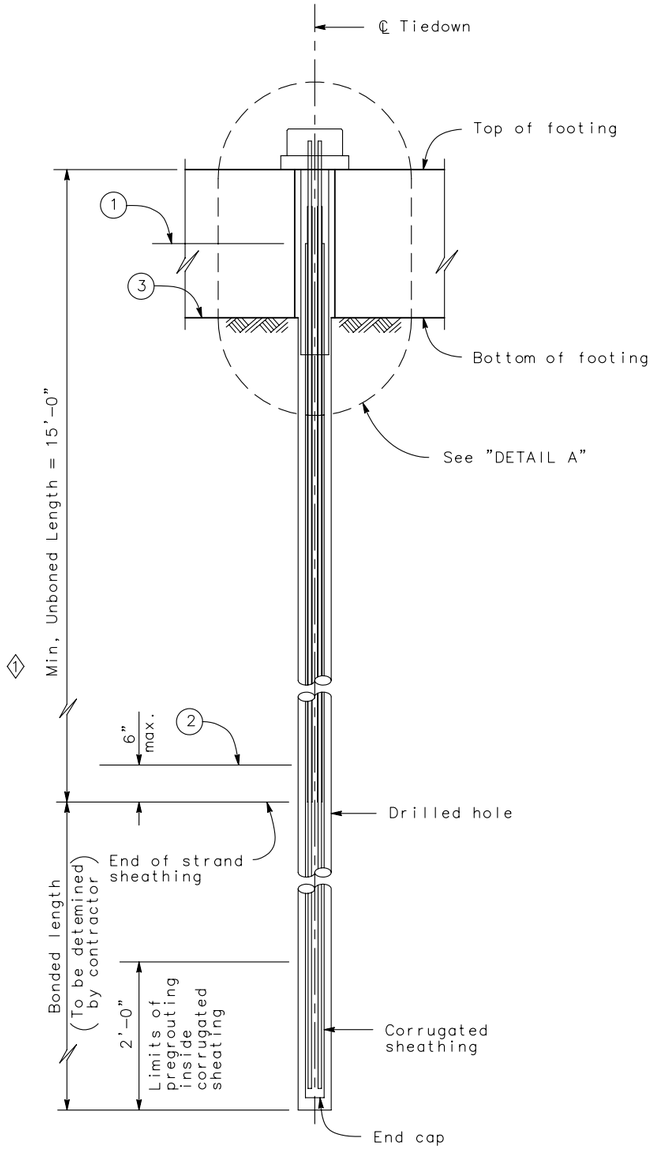


**TIEDOWN TENDON DETAILS (STRANDS)**
Scale 1"=1'

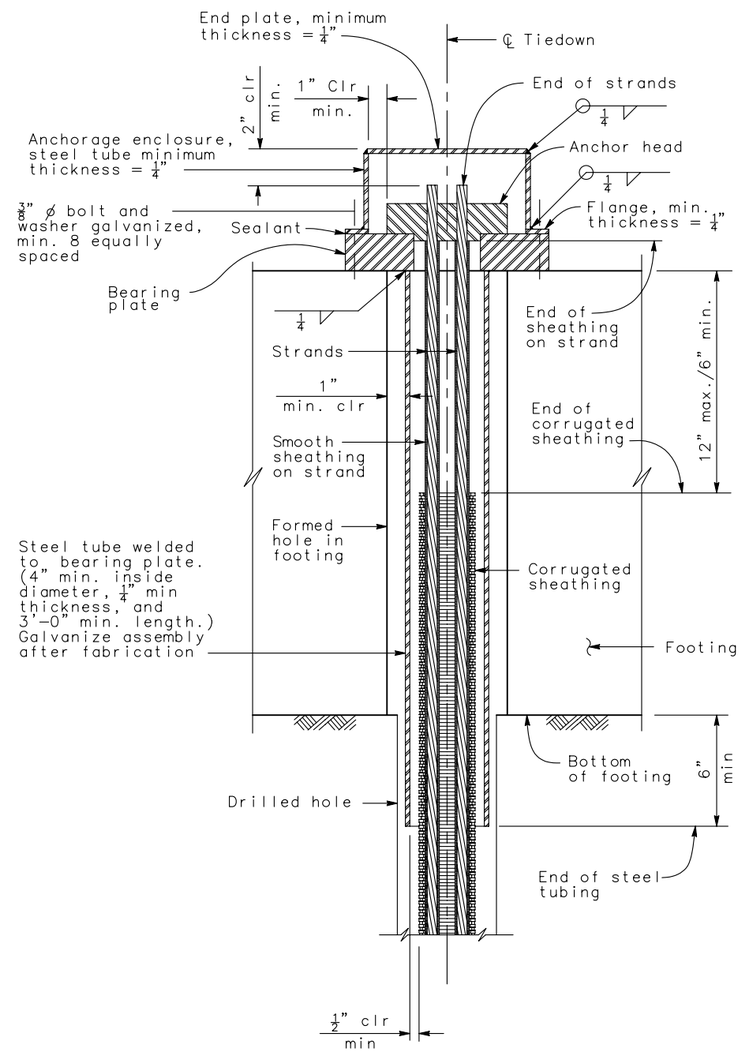


**DETAIL A**
Scale 3"= 1'

**GENERAL NOTES-TIEDOWN ANCHOR**

PRESTRESSING (TIEDOWNS):
BARS– ASTM Designation: A722 Type II
STRANDS–ASTM Designation: A416
T= DESIGN FORCE PER TIEDOWN (K)
fpu= MINIMUM TENSILE STRENGTH OF PRESTRESSING STEEL (PSI)

As= MINIMUM CROSS SECTIONAL AREA OF PRESTRESSING STEEL IN TIEDOWN TENDON (square inches)

$$As\ (min) = \frac{1.5T}{0.75\ fpu}$$

**NOTES:**

1. Anchorage enclosure shall have provisions to allow injecting grout at low end and venting at high end. Galvanize enclosure after fabrication.
2. Alternative anchor enclosure shown on sheet "TIEDOWN ANCHOR DETAILS No.2" sheet

(1) Level of initial grouting inside corrugated sheathing

(2) Level of initial grouting in drilled hole.

(3) Level of secondary grouting in drilled hole.

Note:
The Contractor shall verify all controlling field dimensions before ordering or fabricating any material

STANDARD DRAWING
FILE NO. xs12-030-1e
APPROVED BY G. WANG — RESPONSIBLE TECHNICAL SPECIALIST
APPROVAL DATE 5-13-08
RELEASED BY ROBERTO LACALLE — RESPONSIBLE OFFICE CHIEF
RELEASE DATE 5-13-08

(1) Modified Text

STATE OF CALIFORNIA
DEPARTMENT OF TRANSPORTATION

DIVISION OF ENGINEERING SERVICES

BRIDGE NO. 49E0016
MILE POST 6.45

**RETAINING WALL No. 1B**
**TIEDOWN ANCHOR DETAIL No. 1**

DS OSD 2147A (ENGLISH STANDARD DRAWING "XS" BORDER REV. 01/11/08)

ORIGINAL SCALE IN INCHES FOR REDUCED PLANS 0 1 2 3

CU 05
EA 474501

DISREGARD PRINTS BEARING EARLIER REVISION DATES

REVISION DATES (PRELIMINARY STAGE ONLY) 3/12 03/24 04/30/10

SHEET 6 OF 10

USERNAME => $USER

$REQUEST

TIME PLOTTED => $TIME

DATE PLOTTED => $DATE

| DIST | COUNTY | ROUTE | POST MILES TOTAL PROJECT | SHEET No. | TOTAL SHEETS |
|---|---|---|---|---|---|
| 05 | SLO | 101 | 5.9/6.9 | 246 | 290 |

Allen Wang 4/30/10
REGISTERED CIVIL ENGINEER

PLANS APPROVAL DATE

REGISTERED PROFESSIONAL ENGINEER ALLEN WANG No. C 66503 Exp. 06/30/12 CIVIL STATE OF CALIFORNIA

*The State of California or its officers or agents shall not be responsible for the accuracy or completeness of electronic copies of this plan sheet.*

COUNTY OF SAN LUIS OBISPO
PUBLIC WORKS AND TRANSPORTATION DEPARTMENT
1050 MONTEREY STREET
SAN LUIS OBISPO, CA 93408

RAJAPPAN & MEYER
CONSULTING ENGINEERS, INC.
1038 LEIGH AVE, SUITE 100
SAN JOSE, CA 95126

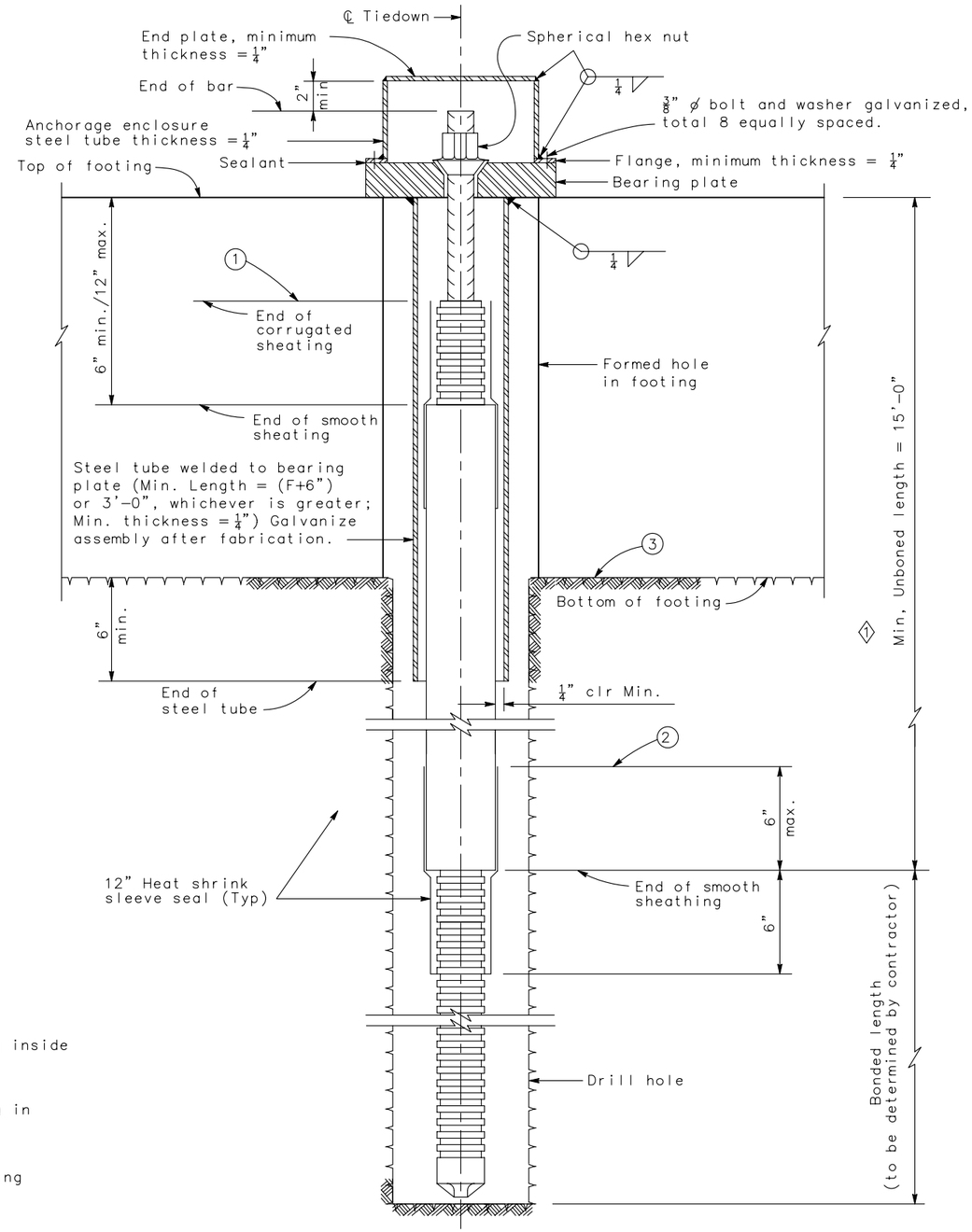


**TIEDOWN TENDON DETAILS (BAR)**

Scale 3"= 1'

NOTE:

Anchorage enclosure shall have provision to allow injecting grout at low end and venting at high end. Galvanize enclosure after fabrication.

1. Level of initial grouting inside corrugated sheathing.
2. Level of initial grouting in drilled hole.
3. Level of secondary grouting in drilled hole.

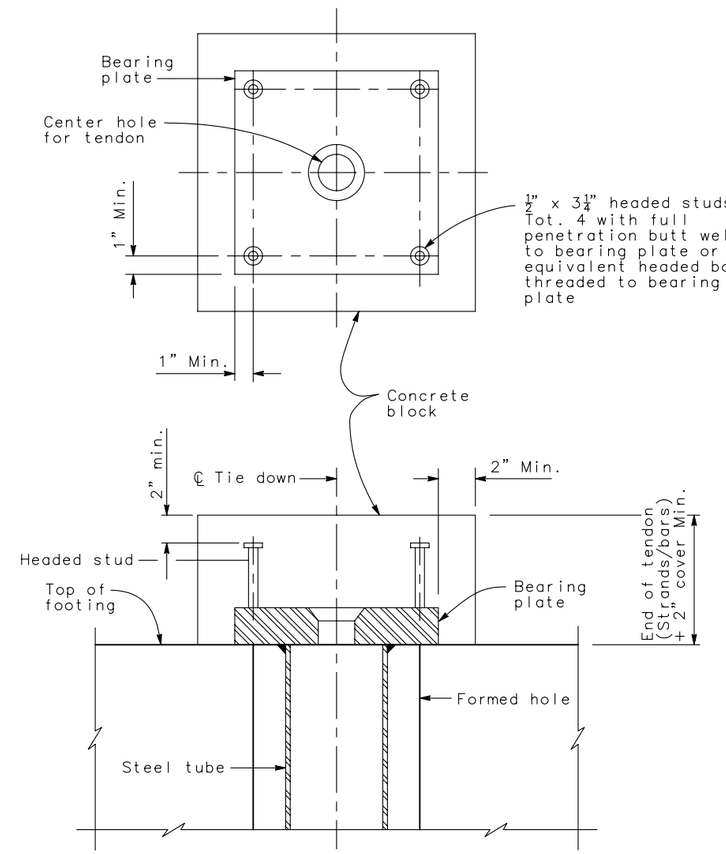


**ANCHOR ENCLOSURE (ALTERNATIVE)**

Scale 3"= 1'

Note:
The Contractor shall verify all controlling field dimensions before ordering or fabricating any material

STANDARD DRAWING

FILE NO. xs12-030-2e

APPROVED BY G. WANG (RESPONSIBLE TECHNICAL SPECIALIST) — APPROVAL DATE 5-13-08

RELEASED BY ROBERTO LACALLE (RESPONSIBLE OFFICE CHIEF) — RELEASE DATE 5-13-08

1 Modified Text

STATE OF CALIFORNIA DEPARTMENT OF TRANSPORTATION

DIVISION OF ENGINEERING SERVICES

BRIDGE NO. 49E0016

MILE POST 6.45

RETAINING WALL No. 1B

TIEDOWN ANCHOR DETAIL No. 2

DS OSD 2147A (ENGLISH STANDARD DRAWING "XS" BORDER REV. 01/11/08)

ORIGINAL SCALE IN INCHES FOR REDUCED PLANS 0 1 2 3

CU 05
EA 474501

DISREGARD PRINTS BEARING EARLIER REVISION DATES

REVISION DATES (PRELIMINARY STAGE ONLY) 3/12/10 3/24/10 4/30/10

SHEET 7 OF 10

USERNAME => $USER

$REQUEST

TIME PLOTTED => $TIME

DATE PLOTTED => $DATE

| DIST | COUNTY | ROUTE | POST MILES TOTAL PROJECT | SHEET No | TOTAL SHEETS |
|---|---|---|---|---|---|
| 05 | SLO | 101 | 5.9/6.9 | 247 | 290 |

REGISTERED GEOTECHNICAL ENGINEER — DATE 4/30/10

PLANS APPROVAL DATE

REGISTERED PROFESSIONAL ENGINEER — GARY PARIKH — No. G.E. 666 — Exp. 12/31/11 — GEOTECHNICAL — STATE OF CALIFORNIA

The State of California or its officers or agents shall not be responsible for the accuracy or completeness of electronic copies of this plan sheet.

PARIKH CONSULTANTS, INC.
2360 QUME DRIVE, SUITE A
SAN JOSE, CA 95131

REFERENCE: CALTRANS SOIL & ROCK LOGGING, CLASSIFICATION, AND PRESENTATION MANUAL (JUNE 2007)

## GROUP SYMBOLS AND NAMES

| Graphic/Symbol | Group Names | Graphic/Symbol | Group Names |
|---|---|---|---|
| GW | Well-graded GRAVEL<br>Well-graded GRAVEL with SAND | CL | Lean CLAY<br>Lean CLAY with SAND<br>Lean CLAY with GRAVEL<br>SANDY lean CLAY<br>SANDY lean CLAY with GRAVEL<br>GRAVELLY lean CLAY<br>GRAVELLY lean CLAY with SAND |
| GP | Poorly graded GRAVEL<br>Poorly graded GRAVEL with SAND | | |
| GW-GM | Well-graded GRAVEL with SILT<br>Well-graded GRAVEL with SILT and SAND | CL-ML | SILTY CLAY<br>SILTY CLAY with SAND<br>SILTY CLAY with GRAVEL<br>SANDY SILTY CLAY<br>SANDY SILTY CLAY with GRAVEL<br>GRAVELLY SILTY CLAY<br>GRAVELLY SILTY CLAY with SAND |
| GW-GC | Well-graded GRAVEL with CLAY (or SILTY CLAY)<br>Well-graded GRAVEL with CLAY and SAND (or SILTY CLAY and SAND) | | |
| GP-GM | Poorly graded GRAVEL with SILT<br>Poorly graded GRAVEL with SILT and SAND | ML | SILT<br>SILT with SAND<br>SILT with GRAVEL<br>SANDY SILT<br>SANDY SILT with GRAVEL<br>GRAVELLY SILT<br>GRAVELLY SILT with SAND |
| GP-GC | Poorly graded GRAVEL with CLAY (or SILTY CLAY)<br>Poorly graded GRAVEL with CLAY and SAND (or SILTY CLAY and SAND) | | |
| GM | SILTY GRAVEL<br>SILTY GRAVEL with SAND | OL | ORGANIC lean CLAY<br>ORGANIC lean CLAY with SAND<br>ORGANIC lean CLAY with GRAVEL<br>SANDY ORGANIC lean CLAY<br>SANDY ORGANIC lean CLAY with GRAVEL<br>GRAVELLY ORGANIC lean CLAY<br>GRAVELLY ORGANIC lean CLAY with SAND |
| GC | CLAYEY GRAVEL<br>CLAYEY GRAVEL with SAND | | |
| GC-GM | SILTY, CLAYEY GRAVEL<br>SILTY, CLAYEY GRAVEL with SAND | OL | ORGANIC SILT<br>ORGANIC SILT with SAND<br>ORGANIC SILT with GRAVEL<br>SANDY ORGANIC SILT<br>SANDY ORGANIC SILT with GRAVEL<br>GRAVELLY ORGANIC SILT<br>GRAVELLY ORGANIC SILT with SAND |
| SW | Well-graded SAND<br>Well-graded SAND with GRAVEL | | |
| SP | Poorly graded SAND<br>Poorly graded SAND with GRAVEL | CH | Fat CLAY<br>Fat CLAY with SAND<br>Fat CLAY with GRAVEL<br>SANDY fat CLAY<br>SANDY fat CLAY with GRAVEL<br>GRAVELLY fat CLAY<br>GRAVELLY fat CLAY with SAND |
| SW-SM | Well-graded SAND with SILT<br>Well-graded SAND with SILT and GRAVEL | | |
| SW-SC | Well-graded SAND with CLAY (or SILTY CLAY)<br>Well-graded SAND with CLAY and GRAVEL (or SILTY CLAY and GRAVEL) | MH | Elastic SILT<br>Elastic SILT with SAND<br>Elastic SILT with GRAVEL<br>SANDY elastic SILT<br>SANDY elastic SILT with GRAVEL<br>GRAVELLY elastic SILT<br>GRAVELLY elastic SILT with SAND |
| SP-SM | Poorly graded SAND with SILT<br>Poorly graded SAND with SILT and GRAVEL | | |
| SP-SC | Poorly graded SAND with CLAY (or SILTY CLAY)<br>Poorly graded SAND with CLAY and GRAVEL (or SILTY CLAY and GRAVEL) | OH | ORGANIC fat CLAY<br>ORGANIC fat CLAY with SAND<br>ORGANIC fat CLAY with GRAVEL<br>SANDY ORGANIC fat CLAY<br>SANDY ORGANIC fat CLAY with GRAVEL<br>GRAVELLY ORGANIC fat CLAY<br>GRAVELLY ORGANIC fat CLAY with SAND |
| SM | SILTY SAND<br>SILTY SAND with GRAVEL | | |
| SC | CLAYEY SAND<br>CLAYEY SAND with GRAVEL | OH | ORGANIC elastic SILT<br>ORGANIC elastic SILT with SAND<br>ORGANIC elastic SILT with GRAVEL<br>SANDY ORGANIC elastic SILT<br>SANDY ORGANIC elastic SILT with GRAVEL<br>GRAVELLY ORGANIC elastic SILT<br>GRAVELLY ORGANIC elastic SILT with SAND |
| SC-SM | SILTY, CLAYEY SAND<br>SILTY, CLAYEY SAND with GRAVEL | | |
| PT | PEAT | OL/OH | ORGANIC SOIL<br>ORGANIC SOIL with SAND<br>ORGANIC SOIL with GRAVEL<br>SANDY ORGANIC SOIL<br>SANDY ORGANIC SOIL with GRAVEL<br>GRAVELLY ORGANIC SOIL<br>GRAVELLY ORGANIC SOIL with SAND |
| | COBBLES<br>COBBLES and BOULDERS<br>BOULDERS | | |

## FIELD AND LABORATORY TESTING

- (C) Consolidation (ASTM D 2435)
- (CL) Collapse Potential (ASTM D 5333)
- (CP) Compaction Curve (CTM 216)
- (CR) Corrosivity Testing (CTM 643, CTM 422, CTM 417)
- (CU) Consolidated Undrained Triaxial (ASTM D 4767)
- (DS) Direct Shear (ASTM D 3080)
- (EI) Expansion Index (ASTM D 4829)
- (M) Moisture Content (ASTM D 2216)
- (OC) Organic Content-% (ASTM D 2974)
- (P) Permeability (CTM 220)
- (PA) Particle Size Analysis (ASTM D 422)
- (PI) Plasticity Index (AASHTO T 90) Liquid Limit (AASHTO T 89)
- (PL) Point Load Index (ASTM D 5731)
- (PM) Pressure Meter
- (PP) Pocket Penetrometer
- (R) R-Value (CTM 301)
- (SE) Sand Equivalent (CTM 217)
- (SG) Specific Gravity (AASHTO T 100)
- (SL) Shrinkage Limit (ASTM D 427)
- (SW) Swell Potential (ASTM D 4546)
- (TV) Pocket Torvane
- (UC) Unconfined Compression-Soil (ASTM D 2166) Unconfined Compression-Rock (ASTM D 2938)
- (UU) Unconsolidated Undrained Triaxial (ASTM D 2850)
- (UW) Unit Weight (ASTM D 4767)
- (VS) Vane Shear (AASHTO T 223)

## APPARENT DENSITY OF COHESIONLESS SOILS

| Description | SPT $N_{60}$ (Blows / 12 inches) |
|---|---|
| Very loose | 0 - 4 |
| Loose | 5 - 10 |
| Medium Dense | 11 - 30 |
| Dense | 31 - 50 |
| Very Dense | > 50 |

## MOISTURE

| Description | Criteria |
|---|---|
| Dry | Absence of moisture, dusty, dry to the touch |
| Moist | Damp but no visible water |
| Wet | Visible free water, usually soil is below water table |

## PERCENT OR PROPORTION OF SOILS

| Description | Criteria |
|---|---|
| Trace | Particles are present but estimated to be less than 5% |
| Few | 5 to 10% |
| Little | 15 to 25% |
| Some | 30 to 45% |
| Mostly | 50 to 100% |

## PARTICLE SIZE

| Description | | Size |
|---|---|---|
| Boulder | | > 12" |
| Cobble | | 3" to 12" |
| Gravel | Coarse | 3/4" to 3" |
| | Fine | No. 4 to 3/4" |
| Sand | Coarse | No. 10 to No. 4 |
| | Medium | No. 40 to No. 10 |
| | Fine | No. 200 to No. 40 |

## CEMENTATION

| Description | Criteria |
|---|---|
| Weak | Crumbles or breaks with handling or little finger pressure. |
| Moderate | Crumbles or breaks with considerable finger pressure. |
| Strong | Will not crumble or break with finger pressure. |

## CONSISTENCY OF COHESIVE SOILS

| Description | Unconfined Compressive Strength (tsf) | Pocket Penetrometer Measurement (tsf) | Torvane Measurement (tsf) | Field Approximation |
|---|---|---|---|---|
| Very Soft | < 0.25 | < 0.25 | < 0.12 | Easily penetrated several inches by fist |
| Soft | 0.25 to 0.50 | 0.25 to 0.50 | 0.12 to 0.25 | Easily penetrated several inches by thumb |
| Medium Stiff | 0.50 to 1.0 | 0.50 to 1.0 | 0.25 to 0.50 | Penetrated several inches by thumb with moderate effort |
| Stiff | 1 to 2 | 1 to 2 | 0.50 to 1.0 | Readily indented by thumb but penetrated only with great effort |
| Very Stiff | 2 to 4 | 2 to 4 | 1.0 to 2.0 | Readily indented by thumbnail |
| Hard | > 4.0 | > 4.0 | > 2.0 | Indented by thumbnail with difficulty |

## PLASTICITY OF FINE-GRAINED SOILS

| Description | Criteria |
|---|---|
| Nonplastic | A 1/8-inch thread cannot be rolled at any water content. |
| Low | The thread can barely be rolled and the lump cannot be formed when drier than the plastic limit. |
| Medium | The thread is easy to roll and not much time is required to reach the plastic limit. The thread cannot be rerolled after reaching the plastic limit. The lump crumbles when drier than the plastic limit. |
| High | It takes considerable time rolling and kneading to reach the plastic limit. The thread can be rerolled several times after reaching the plastic limit. The lump can be formed without crumbling when drier than the plastic limit. |

## BOREHOLE IDENTIFICATION

| Symbol | Hole Type | Description |
|---|---|---|
| Size | A | Auger Boring |
| Size | R<br>P | Rotary drilled boring<br>Rotary percussion boring (air) |
| Size | R | Rotary drilled diamond core |
| Size | HD<br>HA | Hand driven (1-inch soil tube)<br>Hand Auger |
| ● | D | Dynamic Cone Penetration Boring |
| ▲ | CPT | Cone Penetration Test (ASTM D 5778-95) |
| □ | O | Other |

Hole I.D. — Note: Size in inches.

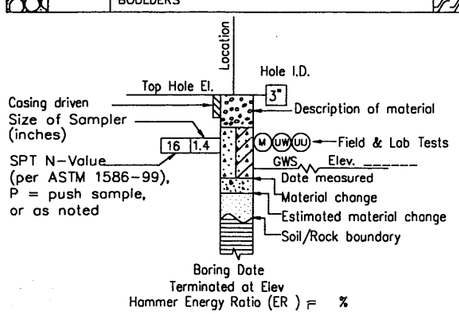


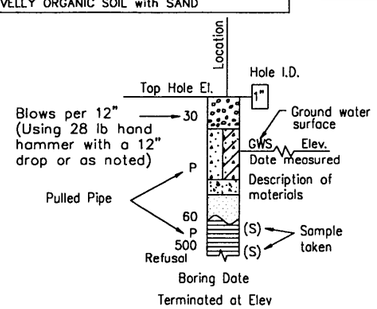


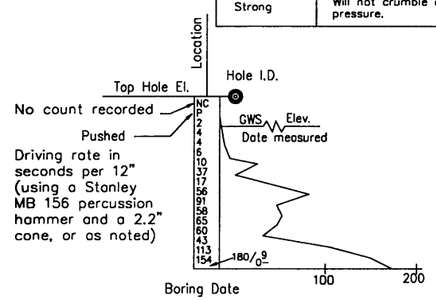


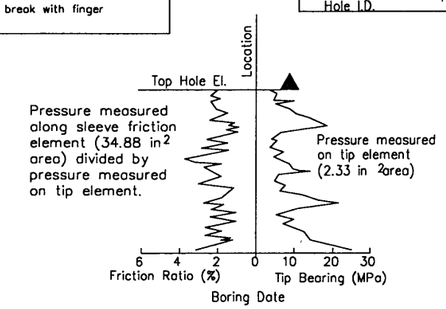


| | | | | | |
|---|---|---|---|---|---|
| DESIGN OVERSIGHT | DRAWN BY | L. TRAN | L. BHANGOO<br>FIELD INVESTIGATION BY: | PREPARED FOR THE STATE OF CALIFORNIA DEPARTMENT OF TRANSPORTATION | D. WANG<br>PROJECT ENGINEER |
| SIGN OFF DATE | CHECKED BY | D. WANG | DATE: JANUARY AND NOVEMBER 2007 | | |

BRIDGE NO. 49E0016 — POST MILES 6.45

# SOIL LEGEND

# LOG OF TEST BORINGS 1 OF 3

OGS GEOTECHNICAL LOG OF TEST BORINGS SHEET (ENGLISH) (REV. 06-01-09)

ORIGINAL SCALE IN INCHES FOR REDUCED PLANS 0 1 2 3

CU 05
EA 474501

DISREGARD PRINTS BEARING EARLIER REVISION DATES — REVISION DATES 11/07/08 04/28/09 07/08/09 01/15/10

SHEET 8 OF 10

| DIST | COUNTY | ROUTE | POST MILES TOTAL PROJECT | SHEET No | TOTAL SHEETS |
|---|---|---|---|---|---|
| 05 | SLO | 101 | 5.9/6.9 | 248 | 290 |

GEOTECHNICAL PROFESSIONAL — DATE 4/30/10

PLANS APPROVAL DATE

REGISTERED PROFESSIONAL ENGINEER — GARY PARIKH — No. G.E. 666 — Exp. 12/31/11 — GEOTECHNICAL — STATE OF CALIFORNIA

The State of California or its officers or agents shall not be responsible for the accuracy or completeness of scanned copies of this plan sheet.

PARIKH CONSULTANTS, INC.
2360 QUME DRIVE, SUITE A
SAN JOSE, CA 95131

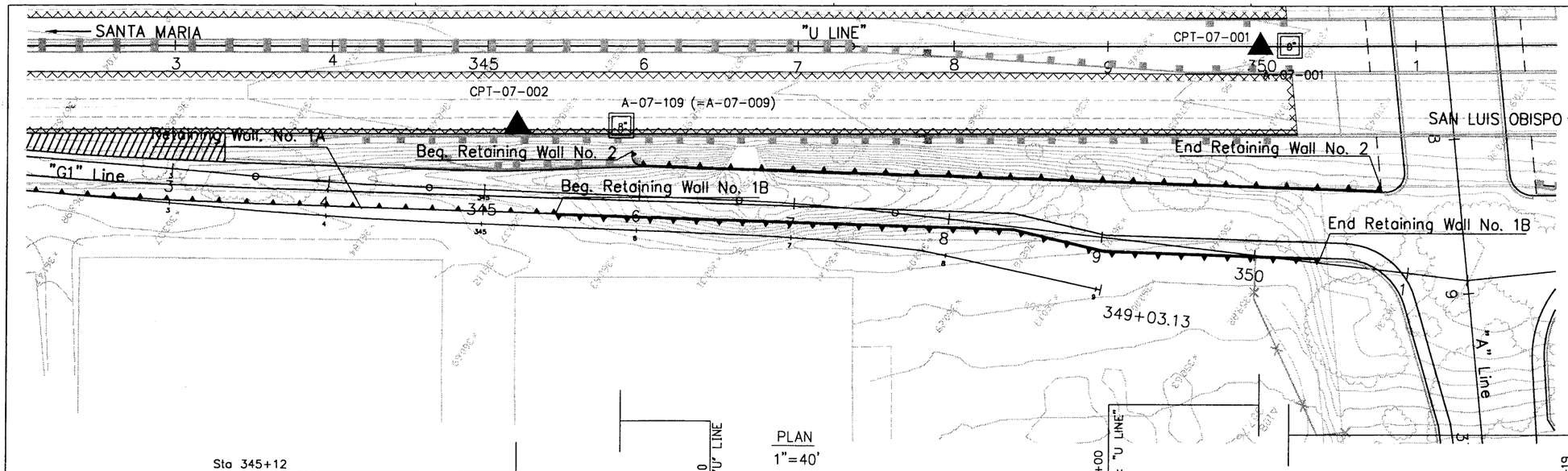


PLAN
1"=40'

Notes:
This LOTB sheet was prepared in accordance with the Caltrans Soil & Rock Logging Classification, and Presentation Manual (June 2007)

Standard Penetration Test Sampler: I.D. = 1.4"; O.D. = 2"
Modified California Sampler: I.D. = 2.5"; O.D. = 3"
Hammer Assembly: A 140 lb hammer with a 30" drop

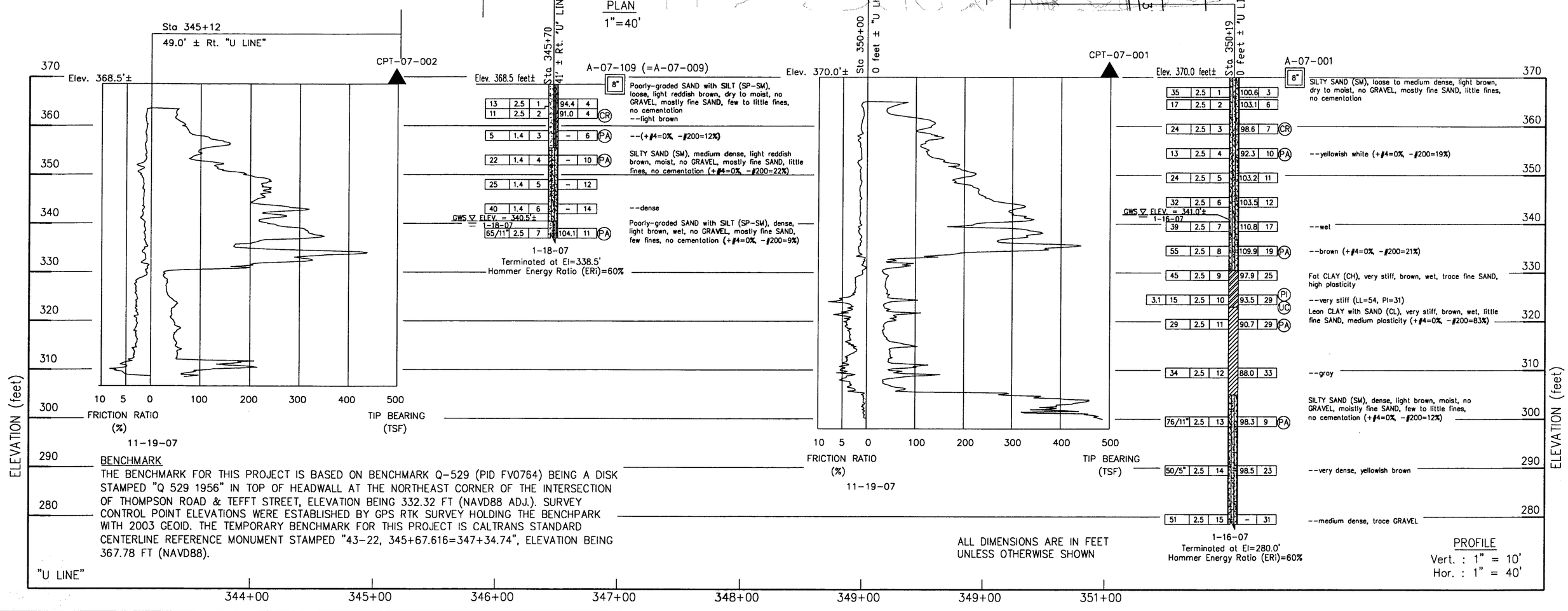


BENCHMARK

THE BENCHMARK FOR THIS PROJECT IS BASED ON BENCHMARK Q-529 (PID FV0764) BEING A DISK STAMPED "Q 529 1956" IN TOP OF HEADWALL AT THE NORTHEAST CORNER OF THE INTERSECTION OF THOMPSON ROAD & TEFFT STREET, ELEVATION BEING 332.32 FT (NAVD88 ADJ.). SURVEY CONTROL POINT ELEVATIONS WERE ESTABLISHED BY GPS RTK SURVEY HOLDING THE BENCHPARK WITH 2003 GEOID. THE TEMPORARY BENCHMARK FOR THIS PROJECT IS CALTRANS STANDARD CENTERLINE REFERENCE MONUMENT STAMPED "43-22, 345+67.616=347+34.74", ELEVATION BEING 367.78 FT (NAVD88).

ALL DIMENSIONS ARE IN FEET UNLESS OTHERWISE SHOWN

PROFILE
Vert. : 1" = 10'
Hor. : 1" = 40'

| | | | | | |
|---|---|---|---|---|---|
| DESIGN OVERSIGHT | DRAWN BY | L. TRAN | L. BHANGOO FIELD INVESTIGATION BY: | D. WANG PROJECT ENGINEER | BRIDGE NO. 49E0016 |
| SIGN OFF DATE | CHECKED BY | D. WANG | DATE: JANUARY AND NOVEMBER 2007 | | POST MILES 6.45 |

PREPARED FOR THE STATE OF CALIFORNIA DEPARTMENT OF TRANSPORTATION

CU 05
EA 474501

# WILLOW ROAD / ROUTE 101 INTERCHANGE

## LOG OF TEST BORINGS 2 OF 3

OGS GEOTECHNICAL LOG OF TEST BORINGS SHEET (ENGLISH) (REV. 06-01-09)

ORIGINAL SCALE IN INCHES FOR REDUCED PLANS 0 1 2 3

DISREGARD PRINTS BEARING EARLIER REVISION DATES

REVISION DATES: 11/07/08 4/30/09 2/09/09 1/15/10

SHEET 9 OF 10

Apr 30, 2010 - 10:10am S:\ADAD\203125.gpt\LOTB (RW-18).dwg

| DIST | COUNTY | ROUTE | POST MILES TOTAL PROJECT | SHEET No | TOTAL SHEETS |
|---|---|---|---|---|---|
| 05 | SLO | 101 | 5.9/6.9 | 249 | 290 |

GEOTECHNICAL PROFESSIONAL — DATE 4/30/10

PLANS APPROVAL DATE

REGISTERED PROFESSIONAL ENGINEER — GARY PARIKH — No. G.E. 666 — Exp. 12/31/11 — GEOTECHNICAL — STATE OF CALIFORNIA

The State of California or its officers or agents shall not be responsible for the accuracy or completeness of scanned copies of this plan sheet.

PARIKH CONSULTANTS, INC.
2360 QUME DRIVE, SUITE A
SAN JOSE, CA 95131

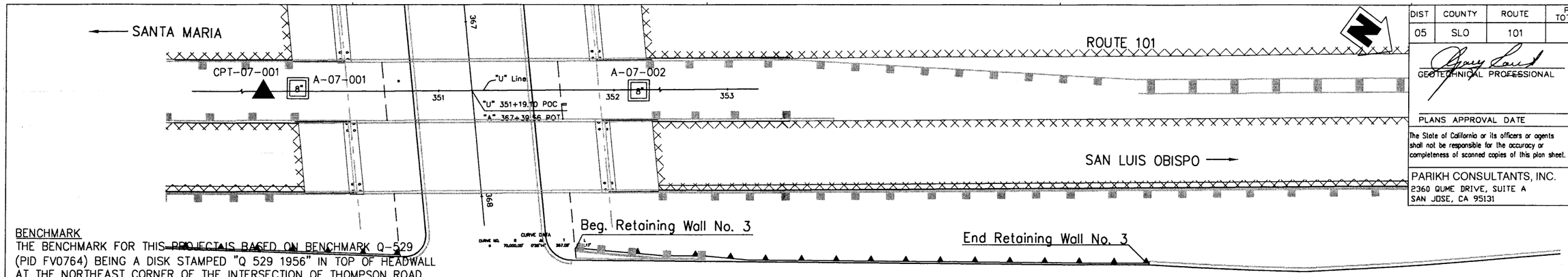


BENCHMARK
THE BENCHMARK FOR THIS PROJECT IS BASED ON BENCHMARK Q-529 (PID FV0764) BEING A DISK STAMPED "Q 529 1956" IN TOP OF HEADWALL AT THE NORTHEAST CORNER OF THE INTERSECTION OF THOMPSON ROAD & TEFFT STREET, ELEVATION BEING 332.32 FT (NAVD88 ADJ.). SURVEY CONTROL POINT ELEVATIONS WERE ESTABLISHED BY GPS RTK SURVEY HOLDING THE BENCHPARK WITH 2003 GEOID. THE TEMPORARY BENCHMARK FOR THIS PROJECT IS CALTRANS STANDARD CENTERLINE REFERENCE MONUMENT STAMPED "43-22, 345+67.616=347+34.74", ELEVATION BEING 367.78 FT (NAVD88).

PLAN
1"=30'

Notes:
This LOTB sheet was prepared in accordance with the Caltrans Soil & Rock Logging Classification, and Presentation Manual (June 2007)

Standard Penetration Test Sampler: I.D. = 1.4"; O.D. = 2"
Modified California Sampler: I.D. = 2.5"; O.D. = 3"
Hammer Assembly: A 140 lb hammer with a 30" drop

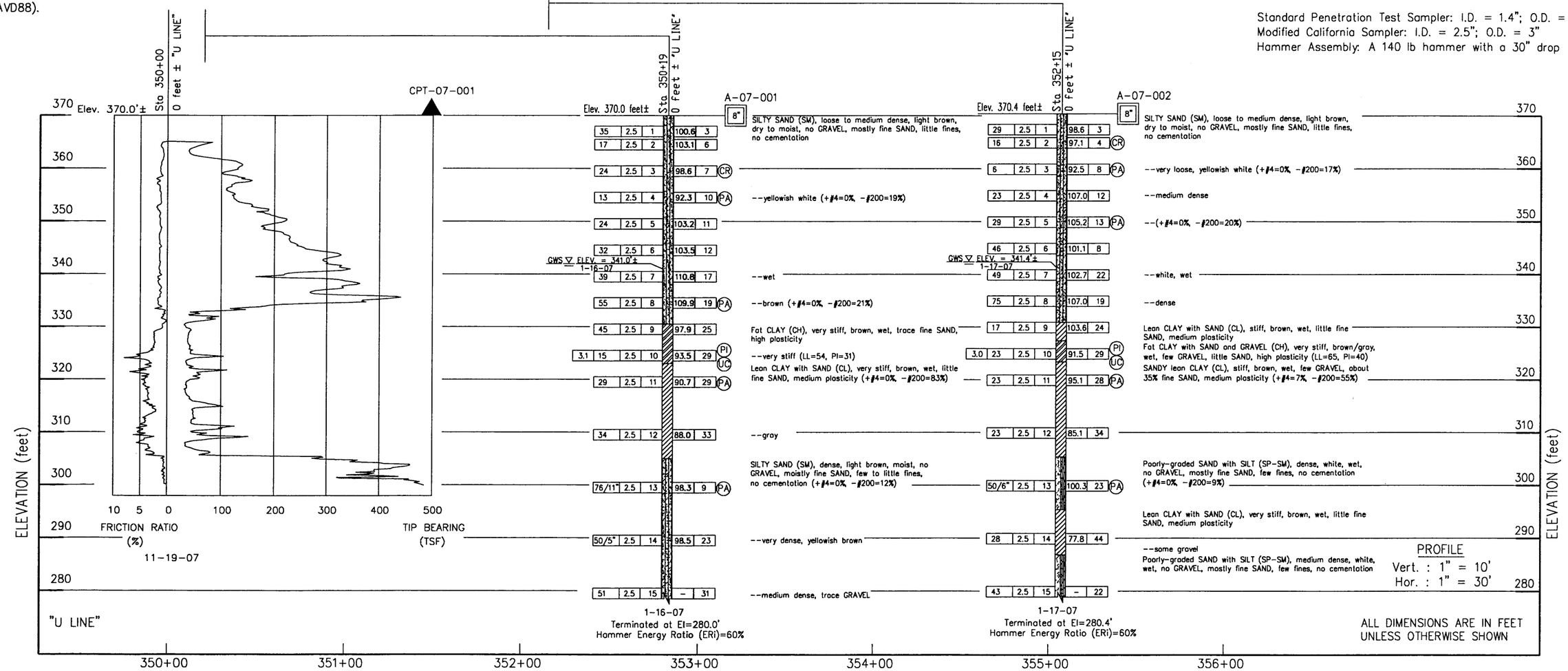


| | | | | | |
|---|---|---|---|---|---|
| DESIGN OVERSIGHT | DRAWN BY L. TRAN | L. BHANGOO FIELD INVESTIGATION BY: | PREPARED FOR THE STATE OF CALIFORNIA DEPARTMENT OF TRANSPORTATION | D. WANG PROJECT ENGINEER | BRIDGE NO. 49E0016 — WILLOW ROAD / ROUTE 101 INTERCHANGE |
| SIGN OFF DATE | CHECKED BY D. WANG | DATE: JANUARY AND NOVEMBER 2007 | | | POST MILES 6.45 — LOG OF TEST BORINGS 3 OF 3 |

OOS GEOTECHNICAL LOG OF TEST BORINGS SHEET (ENGLISH) (REV. 06-01-09)

ORIGINAL SCALE IN INCHES FOR REDUCED PLANS 0 1 2 3

CU 05
EA 474501

DISREGARD PRINTS BEARING EARLIER REVISION DATES — REVISION DATES 11/07/08 04/28/09 07/08/09 1/15/10

SHEET 10 OF 10

Apr 30, 2010 - 10:10am S:\ACAD\203125.gpt\LOTB (Bridge 18).dwg
Tran

| Dist | COUNTY | ROUTE | POST MILES TOTAL PROJECT | SHEET No. | TOTAL SHEETS |
|---|---|---|---|---|---|
| 05 | SLO | 101 | 5.9/6.9 | 250 | 290 |

Tony Keith
REGISTERED LANDSCAPE ARCHITECT — 05-05-10 DATE

LICENSED LANDSCAPE ARCHITECT — M. ANTHONY KEITH NO. 3673 — Signature — 10/31/10 Renewal Date — Date — STATE OF CALIFORNIA

PLANS APPROVAL DATE

*THE STATE OF CALIFORNIA OR ITS OFFICERS OR AGENTS SHALL NOT BE RESPONSIBLE FOR THE ACCURACY OR COMPLETENESS OF SCANNED COPIES OF THIS PLAN SHEET.*

RRM DESIGN GROUP
3765 S. HIGUERA ST., STE. 102
SAN LUIS OBISPO, CA 93401

COUNTY OF SAN LUIS OBISPO
DEPARTMENT OF PUBLIC WORKS
1050 MONTEREY STREET
SAN LUIS OBISPO, CA 93408

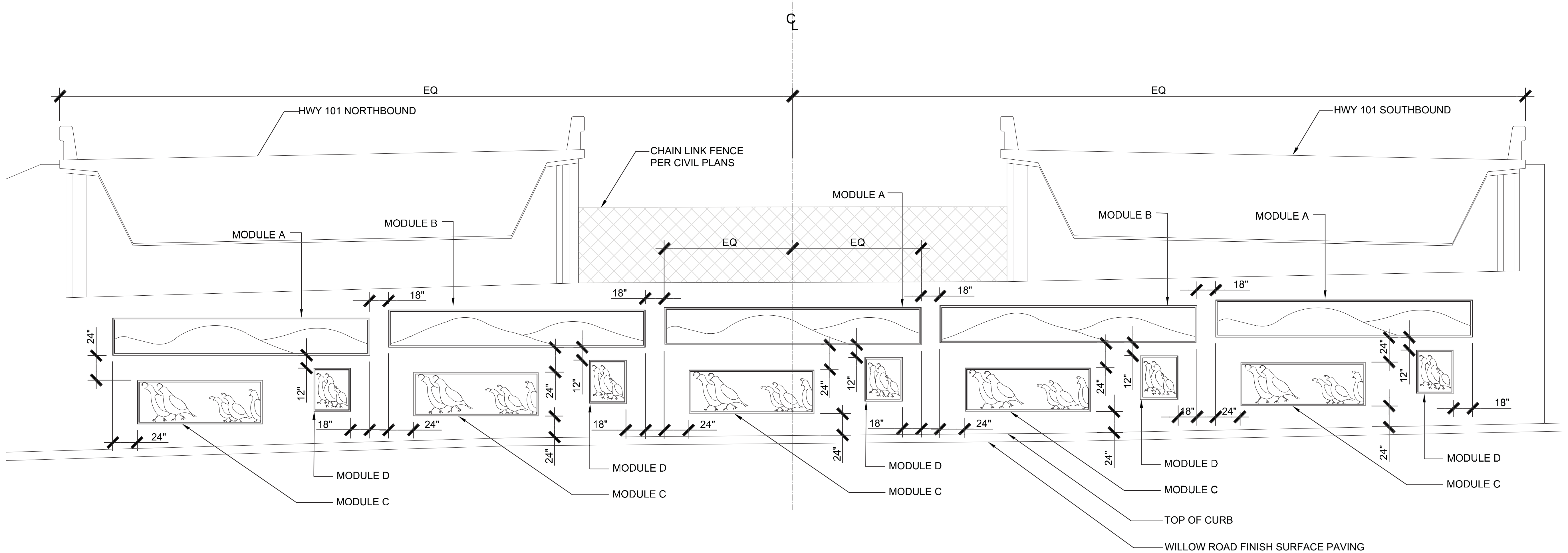


## ABUTMENT 1 SLOPE PAVING

### WILLOW ROAD EASTBOUND

NOTES:
A. ALL ART MODULES SHALL BE INSTALLED LEVEL.
B. QUAIL TO BE FACING IN DIRECTION OF TRAFFIC FLOW.
C. SEE CIVIL DRAWINGS FOR SLOPE PAVING AND BRIDGE DETAILS.
D. SEE ART MODULE DETAILS FOR FORMLINER AND CONCRETE STAMP DETAILS.
E. SLOPE PAVING ART MODULES SHALL BE STAMPED INTO CONCRETE. PROVIDE SHOP DRAWINGS INDICATING STAMP DIMENSIONS, TEXTURES, AND A COMPLETE LIST OF INSTALLATION ACCESSORIES, INCLUDING RELEASE AGENT.

THIS PLAN ACCURATE FOR ART WORK ONLY

SCALE: 1" = 4'

REVISED BY | DATE REVISED
LWIERSCHEM | LMCKAY
CALCULATED-DESIGNED BY | CHECKED BY
CONSULTANT FUNCTIONAL SUPERVISOR — RRM DESIGN GROUP
STATE OF CALIFORNIA - DEPARTMENT OF TRANSPORTATION — Caltrans — SLOPE PAVING ART LAYOUT

DATE PLOTTED => $DATE
TIME PLOTTED => $TIME
LAST REVISION 05-05-10

# SLOPE PAVING LAYOUT
# A1

| Dist | COUNTY | ROUTE | POST MILES TOTAL PROJECT | SHEET No. | TOTAL SHEETS |
|---|---|---|---|---|---|
| 05 | SLO | 101 | 5.9/6.9 | 251 | 290 |

REGISTERED LANDSCAPE ARCHITECT — DATE 05-05-10

PLANS APPROVAL DATE

LICENSED LANDSCAPE ARCHITECT — M. ANTONY KEITH NO. 3623 — Signature — 10/31/10 Renewal Date — Date — STATE OF CALIFORNIA

*THE STATE OF CALIFORNIA OR ITS OFFICERS OR AGENTS SHALL NOT BE RESPONSIBLE FOR THE ACCURACY OR COMPLETENESS OF SCANNED COPIES OF THIS PLAN SHEET.*

RRM DESIGN GROUP
3765 S. HIGUERA ST., STE. 102
SAN LUIS OBISPO, CA 93401

COUNTY OF SAN LUIS OBISPO
DEPARTMENT OF PUBLIC WORKS
1050 MONTEREY STREET
SAN LUIS OBISPO, CA 93408

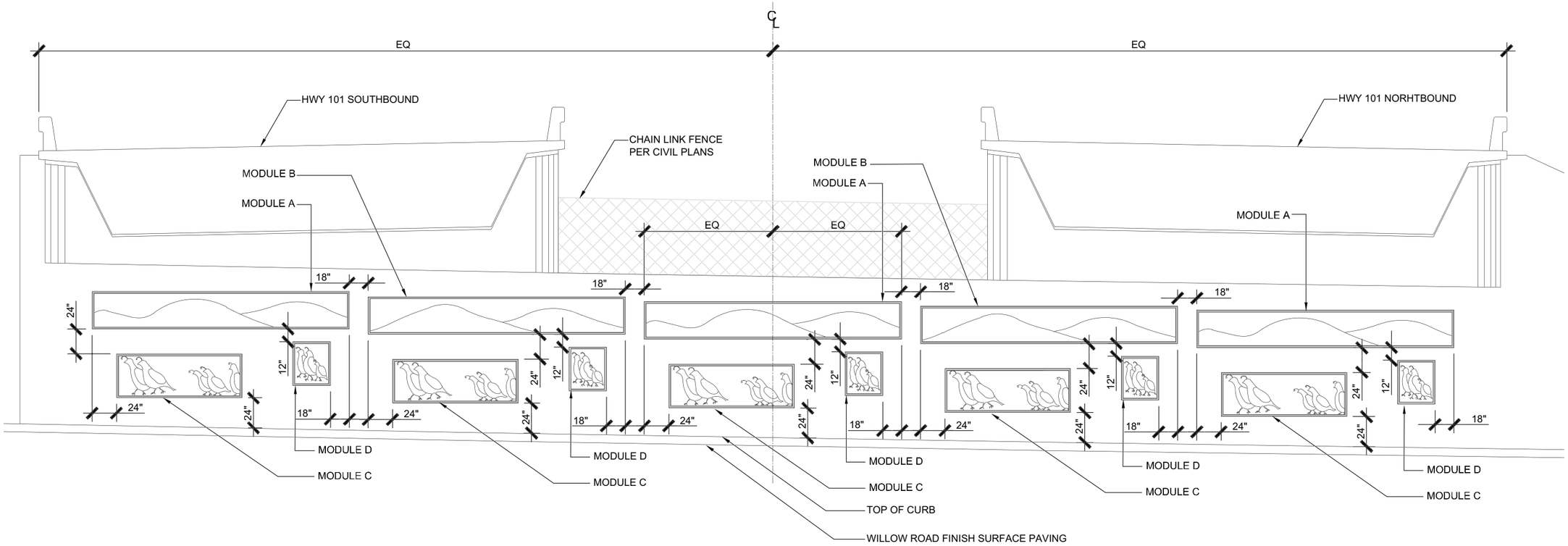


# ABUTMENT 2 SLOPE PAVING

## WILLOW ROAD WESTBOUND

NOTES:

A. ALL ART MODULES SHALL BE INSTALLED LEVEL.
B. QUAIL TO BE FACING IN DIRECTION OF TRAFFIC FLOW.
C. SEE CIVIL DRAWINGS FOR SLOPE PAVING AND BRIDGE DETAILS.
D. SEE ART MODULE DETAILS FOR FORMLINER AND CONCRETE STAMP DETAILS.
E. SLOPE PAVING ART MODULES SHALL BE STAMPED INTO CONCRETE.
PROVIDE SHOP DRAWINGS INDICATING STAMP DIMENSIONS, TEXTURES,
AND A COMPLETE LIST OF INSTALLATION ACCESSORIES, INCLUDING RELEASE AGENT.

THIS PLAN ACCURATE FOR ART WORK ONLY

SCALE: 1" = 4'

# SLOPE PAVING LAYOUT
A2

REVISED BY | DATE REVISED
LWIERSCHEM | LMCKAY
CALCULATED-DESIGNED BY | CHECKED BY
CONSULTANT FUNCTIONAL SUPERVISOR: RRM DESIGN GROUP
STATE OF CALIFORNIA - DEPARTMENT OF TRANSPORTATION
SLOPE PAVING ART LAYOUT

LAST REVISION 05-05-10 | DATE PLOTTED => $DATE | TIME PLOTTED => $TIME

BORDER LAST REVISED 4/11/2008 | RELATIVE BORDER SCALE IS IN INCHES 0 1 2 3 | USERNAME => $USER | DGN FILE => $REQUEST | CU | EA 05-474503

| Dist | COUNTY | ROUTE | POST MILES TOTAL PROJECT | SHEET No. | TOTAL SHEETS |
|---|---|---|---|---|---|
| 05 | SLO | 101 | 5.9/6.9 | 252 | 290 |

REGISTERED LANDSCAPE ARCHITECT — DATE 05-05-10

PLANS APPROVAL DATE

LICENSED LANDSCAPE ARCHITECT — W. ANTONY KEITH NO. 3623 — Signature — 10/31/10 Renewal Date — Date — STATE OF CALIFORNIA

*THE STATE OF CALIFORNIA OR ITS OFFICERS OR AGENTS SHALL NOT BE RESPONSIBLE FOR THE ACCURACY OR COMPLETENESS OF SCANNED COPIES OF THIS PLAN SHEET.*

RRM DESIGN GROUP
3765 S. HIGUERA ST., STE. 102
SAN LUIS OBISPO, CA 93401

COUNTY OF SAN LUIS OBISPO
DEPARTMENT OF PUBLIC WORKS
1050 MONTEREY STREET
SAN LUIS OBISPO, CA 93408

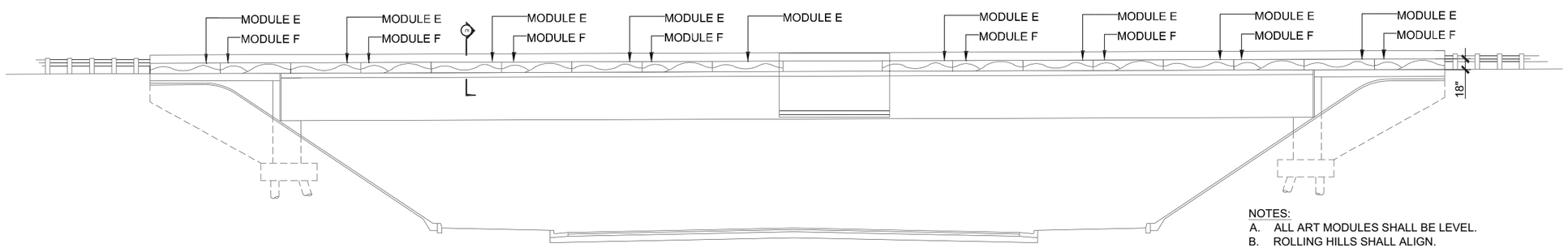


## ELEVATION

BRIDGE BARRIER FORMLINER PATTERN
FINISHED CONCRETE SURFACE

NOTES:

A. ALL ART MODULES SHALL BE LEVEL.
B. ROLLING HILLS SHALL ALIGN.
C. SEE CIVIL DRAWINGS FOR BRIDGE DETAILS.
D. ART MODULES SHALL BE CENTERED BETWEEN EXPANSION JOINTS AND/OR WEAKENED PLANES.
E. SEE ART MODULE DETAILS FOR FORMLINER AND CONCRETE STAMP DETAILS.
F. WALL ART MODULES SHALL BE FORMLINED INTO CONCRETE. PROVIDE SHOP DRAWINGS INDICATING EXACT LAYOUT ON CONCRETE SURFACES, FORMLINER DIMENSIONS, TEXTURES, AND A COMPLETE LIST OF INSTALLATION ACCESSORIES, INCLUDING RELEASE AGENT.

THIS PLAN ACCURATE FOR ART WORK ONLY

8 0 4 8 16 32
SCALE: 1" = 8'

# BRIDGE BARRIER ART LAYOUT
A3

REVISED BY | DATE REVISED
LWIERSCHEM | LMCKAY
CALCULATED-DESIGNED BY | CHECKED BY
CONSULTANT FUNCTIONAL SUPERVISOR | RRM DESIGN GROUP
STATE OF CALIFORNIA - DEPARTMENT OF TRANSPORTATION | Caltrans | WALL ART LAYOUT

DATE PLOTTED => $DATE
TIME PLOTTED => $TIME
LAST REVISION 05-05-10

| Dist | COUNTY | ROUTE | POST MILES TOTAL PROJECT | SHEET No. | TOTAL SHEETS |
|---|---|---|---|---|---|
| 05 | SLO | 101 | 5.9/6.9 | 253 | 290 |

REGISTERED LANDSCAPE ARCHITECT — DATE 05-05-10

PLANS APPROVAL DATE

LICENSED LANDSCAPE ARCHITECT — M. ANTONY KEITH NO. 3623 — Signature — Renewal Date 10/31/10 — Date — STATE OF CALIFORNIA

*THE STATE OF CALIFORNIA OR ITS OFFICERS OR AGENTS SHALL NOT BE RESPONSIBLE FOR THE ACCURACY OR COMPLETENESS OF SCANNED COPIES OF THIS PLAN SHEET.*

RRM DESIGN GROUP
3765 S. HIGUERA ST., STE. 102
SAN LUIS OBISPO, CA 93401

COUNTY OF SAN LUIS OBISPO
DEPARTMENT OF PUBLIC WORKS
1050 MONTEREY STREET
SAN LUIS OBISPO, CA 93408

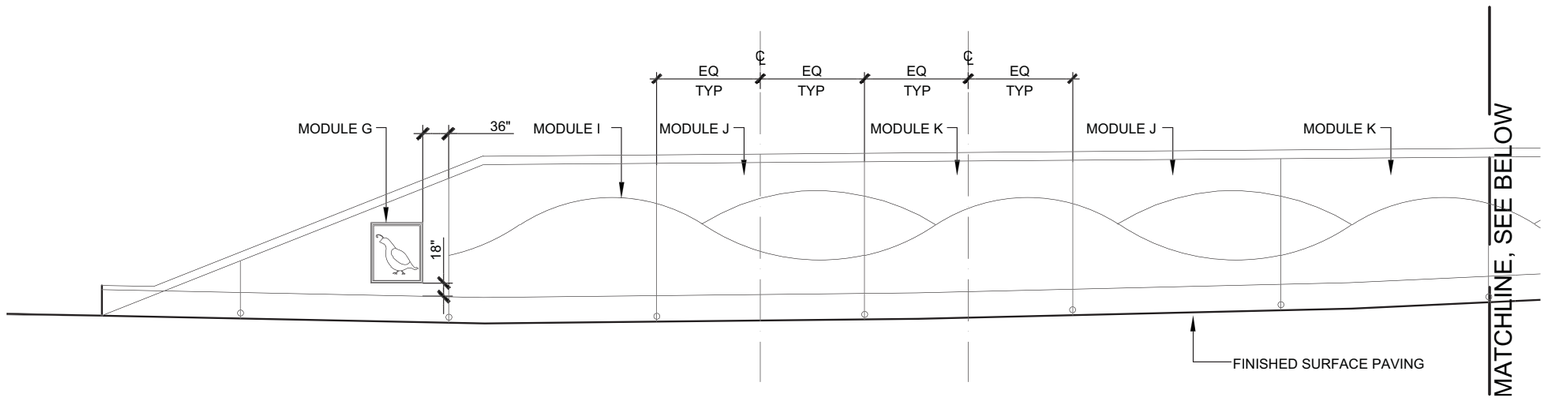


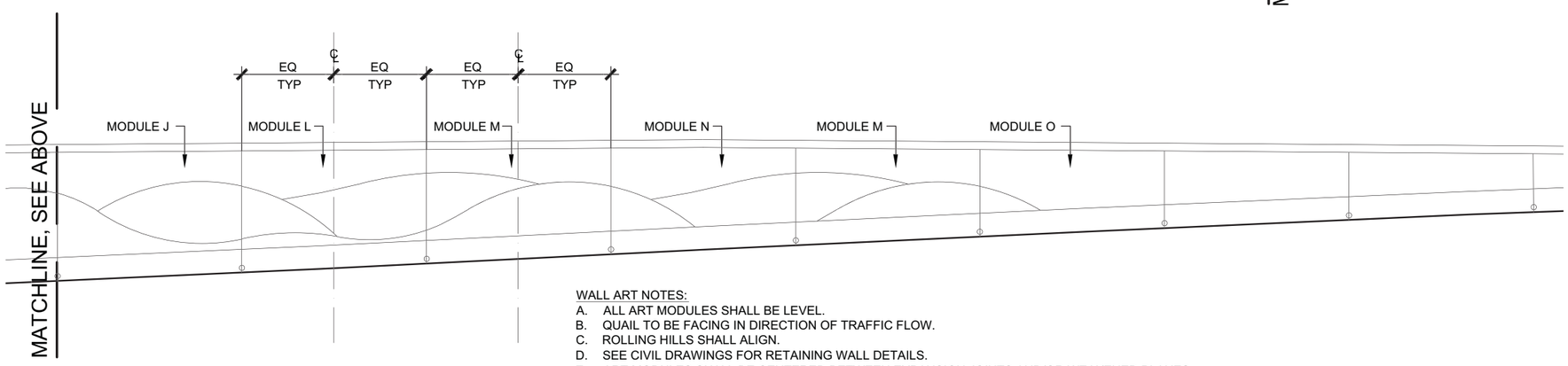


WALL ART NOTES:

A. ALL ART MODULES SHALL BE LEVEL.
B. QUAIL TO BE FACING IN DIRECTION OF TRAFFIC FLOW.
C. ROLLING HILLS SHALL ALIGN.
D. SEE CIVIL DRAWINGS FOR RETAINING WALL DETAILS.
E. ART MODULES SHALL BE CENTERED BETWEEN EXPANSION JOINTS AND/OR WEAKENED PLANES.
F. SEE ART MODULE DETAILS FOR FORMLINER AND CONCRETE STAMP DETAILS.
G. WALL ART MODULES SHALL BE FORMLINED INTO CONCRETE. PROVIDE SHOP DRAWINGS INDICATING FORMLINER DIMENSIONS, TEXTURES, AND A COMPLETE LIST OF INSTALLATION ACCESSORIES, INCLUDING RELEASE AGENT.
H. TEXTURE "B" - HEAVY SANDBLAST - SHALL BE APPLIED TO WALL WHERE MODULE HAS NOT BEEN PLACED.

RW NO. 1B - SEE CIVIL PLANS FOR LOCATION

THIS PLAN ACCURATE FOR ART WORK ONLY

SCALE: 1" = 8'

# WALL ART LAYOUT
A4

STATE OF CALIFORNIA - DEPARTMENT OF TRANSPORTATION — Caltrans
WALL ART LAYOUT
CONSULTANT FUNCTIONAL SUPERVISOR: RRM DESIGN GROUP
CALCULATED-DESIGNED BY: LWIERSCHEM
CHECKED BY: LMCKAY
REVISED BY
DATE REVISED

LAST REVISION 05-05-10
DATE PLOTTED => $DATE
TIME PLOTTED => $TIME

| Dist | COUNTY | ROUTE | POST MILES TOTAL PROJECT | SHEET No. | TOTAL SHEETS |
|---|---|---|---|---|---|
| 05 | SLO | 101 | 5.9/6.9 | 254 | 290 |

REGISTERED LANDSCAPE ARCHITECT — DATE 05-05-10

PLANS APPROVAL DATE

LICENSED LANDSCAPE ARCHITECT — M. ANTYONE KEITH NO. 3825 — Signature — Renewal Date 10/31/10 — Date — STATE OF CALIFORNIA

*THE STATE OF CALIFORNIA OR ITS OFFICERS OR AGENTS SHALL NOT BE RESPONSIBLE FOR THE ACCURACY OR COMPLETENESS OF SCANNED COPIES OF THIS PLAN SHEET.*

RRM DESIGN GROUP
3765 S. HIGUERA ST., STE. 102
SAN LUIS OBISPO, CA 93401

COUNTY OF SAN LUIS OBISPO
DEPARTMENT OF PUBLIC WORKS
1050 MONTEREY STREET
SAN LUIS OBISPO, CA 93408

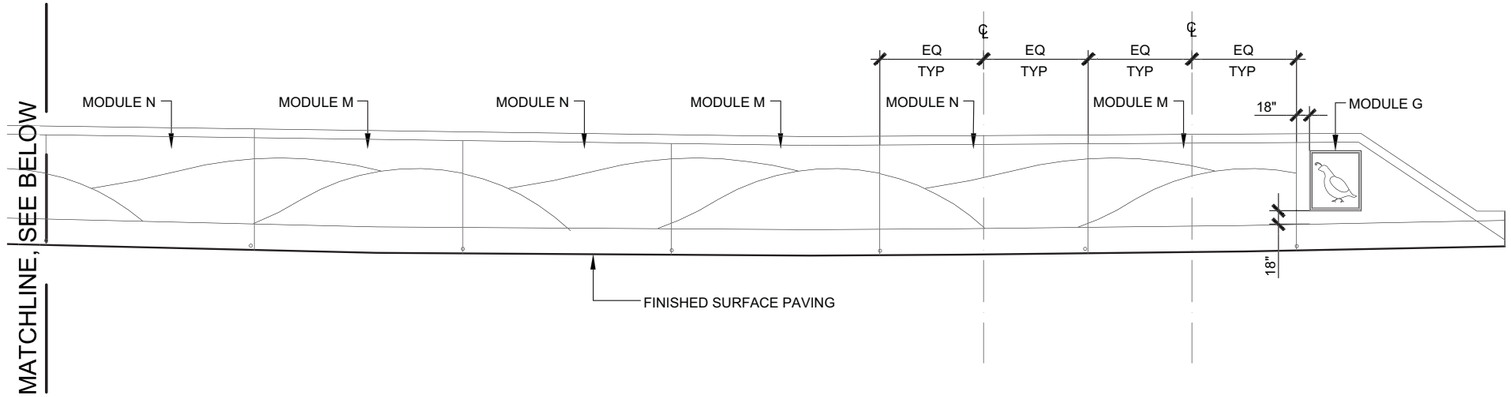


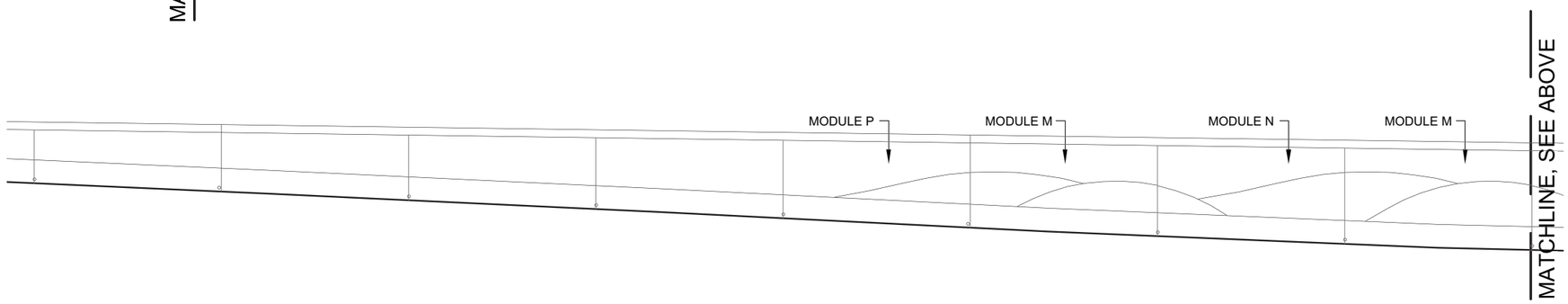


RW NO. 2 - SEE CIVIL PLANS FOR LOCATION

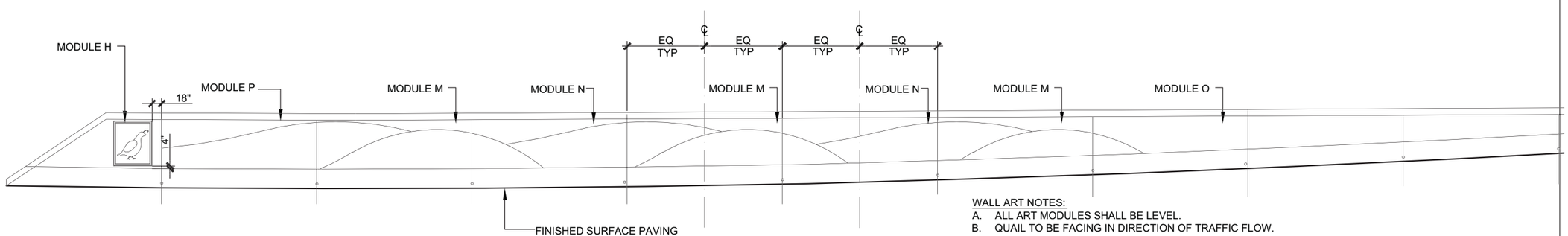


WALL ART NOTES:

A. ALL ART MODULES SHALL BE LEVEL.
B. QUAIL TO BE FACING IN DIRECTION OF TRAFFIC FLOW.
C. ROLLING HILLS SHALL ALIGN.
D. SEE CIVIL DRAWINGS FOR RETAINING WALL DETAILS.
E. ART MODULES SHALL BE CENTERED BETWEEN EXPANSION JOINTS AND/OR WEAKENED PLANES.
F. SEE ART MODULE DETAILS FOR FORMLINER AND CONCRETE STAMP DETAILS.
G. WALL ART MODULES SHALL BE FORMLINED INTO CONCRETE. PROVIDE SHOP DRAWINGS INDICATING FORMLINER DIMENSIONS, TEXTURES, AND A COMPLETE LIST OF INSTALLATION ACCESSORIES, INCLUDING RELEASE AGENT.
H. TEXTURE "B" - HEAVY SANDBLAST - SHALL BE APPLIED TO WALL WHERE MODULE HAS NOT BEEN PLACED.

RW NO. 3 - SEE CIVIL PLANS FOR LOCATION

THIS PLAN ACCURATE FOR ART WORK ONLY

SCALE: 1" = 8'

# WALL ART LAYOUT
A5

STATE OF CALIFORNIA - DEPARTMENT OF TRANSPORTATION — Caltrans
WALL ART LAYOUT
CONSULTANT FUNCTIONAL SUPERVISOR: RRM DESIGN GROUP
CALCULATED-DESIGNED BY: LWIERSCHEM — CHECKED BY: LMCKAY
REVISED BY — DATE REVISED

DATE PLOTTED => $DATE
TIME PLOTTED => $TIME
LAST REVISION 05-05-10

BORDER LAST REVISED 4/11/2008 — RELATIVE BORDER SCALE IS IN INCHES 0 1 2 3 — USERNAME => $USER — DGN FILE => $REQUEST — CU — EA 05-474503

| Dist | COUNTY | ROUTE | POST MILES TOTAL PROJECT | SHEET No. | TOTAL SHEETS |
|---|---|---|---|---|---|
| 05 | SLO | 101 | 5.9/6.9 | 255 | 290 |

REGISTERED LANDSCAPE ARCHITECT — DATE 05-05-10

PLANS APPROVAL DATE

LICENSED LANDSCAPE ARCHITECT — M. ANTONY KEITH NO. 3873 — Signature — 10/31/10 Renewal Date — Date — STATE OF CALIFORNIA

*THE STATE OF CALIFORNIA OR ITS OFFICERS OR AGENTS SHALL NOT BE RESPONSIBLE FOR THE ACCURACY OR COMPLETENESS OF SCANNED COPIES OF THIS PLAN SHEET.*

RRM DESIGN GROUP
3765 S. HIGUERA ST., STE. 102
SAN LUIS OBISPO, CA 93401

COUNTY OF SAN LUIS OBISPO
DEPARTMENT OF PUBLIC WORKS
1050 MONTEREY STREET
SAN LUIS OBISPO, CA 93408

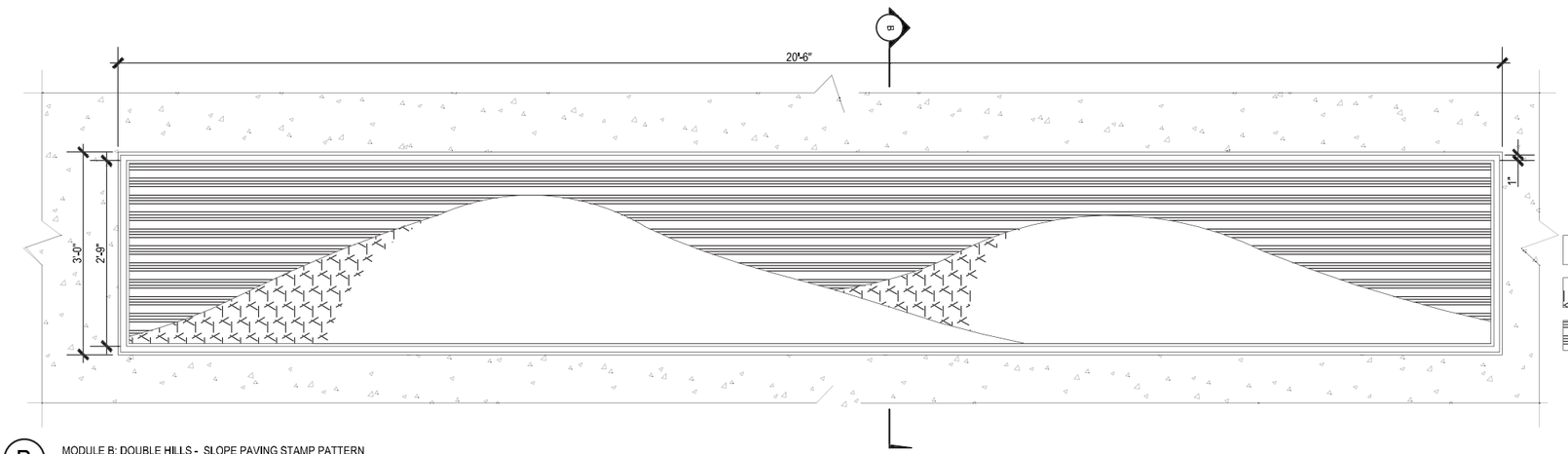


TEXTURE "A": SMOOTH FORM
TEXTURE "B": HEAVY SANDBLAST
TEXTURE "C": FLUTED RIB

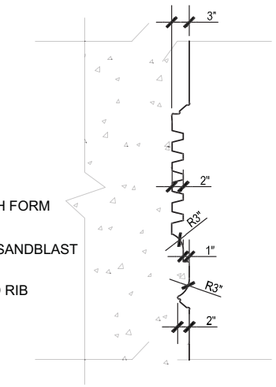


SECTION B

B MODULE B: DOUBLE HILLS - SLOPE PAVING STAMP PATTERN

1" = 1'-0"

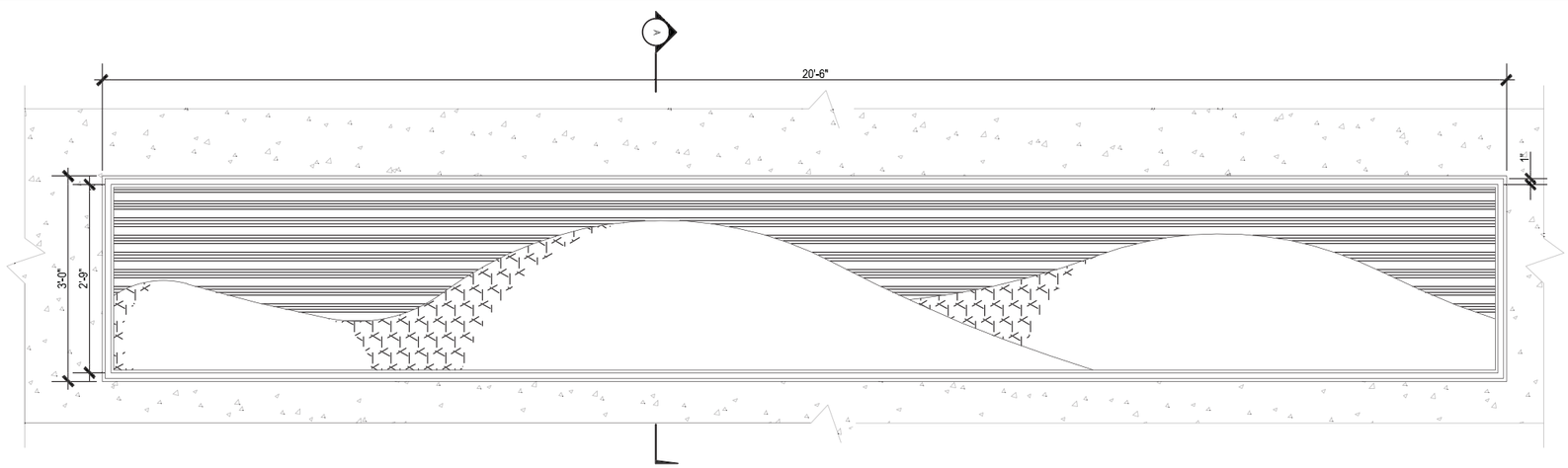


TEXTURE "A": SMOOTH FORM
TEXTURE "B": HEAVY SANDBLAST
TEXTURE "C": FLUTED RIB

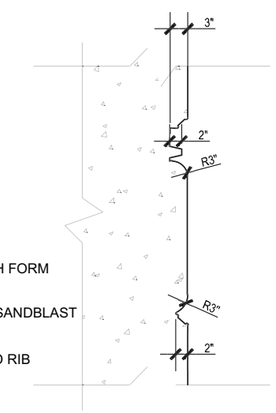


SECTION A

A MODULE A: TRIPLE HILLS - SLOPE PAVING STAMP PATTERN

THIS PLAN ACCURATE FOR ART WORK ONLY

1" = 1'-0"

# DETAILS
# A6

STATE OF CALIFORNIA - DEPARTMENT OF TRANSPORTATION
Caltrans
CONSULTANT FUNCTIONAL SUPERVISOR: RRM DESIGN GROUP
ART DETAILS

REVISED BY | DATE REVISED
LWIERSCHEM | LMCKAY
CALCULATED-DESIGNED BY | CHECKED BY

DATE PLOTTED => $DATE
TIME PLOTTED => $TIME
LAST REVISION 05-05-10

| Dist | COUNTY | ROUTE | POST MILES TOTAL PROJECT | SHEET No. | TOTAL SHEETS |
|---|---|---|---|---|---|
| 05 | SLO | 101 | 5.9/6.9 | 256 | 290 |

REGISTERED LANDSCAPE ARCHITECT — DATE: 05-05-10

PLANS APPROVAL DATE

LICENSED LANDSCAPE ARCHITECT — M. ANTONY KEITH NO. 3873 — Signature — 10/31/10 Renewal Date — Date — STATE OF CALIFORNIA

*THE STATE OF CALIFORNIA OR ITS OFFICERS OR AGENTS SHALL NOT BE RESPONSIBLE FOR THE ACCURACY OR COMPLETENESS OF SCANNED COPIES OF THIS PLAN SHEET.*

RRM DESIGN GROUP
3765 S. HIGUERA ST., STE. 102
SAN LUIS OBISPO, CA 93401

COUNTY OF SAN LUIS OBISPO
DEPARTMENT OF PUBLIC WORKS
1050 MONTEREY STREET
SAN LUIS OBISPO, CA 93408

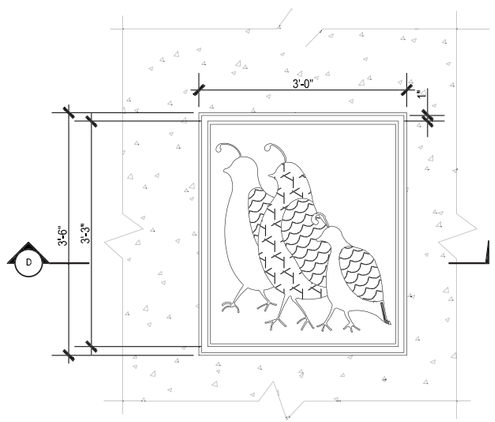


TEXTURE "A": SMOOTH FORM

TEXTURE "B": HEAVY SANDBLAST

TEXTURE "D": FEATHERS

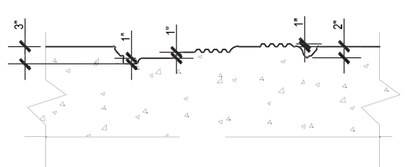


SECTION D

D — MODULE D: THREE QUAIL - SLOPE PAVING STAMP PATTERN

1" = 1'-0"

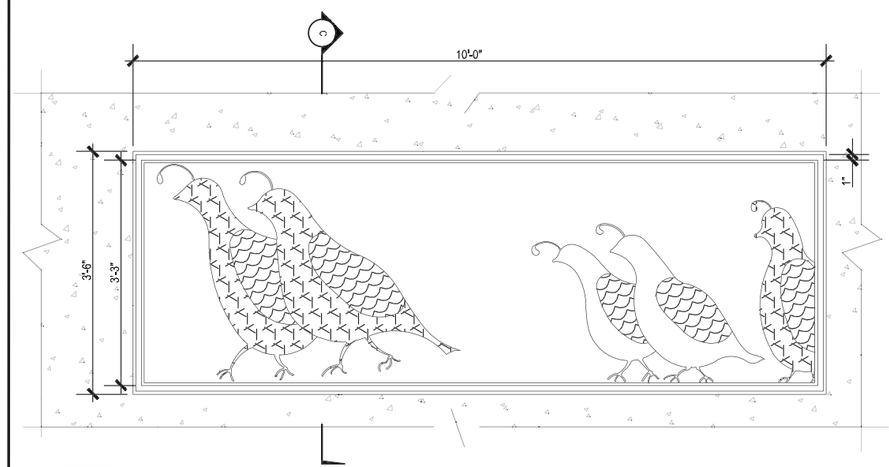


TEXTURE "A": SMOOTH FORM

TEXTURE "B": HEAVY SANDBLAST

TEXTURE "D": FEATHERS

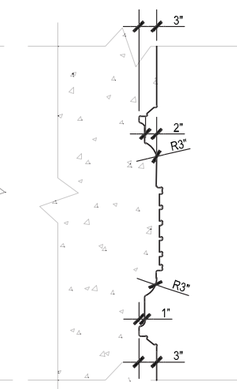


SECTION C

C — MODULE C: FIVE QUAIL - SLOPE PAVING STAMP PATTERN

1" = 1'-0"

THIS PLAN ACCURATE FOR ART WORK ONLY

STATE OF CALIFORNIA - DEPARTMENT OF TRANSPORTATION

Caltrans

ART DETAILS

CONSULTANT FUNCTIONAL SUPERVISOR: RRM DESIGN GROUP

CALCULATED-DESIGNED BY: LWIERSCHEM

CHECKED BY: LMCKAY

REVISED BY

DATE REVISED

DATE PLOTTED => $DATE

TIME PLOTTED => $TIME

LAST REVISION 05-05-10

# DETAILS
# A7

BORDER LAST REVISED 4/11/2008

RELATIVE BORDER SCALE IS IN INCHES 0 1 2 3

USERNAME => $USER

DGN FILE => $REQUEST

CU

EA 05-474503

| Dist | COUNTY | ROUTE | POST MILES TOTAL PROJECT | SHEET No. | TOTAL SHEETS |
|---|---|---|---|---|---|
| 05 | SLO | 101 | 5.9/6.9 | 257 | 290 |

REGISTERED LANDSCAPE ARCHITECT — DATE 05-05-10

PLANS APPROVAL DATE

LICENSED LANDSCAPE ARCHITECT — M. ANTONY KEITH NO. 3623 — Signature — 10/31/10 Renewal Date — Date — STATE OF CALIFORNIA

*THE STATE OF CALIFORNIA OR ITS OFFICERS OR AGENTS SHALL NOT BE RESPONSIBLE FOR THE ACCURACY OR COMPLETENESS OF SCANNED COPIES OF THIS PLAN SHEET.*

RRM DESIGN GROUP
3765 S. HIGUERA ST., STE. 102
SAN LUIS OBISPO, CA 93401

COUNTY OF SAN LUIS OBISPO
DEPARTMENT OF PUBLIC WORKS
1050 MONTEREY STREET
SAN LUIS OBISPO, CA 93408

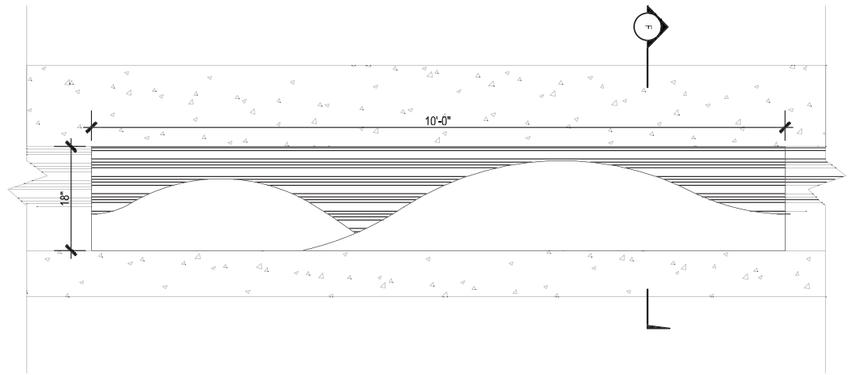


TEXTURE "A": SMOOTH FORM

TEXTURE "C": FLUTED RIB

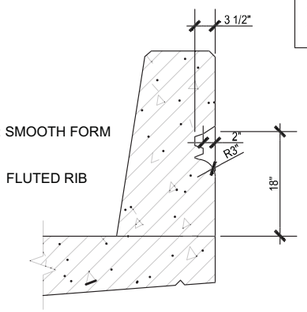


SECTION F

F — MODULE F: ROLLING HILLS - BARRIER FORMLINER PATTERN

1" = 1'-0"

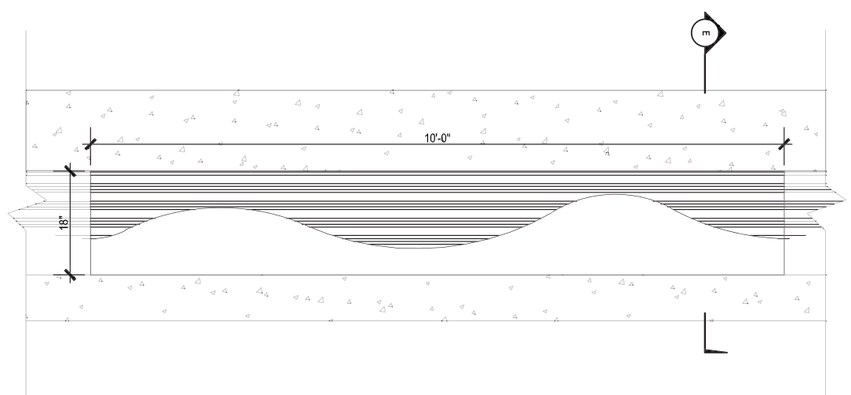


TEXTURE "A": SMOOTH FORM

TEXTURE "C": FLUTED RIB

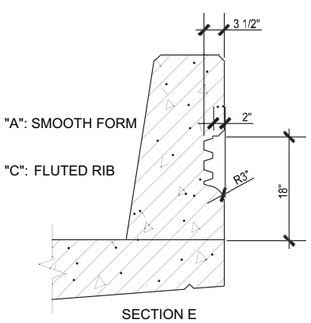


SECTION E

E — MODULE E: ROLLING HILLS - BARRIER FORMLINER PATTERN

1" = 1'-0"

THIS PLAN ACCURATE FOR ART WORK ONLY

STATE OF CALIFORNIA - DEPARTMENT OF TRANSPORTATION
Caltrans
ART DETAILS

CONSULTANT FUNCTIONAL SUPERVISOR: RRM DESIGN GROUP

CALCULATED-DESIGNED BY: LWIERSCHEM
CHECKED BY: LMCKAY

REVISED BY
DATE REVISED

# DETAILS
# A8

LAST REVISION 05-05-10
DATE PLOTTED => $DATE
TIME PLOTTED => $TIME

| Dist | COUNTY | ROUTE | POST MILES TOTAL PROJECT | SHEET No. | TOTAL SHEETS |
|---|---|---|---|---|---|
| 05 | SLO | 101 | 5.9/6.9 | 258 | 290 |

REGISTERED LANDSCAPE ARCHITECT — 05-05-10 DATE

PLANS APPROVAL DATE

LICENSED LANDSCAPE ARCHITECT — M. ANTHONY KEITH NO. 3873 — Signature — 10/31/10 Renewal Date — Date — STATE OF CALIFORNIA

*THE STATE OF CALIFORNIA OR ITS OFFICERS OR AGENTS SHALL NOT BE RESPONSIBLE FOR THE ACCURACY OR COMPLETENESS OF SCANNED COPIES OF THIS PLAN SHEET.*

RRM DESIGN GROUP
3765 S. HIGUERA ST., STE. 102
SAN LUIS OBISPO, CA 93401

COUNTY OF SAN LUIS OBISPO
DEPARTMENT OF PUBLIC WORKS
1050 MONTEREY STREET
SAN LUIS OBISPO, CA 93408

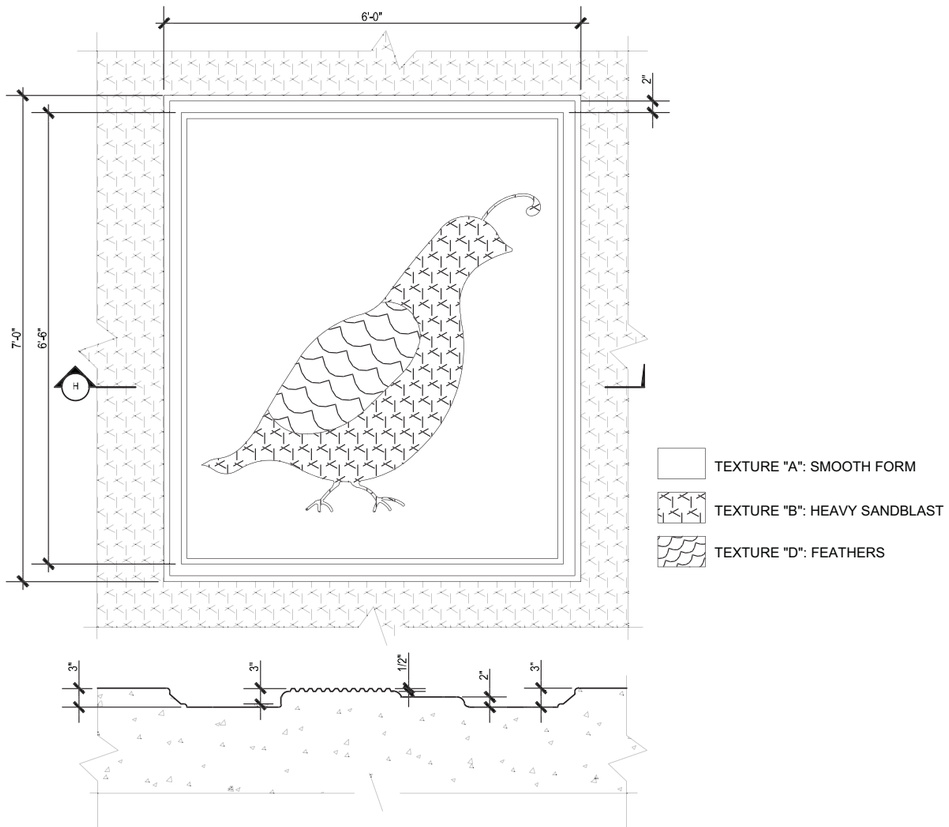


TEXTURE "A": SMOOTH FORM
TEXTURE "B": HEAVY SANDBLAST
TEXTURE "D": FEATHERS

SECTION H

H — MODULE H: SINGLE QUAIL RETAINING WALL FORMLINER PATTERN 1"=1'-0"

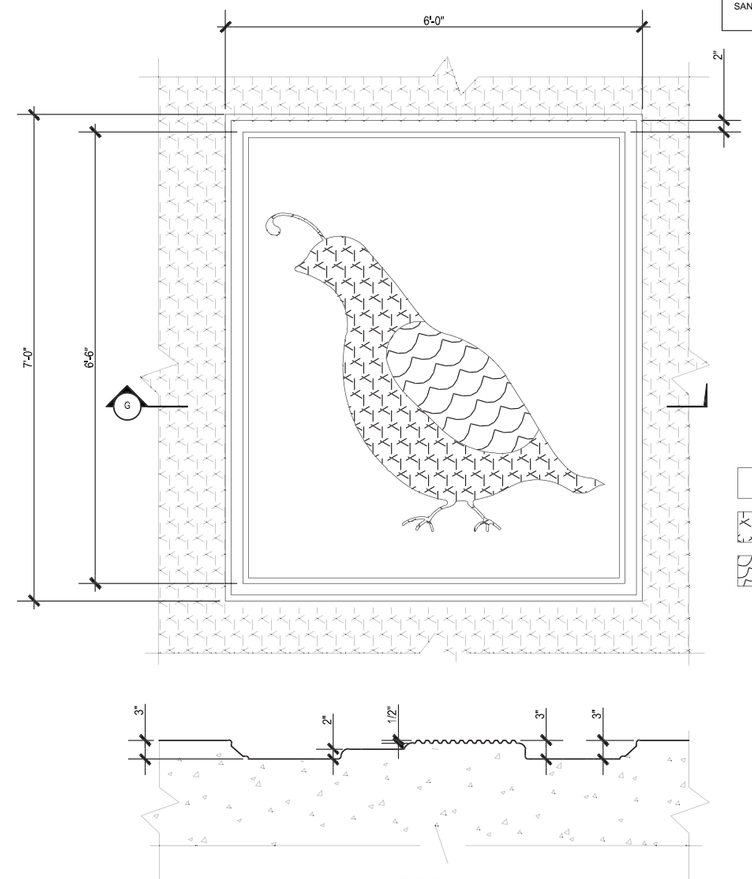


TEXTURE "A": SMOOTH FORM
TEXTURE "B": HEAVY SANDBLAST
TEXTURE "D": FEATHERS

SECTION G

G — MODULE G: SINGLE QUAIL RETAINING WALL FORMLINER PATTERN 1"=1'-0"

THIS PLAN ACCURATE FOR ART WORK ONLY

# DETAILS
# A9

| | |
|---|---|
| REVISED BY | |
| DATE REVISED | |
| LWIERSCHEM | |
| LMCKAY | |
| CALCULATED-DESIGNED BY | |
| CHECKED BY | |
| CONSULTANT FUNCTIONAL SUPERVISOR | |
| RRM DESIGN GROUP | |
| STATE OF CALIFORNIA - DEPARTMENT OF TRANSPORTATION | |
| ART DETAILS | |

DATE PLOTTED => $DATE
TIME PLOTTED => $TIME
LAST REVISION 05-05-10

BORDER LAST REVISED 4/11/2008 | RELATIVE BORDER SCALE IS IN INCHES 0 1 2 3 | USERNAME => $USER DGN FILE => $REQUEST | CU | EA 05-474503

| Dist | COUNTY | ROUTE | POST MILES TOTAL PROJECT | SHEET No. | TOTAL SHEETS |
|---|---|---|---|---|---|
| 05 | SLO | 101 | 5.9/6.9 | 259 | 290 |

REGISTERED LANDSCAPE ARCHITECT — DATE 05-05-10

PLANS APPROVAL DATE

LICENSED LANDSCAPE ARCHITECT — M. ANTONY KEITH NO. 3873 — Signature — 10/31/10 Renewal Date — Date — STATE OF CALIFORNIA

*THE STATE OF CALIFORNIA OR ITS OFFICERS OR AGENTS SHALL NOT BE RESPONSIBLE FOR THE ACCURACY OR COMPLETENESS OF SCANNED COPIES OF THIS PLAN SHEET.*

RRM DESIGN GROUP
3765 S. HIGUERA ST., STE. 102
SAN LUIS OBISPO, CA 93401

COUNTY OF SAN LUIS OBISPO
DEPARTMENT OF PUBLIC WORKS
1050 MONTEREY STREET
SAN LUIS OBISPO, CA 93408

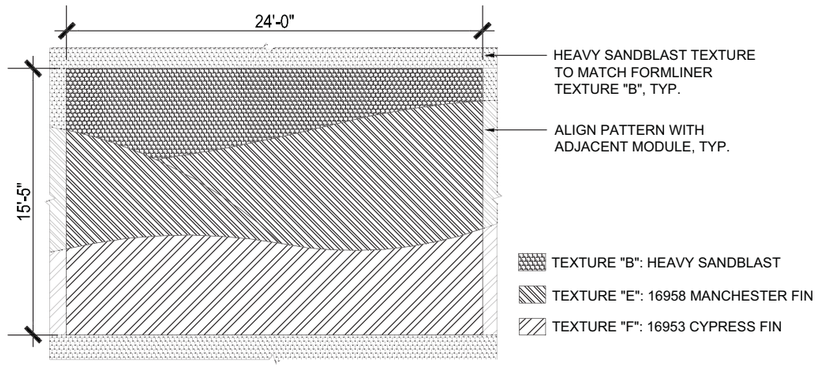


L — MODULE L: ROLLING HILLS - RETAINING WALL FORMLINER PATTERN
1/4" = 1'-0"

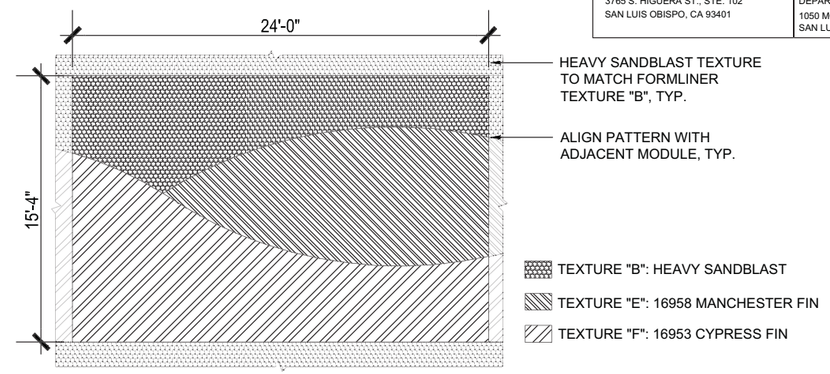


J — MODULE J: ROLLING HILLS - RETAINING WALL FORMLINER PATTERN
1/4" = 1'-0"

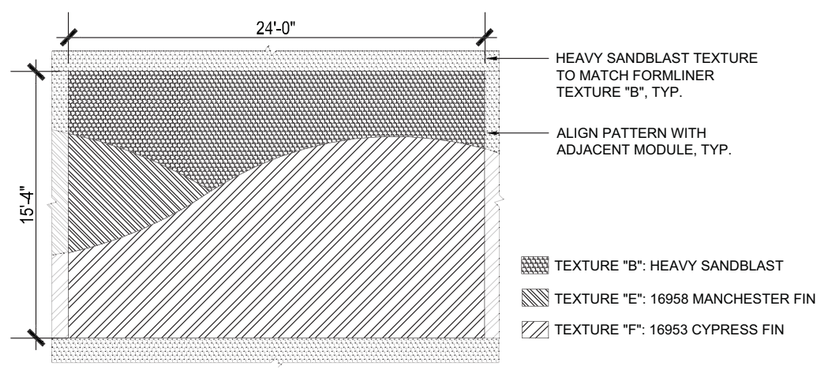


K — MODULE K: ROLLING HILLS - RETAINING WALL FORMLINER PATTERN
1/4" = 1'-0"

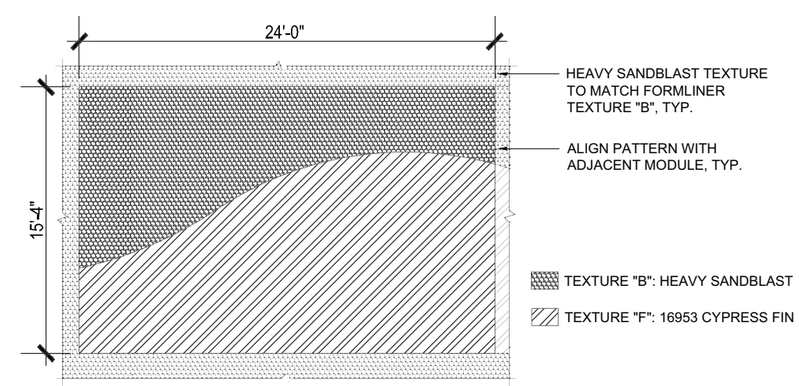


I — MODULE I: ROLLING HILLS - RETAINING WALL FORMLINER PATTERN
1/4" = 1'-0"

THIS PLAN ACCURATE FOR ART WORK ONLY

# DETAILS
# A10

STATE OF CALIFORNIA - DEPARTMENT OF TRANSPORTATION
Caltrans
ART DETAILS

CONSULTANT FUNCTIONAL SUPERVISOR: RRM DESIGN GROUP

CALCULATED-DESIGNED BY: LWIERSCHEM
CHECKED BY: LMCKAY
REVISED BY
DATE REVISED

DATE PLOTTED => $DATE
TIME PLOTTED => $TIME
LAST REVISION 05-05-10

| Dist | COUNTY | ROUTE | POST MILES TOTAL PROJECT | SHEET No. | TOTAL SHEETS |
|---|---|---|---|---|---|
| 05 | SLO | 101 | 5.9/6.9 | 260 | 290 |

REGISTERED LANDSCAPE ARCHITECT — DATE 05-05-10

PLANS APPROVAL DATE

LICENSED LANDSCAPE ARCHITECT — W. ANTONY KEITH NO. 3873 — Signature — 10/31/10 Renewal Date — Date — STATE OF CALIFORNIA

*THE STATE OF CALIFORNIA OR ITS OFFICERS OR AGENTS SHALL NOT BE RESPONSIBLE FOR THE ACCURACY OR COMPLETENESS OF SCANNED COPIES OF THIS PLAN SHEET.*

RRM DESIGN GROUP
3765 S. HIGUERA ST., STE. 102
SAN LUIS OBISPO, CA 93401

COUNTY OF SAN LUIS OBISPO
DEPARTMENT OF PUBLIC WORKS
1050 MONTEREY STREET
SAN LUIS OBISPO, CA 93408

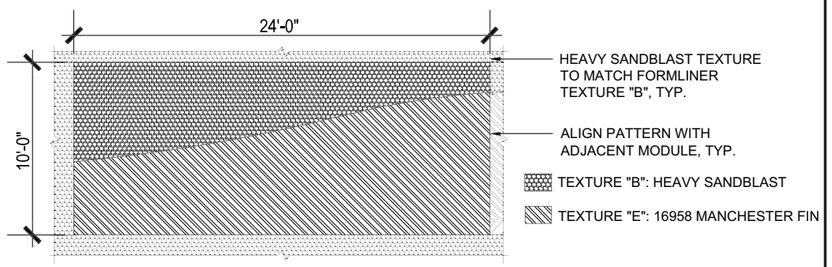


(P) MODULE P: ROLLING HILLS - RETAINING WALL FROMLINER PATTERN — 1/4" = 1'-0"

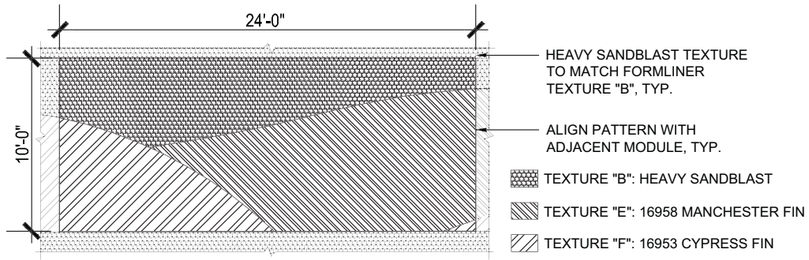


(N) MODULE N: ROLLING HILLS - RETAINING WALL FROMLINER PATTERN — 1/4" = 1'-0"




(Q) RETAINING WALL FORMLINER, TYPICAL SECTIOIN — 1/2" = 1'-0"

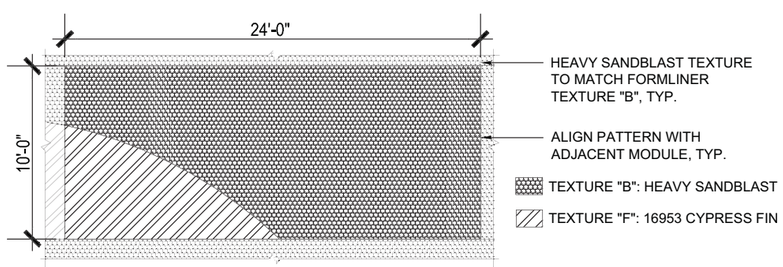


(O) MODULE O: ROLLING HILLS - RETAINING WALL FORMLINER PATTERN — 1/4" = 1'-0"

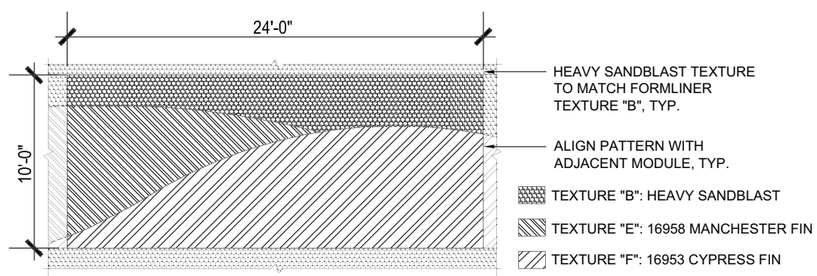


(M) MODULE M: ROLLING HILLS - RETAINING WALL FORMLINER PATTERN — 1/4" = 1'-0"

THIS PLAN ACCURATE FOR ART WORK ONLY

# DETAILS
# A11

STATE OF CALIFORNIA - DEPARTMENT OF TRANSPORTATION
ART DETAILS
CONSULTANT FUNCTIONAL SUPERVISOR: RRM DESIGN GROUP
CALCULATED-DESIGNED BY: LWIERSCHEM
CHECKED BY: LMCKAY
REVISED BY
DATE REVISED

LAST REVISION 05-05-10
DATE PLOTTED => $DATE
TIME PLOTTED => $TIME

BORDER LAST REVISED 4/11/2008
RELATIVE BORDER SCALE IS IN INCHES 0 1 2 3
USERNAME => $USER
DGN FILE => $REQUEST
CU
EA 05-474503

| Dist | COUNTY | ROUTE | POST MILES TOTAL PROJECT | SHEET No. | TOTAL SHEETS |
|---|---|---|---|---|---|
| 05 | SLO | 101 | 5.9/6.9 | 261 | 290 |

REGISTERED LANDSCAPE ARCHITECT — DATE 07-16-10

PLANS APPROVAL DATE

LICENSED LANDSCAPE ARCHITECT — M. ANTHONY KEITH NO. 3873 — Signature — Expiration Date 10/31/10 — Date — STATE OF CALIFORNIA

*THE STATE OF CALIFORNIA OR ITS OFFICERS OR AGENTS SHALL NOT BE RESPONSIBLE FOR THE ACCURACY OR COMPLETENESS OF SCANNED COPIES OF THIS PLAN SHEET.*

RRM DESIGN GROUP
3765 S. HIGUERA ST., STE. 102
SAN LUIS OBISPO, CA 93401

COUNTY OF SAN LUIS OBISPO
DEPARTMENT OF PUBLIC WORKS
1050 MONTEREY STREET
SAN LUIS OBISPO, CA 93408

## ABBREVIATIONS

AC - ACRE
B&B - BALLED AND BURLAPPED
CY - CUBIC YARD
DIA - DIAMETER
EA - EACH
FT - FOOT
FT² - SQUARE FOOT
FT³ - CUBIC FOOT
G - GRAM
IN - INCH
LB - POUND
MAX - MAXIMUM
MIN - MINIMUM
NO. - NUMBER
PVMT - PAVEMENT
PLT ESTB - PLANT ESTABLISHMENT
REQ - REQUIRED
R/W - RIGHT OF WAY
SF - STATE FURNISHED
TAB - TABLETS
TRVD - TRAVELED

# PLANT LIST AND PLANTING SPECIFICATIONS

| PLANT GROUP | PLANT NUMBER | SYMBOL | BOTANICAL NAME | COMMON NAME | SIZE | QUANTITY EACH | HOLE SIZE DIA. | HOLE SIZE DEPTH | BASIN TYPE | IRON SULFATE | SOIL AMEND ① | COMMERCIAL FERTILIZER ① PLANTING | COMMERCIAL FERTILIZER ① PLT ESTB | MULCH | STAKING | PLANTING LIMITS MINIMUM DISTANCE (FT) FROM TRVD WAY | PVMT | FENCE | WALL | PAVED DITCH | EARTH DITCH | ON CENTER (FT) | REMARKS |
|---|---|---|---|---|---|---|---|---|---|---|---|---|---|---|---|---|---|---|---|---|---|---|---|
| A | 1 | ◉ | ARCTOSTAPHYLOS RUDIS | SAND MESA MANZANITA | No. 1 | 65 | ② | ② | II | - | ⑦ | ⑦ | ⑦ | 2 FT³ | - | - | 6 | 6 | 6 | 6 | 6 | 10 | MEDIUM SHRUB |
| | 2 | ⊙ | PRUNUS FASCICULATA VAR. PUNCTATA | SAND ALMOND | No. 1 | 87 | | | | - | | | | 2 FT³ | - | - | 6 | 6 | 6 | 6 | 6 | 10 | MEDIUM SHRUB |
| | 3 | ⊖ | RHAMNUS CALIFORNICA | COFFEEBERRY | No. 1 | 32 | | | | - | | | | 2 FT³ | - | - | 15 | 15 | 10 | 10 | 12 | - | MEDIUM SHRUB |
| B | 4 | ✳ | HETEROMELES ARBUTIFOLIA | TOYON | No. 5 | 24 | | | | - | | | | 2 FT³ | - | - | 15 | 15 | 10 | 10 | 12 | - | LARGE SHRUB |
| | 5 | | QUERCUS AGRIFOLIA | COAST LIVE OAK | No. 5 | 167 | | | | - | | | | 4 FT³ | ⑥ | 30 | - | 20 | 15 | 15 | 17 | 20 | STANDARD TREE ⑪ ⑫ |
| | 6 | ■ | SAMBUCUS CAERULEA | BLUE ELDERBERRY | No. 5 | 12 | | | | - | | | | 2 FT³ | - | - | 15 | 15 | 15 | 15 | 17 | - | LARGE SHRUB |

### APPLICABLE WHEN CIRCLED:

① - Quantities shown are "per plant" unless shown as CY application rates.
② - Sufficient to recieve root ball
3 - Does not apply to mulch areas.
④ - As shown on plans
5 - Unless otherwise shown on plans
⑥ - Required
⑦ - See special provisions
8 - See standard specifications
9 - See detail
10 - Twice the diameter of rootball
⑪ - Root protector required
⑫ - Foliage protector required

### NOTE:

Underlined portions of botanical name indicate abbreviations used on Planting Plans

SEED TYPE 1:
EROSION CONTROL HYDROSEED

SEED TYPE 2:
MARITIME CHAPARRAL ENHANCEMENTS

SEED TYPE 3:
BIOFILTRATION STRIPS

CALIFORNIA SPINEFLOWER

PLANT LIST

PL-1

REVISED BY — DATE REVISED
MPELTIER — LMCKAY
CALCULATED-DESIGNED BY — CHECKED BY
CONSULTANT FUNCTIONAL SUPERVISOR — RRM DESIGN GROUP
STATE OF CALIFORNIA - DEPARTMENT OF TRANSPORTATION — LANDSCAPE ARCHITECTURE

DATE PLOTTED => $DATE
TIME PLOTTED => $TIME
LAST REVISION 07-16-10

| Dist | COUNTY | ROUTE | POST MILES TOTAL PROJECT | SHEET No. | TOTAL SHEETS |
|---|---|---|---|---|---|
| 05 | SLO | 101 | 5.9/6.9 | 262 | 290 |

REGISTERED LANDSCAPE ARCHITECT — DATE 07-16-10

PLANS APPROVAL DATE

LICENSED LANDSCAPE ARCHITECT — M. ANTHONY KEITH NO. 3873 — Signature — 10/31/10 Renewal Date — Date — STATE OF CALIFORNIA

*THE STATE OF CALIFORNIA OR ITS OFFICERS OR AGENTS SHALL NOT BE RESPONSIBLE FOR THE ACCURACY OR COMPLETENESS OF SCANNED COPIES OF THIS PLAN SHEET.*

RRM DESIGN GROUP
3765 S. HIGUERA ST., STE. 102
SAN LUIS OBISPO, CA 93401

COUNTY OF SAN LUIS OBISPO
DEPARTMENT OF PUBLIC WORKS
1050 MONTEREY STREET
SAN LUIS OBISPO, CA 93408

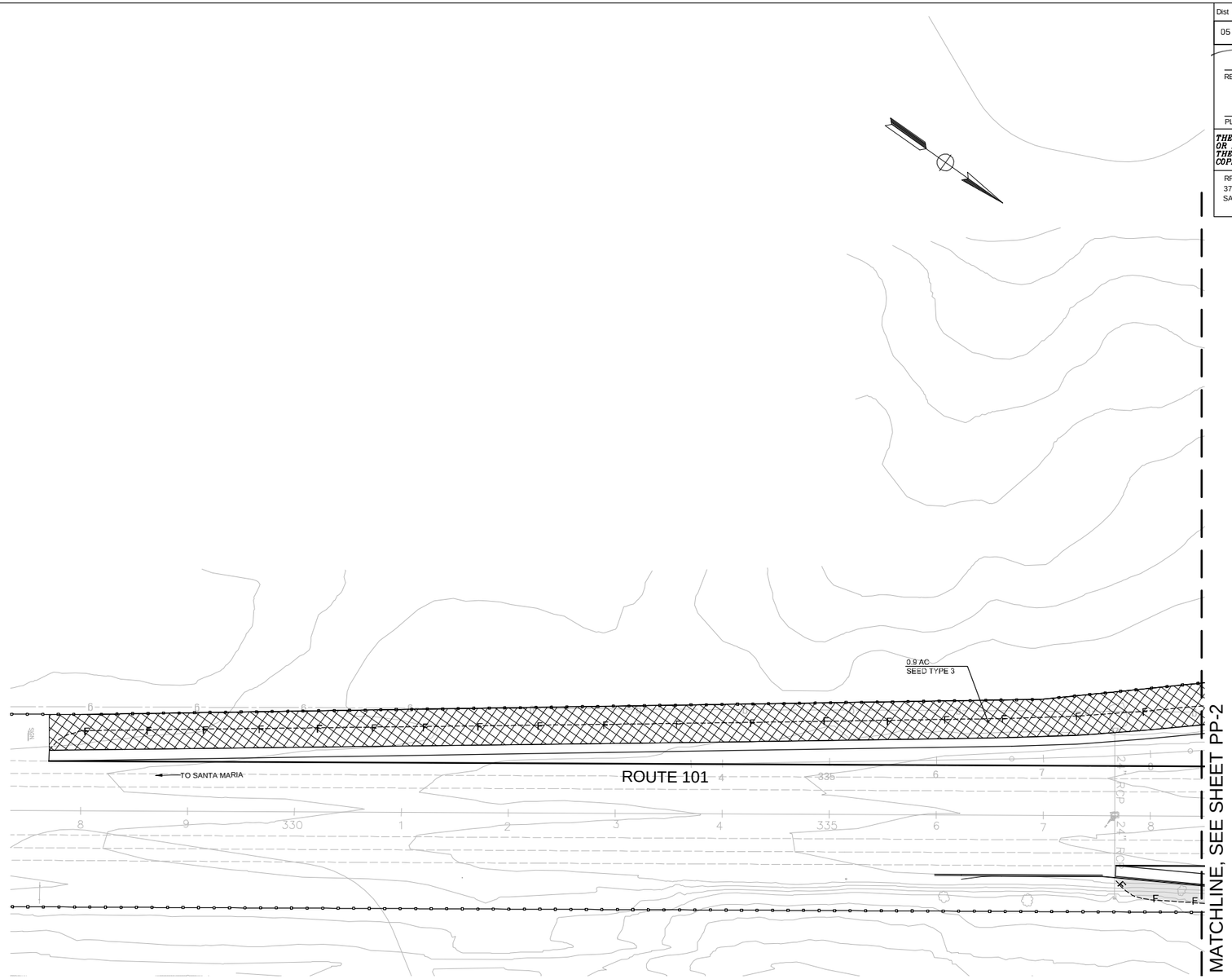


DIGALERT
DIAL TOLL FREE
1-800-227-2600
AT LEAST TWO DAYS BEFORE YOU DIG
UNDERGROUND SERVICE ALERT (USA) OF NORTHERN CALIFORNIA

NOTE:

1. INSTALL COMPOST BLANKET ON DISTURBED AREAS PRIOR TO HYDROSEEDING.
2. SEE EROSION CONTROL PLANS FOR MORE INFORMATION IN THIS AREA.

THIS PLAN ACCURATE FOR PLANTING WORK ONLY.

# PLANTING PLAN

SCALE 1"=50'

PP-1

STATE OF CALIFORNIA - DEPARTMENT OF TRANSPORTATION
LANDSCAPE ARCHITECTURE

CONSULTANT FUNCTIONAL SUPERVISOR: RRM DESIGN GROUP

CALCULATED-DESIGNED BY: MPELTIER
CHECKED BY: LMCKAY

REVISED BY
DATE REVISED

LAST REVISION 07-16-10
DATE PLOTTED => $DATE
TIME PLOTTED => $TIME

BORDER LAST REVISED 4/11/2008

RELATIVE BORDER SCALE IS IN INCHES 0 1 2 3

USERNAME => $USER
DGN FILE => $REQUEST

CU

EA 05-474503

| Dist | COUNTY | ROUTE | POST MILES TOTAL PROJECT | SHEET No. | TOTAL SHEETS |
|---|---|---|---|---|---|
| 05 | SLO | 101 | 5.9/6.9 | 263 | 290 |

REGISTERED LANDSCAPE ARCHITECT — DATE 07-16-10

PLANS APPROVAL DATE

LICENSED LANDSCAPE ARCHITECT — M. ANTHONY KEITH NO. 3873 — Signature — 10/31/10 Renewal Date — Date — STATE OF CALIFORNIA

*THE STATE OF CALIFORNIA OR ITS OFFICERS OR AGENTS SHALL NOT BE RESPONSIBLE FOR THE ACCURACY OR COMPLETENESS OF SCANNED COPIES OF THIS PLAN SHEET.*

RRM DESIGN GROUP
3765 S. HIGUERA ST., STE. 102
SAN LUIS OBISPO, CA 93401

COUNTY OF SAN LUIS OBISPO
DEPARTMENT OF PUBLIC WORKS
1050 MONTEREY STREET
SAN LUIS OBISPO, CA 93408

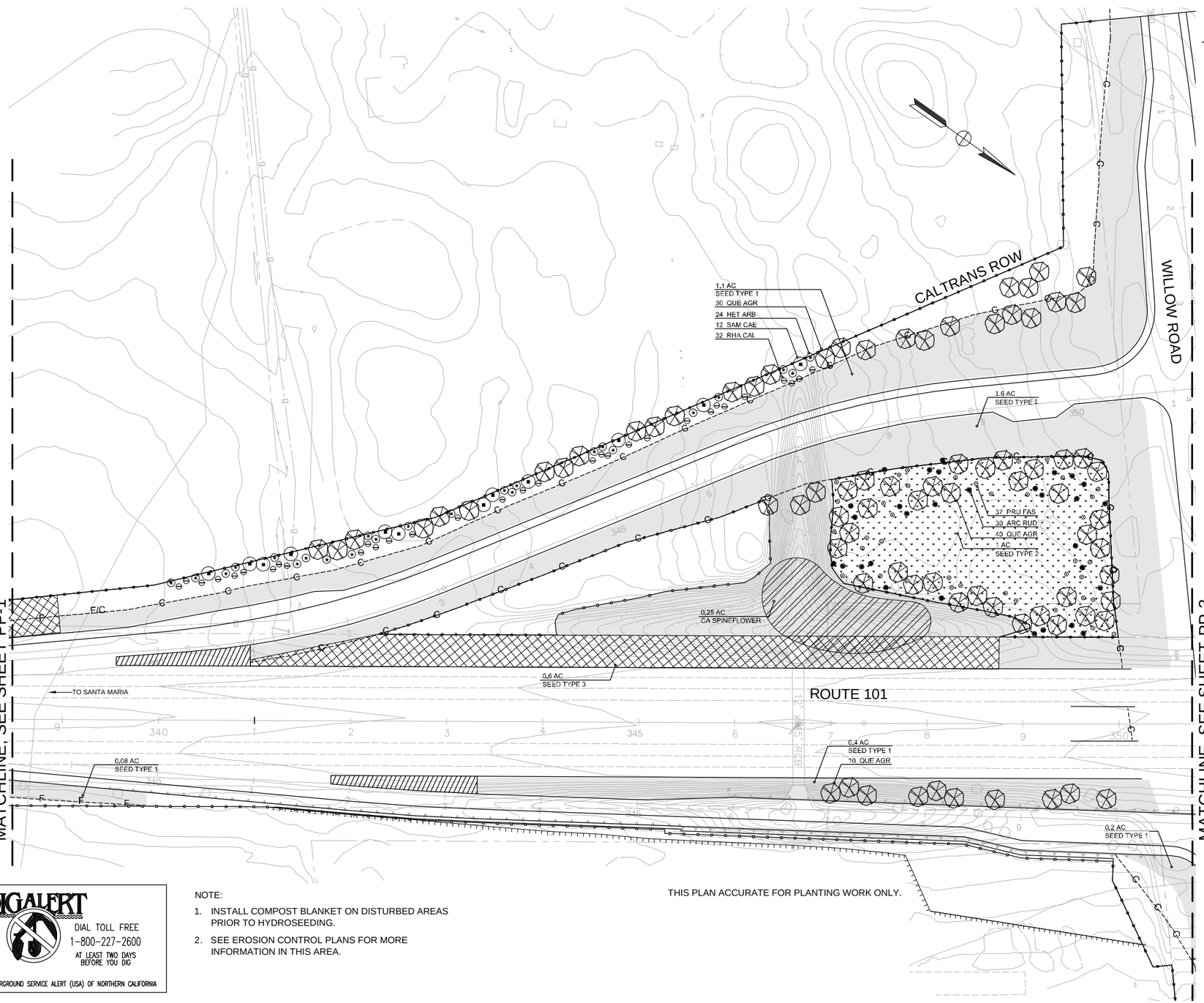


DIGALERT
DIAL TOLL FREE
1-800-227-2600
AT LEAST TWO DAYS BEFORE YOU DIG
UNDERGROUND SERVICE ALERT (USA) OF NORTHERN CALIFORNIA

NOTE:

1. INSTALL COMPOST BLANKET ON DISTURBED AREAS PRIOR TO HYDROSEEDING.
2. SEE EROSION CONTROL PLANS FOR MORE INFORMATION IN THIS AREA.

THIS PLAN ACCURATE FOR PLANTING WORK ONLY.

# PLANTING PLAN

SCALE 1"=50'

PP-2

STATE OF CALIFORNIA - DEPARTMENT OF TRANSPORTATION
Caltrans
LANDSCAPE ARCHITECTURE

CONSULTANT FUNCTIONAL SUPERVISOR: RRM DESIGN GROUP

CALCULATED-DESIGNED BY: MPELTIER
CHECKED BY: LMCKAY

REVISED BY
DATE REVISED

LAST REVISION 07-16-10
DATE PLOTTED => $DATE
TIME PLOTTED => $TIME

BORDER LAST REVISED 4/11/2008

RELATIVE BORDER SCALE IS IN INCHES 0 1 2 3

USERNAME => $USER
DGN FILE => $REQUEST

CU

EA 05-474503

| Dist | COUNTY | ROUTE | POST MILES TOTAL PROJECT | SHEET No. | TOTAL SHEETS |
|---|---|---|---|---|---|
| 05 | SLO | 101 | 5.9/6.9 | 264 | 290 |

REGISTERED LANDSCAPE ARCHITECT — DATE 07-16-10

PLANS APPROVAL DATE

LICENSED LANDSCAPE ARCHITECT — M. ANTHONY KEITH NO. 3873 — Signature — Renewal Date 10/31/10 — Date — STATE OF CALIFORNIA

*THE STATE OF CALIFORNIA OR ITS OFFICERS OR AGENTS SHALL NOT BE RESPONSIBLE FOR THE ACCURACY OR COMPLETENESS OF SCANNED COPIES OF THIS PLAN SHEET.*

RRM DESIGN GROUP
3765 S. HIGUERA ST., STE. 102
SAN LUIS OBISPO, CA 93401

COUNTY OF SAN LUIS OBISPO
DEPARTMENT OF PUBLIC WORKS
1050 MONTEREY STREET
SAN LUIS OBISPO, CA 93408

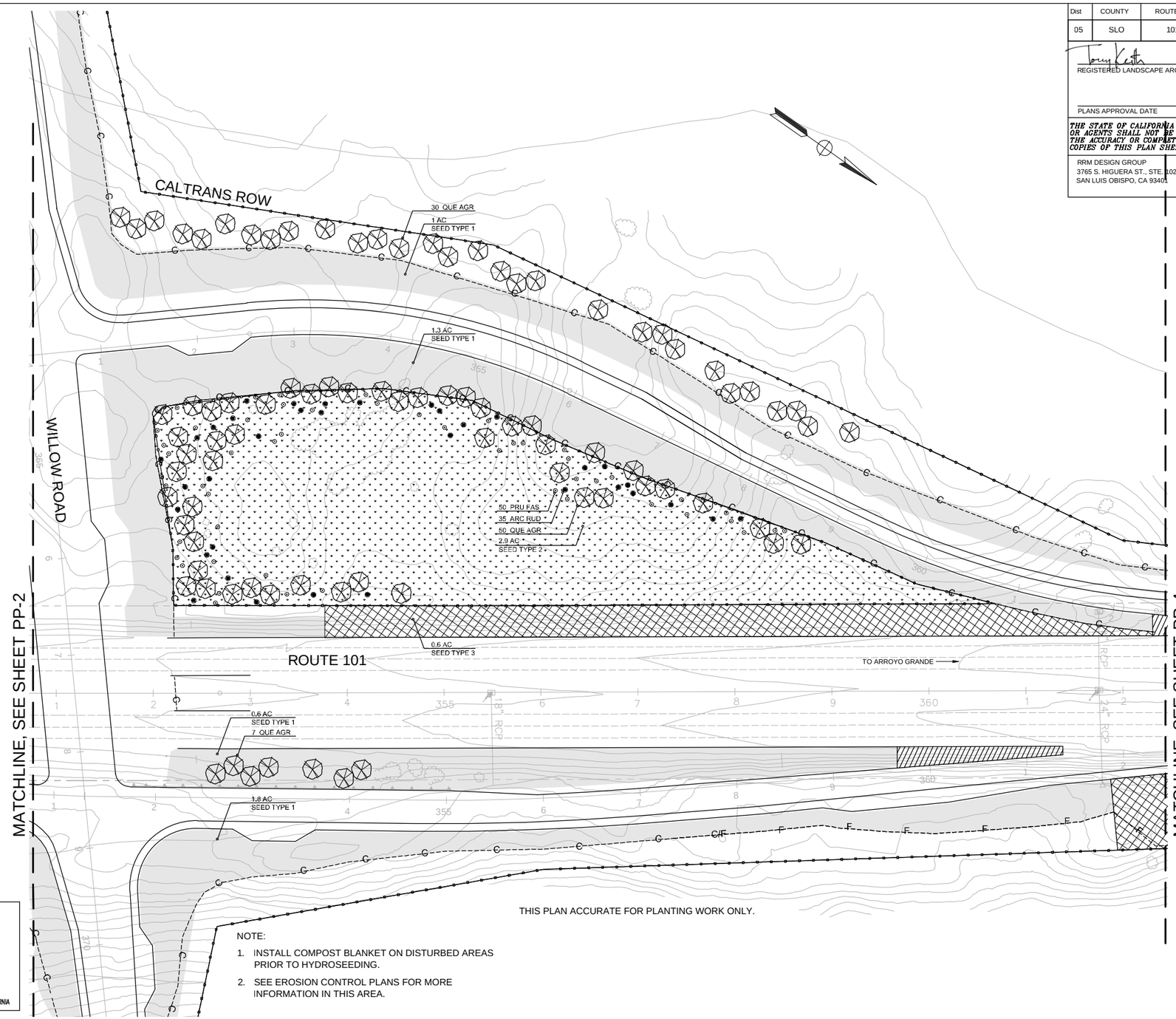


THIS PLAN ACCURATE FOR PLANTING WORK ONLY.

NOTE:

1. INSTALL COMPOST BLANKET ON DISTURBED AREAS PRIOR TO HYDROSEEDING.
2. SEE EROSION CONTROL PLANS FOR MORE INFORMATION IN THIS AREA.

DIGALERT
DIAL TOLL FREE
1-800-227-2600
AT LEAST TWO DAYS BEFORE YOU DIG
UNDERGROUND SERVICE ALERT (USA) OF NORTHERN CALIFORNIA

# PLANTING PLAN

SCALE 1"=50'

PP-3

STATE OF CALIFORNIA - DEPARTMENT OF TRANSPORTATION
Caltrans
LANDSCAPE ARCHITECTURE

CONSULTANT FUNCTIONAL SUPERVISOR: RRM DESIGN GROUP
CALCULATED-DESIGNED BY: MPELTIER
CHECKED BY: LMCKAY
REVISED BY
DATE REVISED

DATE PLOTTED => $DATE
TIME PLOTTED => $TIME
LAST REVISION 07-16-10

BORDER LAST REVISED 4/11/2008
RELATIVE BORDER SCALE IS IN INCHES 0 1 2 3
USERNAME => $USER
DGN FILE => $REQUEST
CU
EA 05-474503

| Dist | COUNTY | ROUTE | POST MILES TOTAL PROJECT | SHEET No. | TOTAL SHEETS |
|---|---|---|---|---|---|
| 05 | SLO | 101 | 5.9/6.9 | 265 | 290 |

REGISTERED LANDSCAPE ARCHITECT — DATE 07-16-10

PLANS APPROVAL DATE

LICENSED LANDSCAPE ARCHITECT — M. ANTHONY KEITH NO. 3873 — Signature — 10/31/10 Renewal Date — Date — STATE OF CALIFORNIA

*THE STATE OF CALIFORNIA OR ITS OFFICERS OR AGENTS SHALL NOT BE RESPONSIBLE FOR THE ACCURACY OR COMPLETENESS OF SCANNED COPIES OF THIS PLAN SHEET.*

RRM DESIGN GROUP
3765 S. HIGUERA ST., STE. 102
SAN LUIS OBISPO, CA 93401

COUNTY OF SAN LUIS OBISPO
DEPARTMENT OF PUBLIC WORKS
1050 MONTEREY STREET
SAN LUIS OBISPO, CA 93408

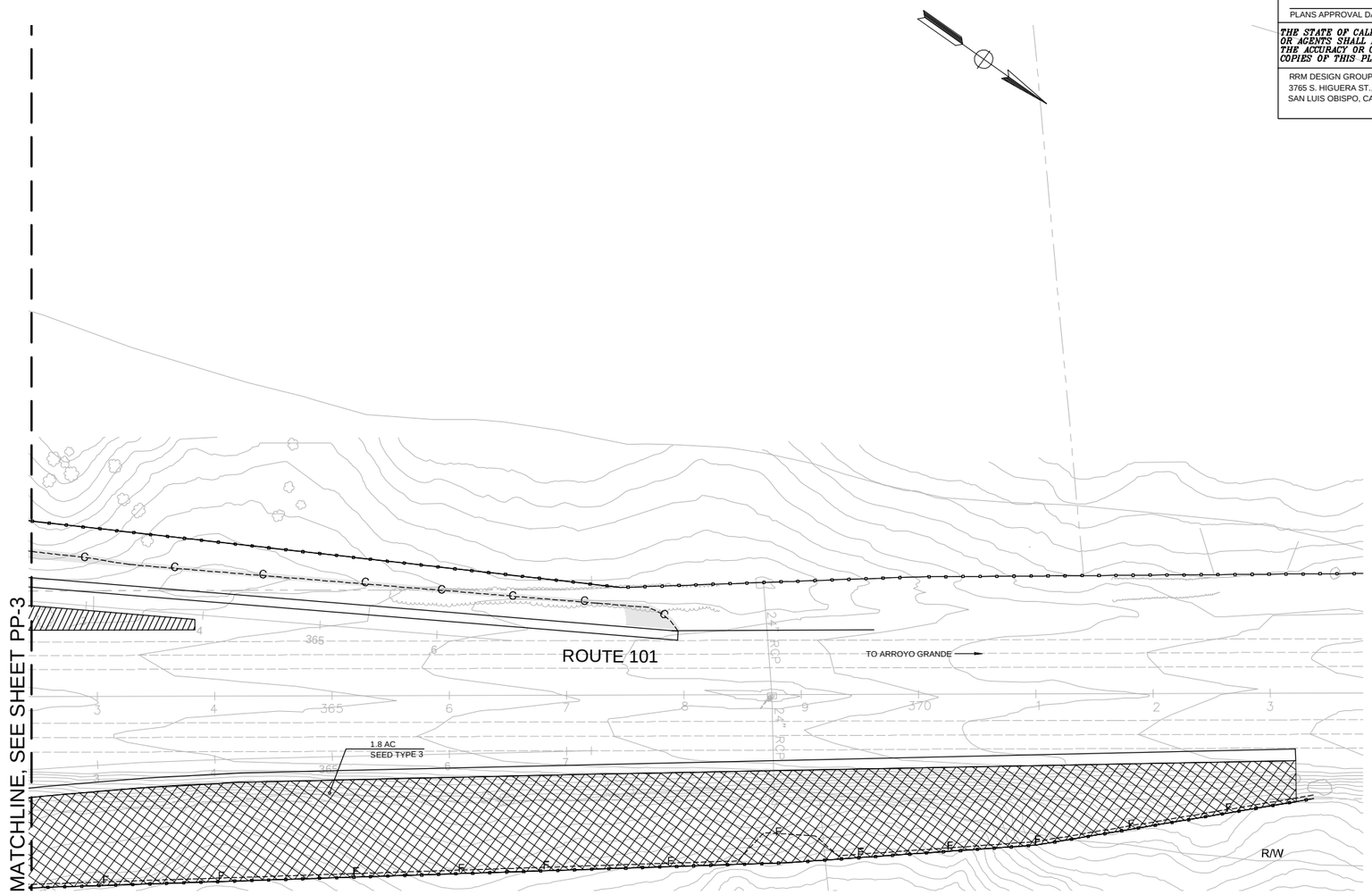


NOTE:

1. INSTALL COMPOST BLANKET ON DISTURBED AREAS PRIOR TO HYDROSEEDING.
2. SEE EROSION CONTROL PLANS FOR MORE INFORMATION IN THIS AREA.

THIS PLAN ACCURATE FOR PLANTING WORK ONLY.

DIGALERT
DIAL TOLL FREE
1-800-227-2600
AT LEAST TWO DAYS BEFORE YOU DIG
UNDERGROUND SERVICE ALERT (USA) OF NORTHERN CALIFORNIA

# PLANTING PLAN

SCALE 1"=50'

PP-4

STATE OF CALIFORNIA - DEPARTMENT OF TRANSPORTATION
LANDSCAPE ARCHITECTURE

CONSULTANT FUNCTIONAL SUPERVISOR
RRM DESIGN GROUP

CALCULATED-DESIGNED BY: MPELTIER
CHECKED BY: LMCKAY
REVISED BY
DATE REVISED

LAST REVISION 07-16-10
DATE PLOTTED => $DATE
TIME PLOTTED => $TIME

BORDER LAST REVISED 4/11/2008

RELATIVE BORDER SCALE IS IN INCHES 0 1 2 3

USERNAME => $USER
DGN FILE => $REQUEST

CU

EA 05-474503

| Dist | COUNTY | ROUTE | POST MILES TOTAL PROJECT | SHEET No. | TOTAL SHEETS |
|---|---|---|---|---|---|
| 05 | SLO | 101 | 5.9/6.9 | 266 | 290 |

REGISTERED LANDSCAPE ARCHITECT — DATE 07-16-10

PLANS APPROVAL DATE

LICENSED LANDSCAPE ARCHITECT — M. ANTHONY KEITH No. 3873 — Signature — Renewal Date 10/31/10 — Date — STATE OF CALIFORNIA

*THE STATE OF CALIFORNIA OR ITS OFFICERS OR AGENTS SHALL NOT BE RESPONSIBLE FOR THE ACCURACY OR COMPLETENESS OF SCANNED COPIES OF THIS PLAN SHEET.*

RRM DESIGN GROUP
3765 S. HIGUERA ST., STE. 102
SAN LUIS OBISPO, CA 93401

COUNTY OF SAN LUIS OBISPO
DEPARTMENT OF PUBLIC WORKS
1050 MONTEREY STREET
SAN LUIS OBISPO, CA 93408

## APPLICABLE WHEN CIRCLED BELOW:

1 - See Special Provisions.
2 - If a pressure compensating device is specified, the discharge and radii shown reflect its use.
3 - Arc Stop shall be fitted with a nut and bolt.
4 - Vinyl-coated cast iron housing.
5 - Swing Joints required adjacent to shoulders, curbs, sidewalks, and dikes.
6 - Unless otherwise shown on plans.
7 - Length as required to reach 2" above finish grade

## ABBREVIATIONS

ADJ — adjustable
B/B — brass/bronze
B/B/PL – brass/bronze/plastic
B/PL — brass/plastic
BPAE — backflow preventor & enclosure
BV — ball valve
CST — center strip
DN — diameter nominal
EST — end strip
F — full circle
FT — feet
F/P — full/part circle
G/H — gallons per hour
G/M — gallons per minute
G/S — gallons per second
GV — gate valve
H — half circle
IN — inches
IPS — iron pipe size
NPT — national pipe thread
P — part circle
PL — plastic
Q — quarter circle
QC — quick coupler
RCV — remote control valve
MRCV – master remote control valve
SST — side strip
T — third circle
TQ — three quarter circle
TT — two thirds circle
WM — water meter

## IRRIGATION NOTES

1. IRRIGATION PLAN IS DIAGRAMMATIC. FINAL LOCATION OF PIPING WILL BE DETERMINED AT THE TIME OF INSTALLATION. MAINLINE AND LATERALS SHALL BE PLACED IN THE SAME TRENCH WHEN POSSIBLE. ALL VALVES ARE TO BE LOCATED 12" FROM SIDEWALKS, CURBS, ASPHALT & CONCRETE SURFACES.
2. ALL EQUIPMENT REQUIRED BUT NOT SPECIFIED ON THE DRAWING, TO COMPLETE THE WORK, SHALL BE PROVIDED BY THE IRRIGATION CONTRACTOR.
3. INSTALL ALL EQUIPMENT IN ACCORDANCE WITH MANUFACTURER'S INSTRUCTIONS AND/OR SPECIFICATIONS.
4. CONTRACTOR SHALL FAMILIARIZE HIMSELF WITH THE PLANS AND SITE CONDITIONS PRIOR TO BEGINNING WORK. SHOULD CONFLICTING INFORMATION BE FOUND ON THE PLANS, THE CONTRACTOR SHALL NOTIFY THE PROJECT LANDSCAPE ARCHITECT BEFORE PROCEEDING WITH THE WORK IN QUESTION.
5. DO NOT WILLFULLY INSTALL THE IRRIGATION SYSTEM AS SHOWN ON THE DRAWINGS WHEN IT IS OBVIOUS IN THE FIELD THAT OBSTRUCTIONS, GRADE DIFFERENCES OR DIFFERENCES IN THE AREA DIMENSIONS EXIST THAT MIGHT NOT HAVE BEEN CONSIDERED IN THE ENGINEERING. SUCH OBSTRUCTIONS OR DIFFERENCES SHOULD BE BROUGHT TO THE ATTENTION OF THE LANDSCAPE ARCHITECT. IN THE EVENT THIS NOTIFICATION IS NOT PERFORMED, THE CONTRACTOR SHALL ASSUME FULL RESPONSIBILITY FOR ANY REVISIONS NECESSARY AT NO EXPENSE TO THE COUNTY.
6. CONTRACTOR SHALL BE RESPONSIBLE FOR THE INSTALLATION OF ALL MATERIAL APPEARING ON PLAN.
7. ALL EXISTING UTILITIES, WATER LINES AND FIRE HYDRANTS SHALL REMAIN CONNECTED AND IN FULL CONTINUOUS OPERATION DURING AND FOLLOWING ALL CONTRACT WORK.

## IRRIGATION EQUIPMENT SCHEDULE

| SYMBOL | MANUFACTURER | MODEL | DESCRIPTION | REMARKS |
|---|---|---|---|---|
| ◉ | ANDREWS | 150-A-BR/150-DC-BR | CAM COUPLER ASSEMBLY<br>1 1/2" MALE ADAPTER X FEMALE NPT (BRASS)<br>WITH 1 1/2" DUST CAP (BRASS) | SEE CALTRANS STD. DETAIL |
| | KBI | BTU SERIES | TRUE UNION BALL VALVE | SEE CALTRANS STD. DETAIL |
| | CHRISTY | B24 | CONCRETE VALVE BOX WITH STEEL LID | SEE CALTRANS STD. DETAIL |
| ⋈ | WILKINS | 500 SERIES | PRESSURE REGULATING VALVE | SEE CALTRANS STD. DETAIL |
| ⊟ | AS APPROVED | | FILTER ASSEMBLY UNIT | SEE CALTRANS STD. DETAIL |
| ——— | AS APPROVED | SCH. 40 PVC | LATERAL PIPE | SEE CALTRANS STD. DETAIL |
| ~~~ | AS APPROVED | 1/2" | LATERAL DRIP LINE | SEE CALTRANS STD. DETAIL |
| —·—·— | AS APPROVED | GALVANIZED STEEL PIPE | LATERAL PIPE | SEE CALTRANS STD. DETAIL |

## SPRINKLER SCHEDULE

| SYMBOL | TYPE | MANUFACTURER | MODEL | DESCRIPTION | SPRAY PATTERN | OPERATING PRESSURE (PSI) | PRESSURE COMPENSATING | PLUS / MINUS 5% ② DISCHARGE: GALLONS PER SECOND (GPS) | GALLONS PER MINUTE (GPM) | GALLONS PER HOUR (GPH) | RADIUS (FT) | WIDTH x LENGTH (IN FEET)(FT) | MATERIAL | NOZZLE TYPE | NOZZLE SIZE IN INCHES (IN) | INLET CONNECTION (NPT) (IN INCHES)(IN) | ADJ ARC STOP POSITIVE-LOCKING | BACKSPLASH PREVENTER | DIFFUSER PIN | DISTANCE CONTROL FLAP | ADJ DISCHARGE | RISER: TYPE | MATERIAL: PLASTIC | MATERIAL: GALVANIZED | SIZE (IN INCHES)(IN) | HEIGHT (IN INCHES)(IN) | FLOW SHUTOFF DEVICE | SWING JOINT (TYPE) | RISER SUPPORT | SPRINKLER PROTECTOR (TYPE) | REMARKS |
|---|---|---|---|---|---|---|---|---|---|---|---|---|---|---|---|---|---|---|---|---|---|---|---|---|---|---|---|---|---|---|---|
| ● | C-1 | RAINBIRD | FIXED RISER | BUBBLER | - | 30 | X | - | 0.5 | - | - | - | PL | 1402 | - | 0.5 | - | - | - | - | X | V | X | - | 0.5 | - | - | - | - | - | SEE CALTRANS STD. DETAIL |
| | D-1 | RAINBIRD | XERI-BUG | DRIP EMITTER | - | 15-50 | X | - | 0.5 | - | - | - | PL | - | - | - | - | - | - | - | - | - | - | - | - | - | - | - | - | - | 2 EMITTERS PER SHRUB. INSTALL EMITTERS ON UPHILL SIDE OF PLANT WITHIN PLANTING BASIN. |

X IN BOX DENOTES REQUIREMENT

# IRRIGATION LEGEND AND NOTES

IP-1

REVISED BY | DATE REVISED
MPELTIER | LMCKAY
CALCULATED-DESIGNED BY | CHECKED BY
CONSULTANT FUNCTIONAL SUPERVISOR | RRM DESIGN GROUP
STATE OF CALIFORNIA - DEPARTMENT OF TRANSPORTATION | LANDSCAPE ARCHITECTURE

LAST REVISION 07-16-10 | DATE PLOTTED => $DATE | TIME PLOTTED => $TIME

| Dist | COUNTY | ROUTE | POST MILES TOTAL PROJECT | SHEET No. | TOTAL SHEETS |
|---|---|---|---|---|---|
| 05 | SLO | 101 | 5.9/6.9 | 267 | 290 |

REGISTERED LANDSCAPE ARCHITECT — DATE 07-16-10

PLANS APPROVAL DATE

LICENSED LANDSCAPE ARCHITECT — M. ANTHONY KEITH NO. 3873 — Signature — 10/31/10 Renewal Date — Date — STATE OF CALIFORNIA

*THE STATE OF CALIFORNIA OR ITS OFFICERS OR AGENTS SHALL NOT BE RESPONSIBLE FOR THE ACCURACY OR COMPLETENESS OF SCANNED COPIES OF THIS PLAN SHEET.*

RRM DESIGN GROUP
3765 S. HIGUERA ST., STE. 102
SAN LUIS OBISPO, CA 93401

COUNTY OF SAN LUIS OBISPO
DEPARTMENT OF PUBLIC WORKS
1050 MONTEREY STREET
SAN LUIS OBISPO, CA 93408

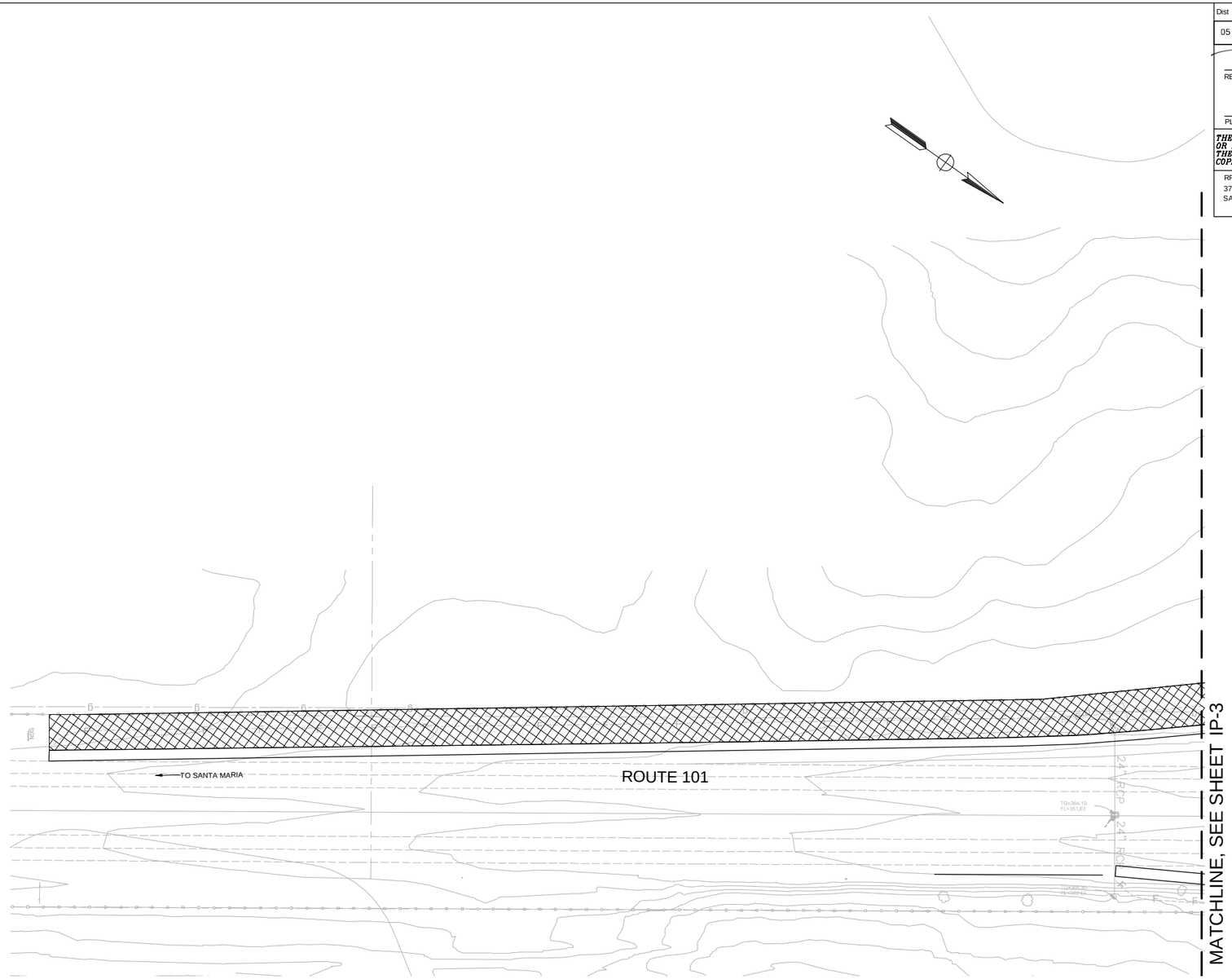


NOTE:

1. ALL IRRIGATION EQUIPMENT SIZES ARE SHOWN IN INCHES (DIAMETER NOMINAL) UNLESS OTHERWISE NOTED.
2. UNLESS OTHERWISE NOTED, ALL LATERAL LINES SHALL BE $\frac{3}{4}$" MINIMUM.

THIS PLAN ACCURATE FOR IRRIGATION WORK ONLY.

DIGALERT
DIAL TOLL FREE
1-800-227-2600
AT LEAST TWO DAYS BEFORE YOU DIG
UNDERGROUND SERVICE ALERT (USA) OF NORTHERN CALIFORNIA

# IRRIGATION PLAN

SCALE 1"=50'

IP-2

STATE OF CALIFORNIA - DEPARTMENT OF TRANSPORTATION
Caltrans®
LANDSCAPE ARCHITECTURE

CONSULTANT FUNCTIONAL SUPERVISOR: RRM DESIGN GROUP

CALCULATED-DESIGNED BY: MPELTIER
CHECKED BY: LMCKAY

REVISED BY
DATE REVISED

LAST REVISION 07-16-10
DATE PLOTTED => $DATE
TIME PLOTTED => $TIME

BORDER LAST REVISED 4/11/2008

RELATIVE BORDER SCALE IS IN INCHES 0 1 2 3

USERNAME => $USER
DGN FILE => $REQUEST

CU

EA 05-474503

| Dist | COUNTY | ROUTE | POST MILES TOTAL PROJECT | SHEET No. | TOTAL SHEETS |
|---|---|---|---|---|---|
| 05 | SLO | 101 | 5.9/6.9 | 268 | 290 |

REGISTERED LANDSCAPE ARCHITECT — DATE 07-16-10

PLANS APPROVAL DATE

LICENSED LANDSCAPE ARCHITECT — M. ANTHONY KEITH NO. 3873 — Signature — Expiration Date 10/31/10 — Date — STATE OF CALIFORNIA

*THE STATE OF CALIFORNIA OR ITS OFFICERS OR AGENTS SHALL NOT BE RESPONSIBLE FOR THE ACCURACY OR COMPLETENESS OF SCANNED COPIES OF THIS PLAN SHEET.*

RRM DESIGN GROUP
3765 S. HIGUERA ST., STE. 102
SAN LUIS OBISPO, CA 93401

COUNTY OF SAN LUIS OBISPO
DEPARTMENT OF PUBLIC WORKS
1050 MONTEREY STREET
SAN LUIS OBISPO, CA 93408

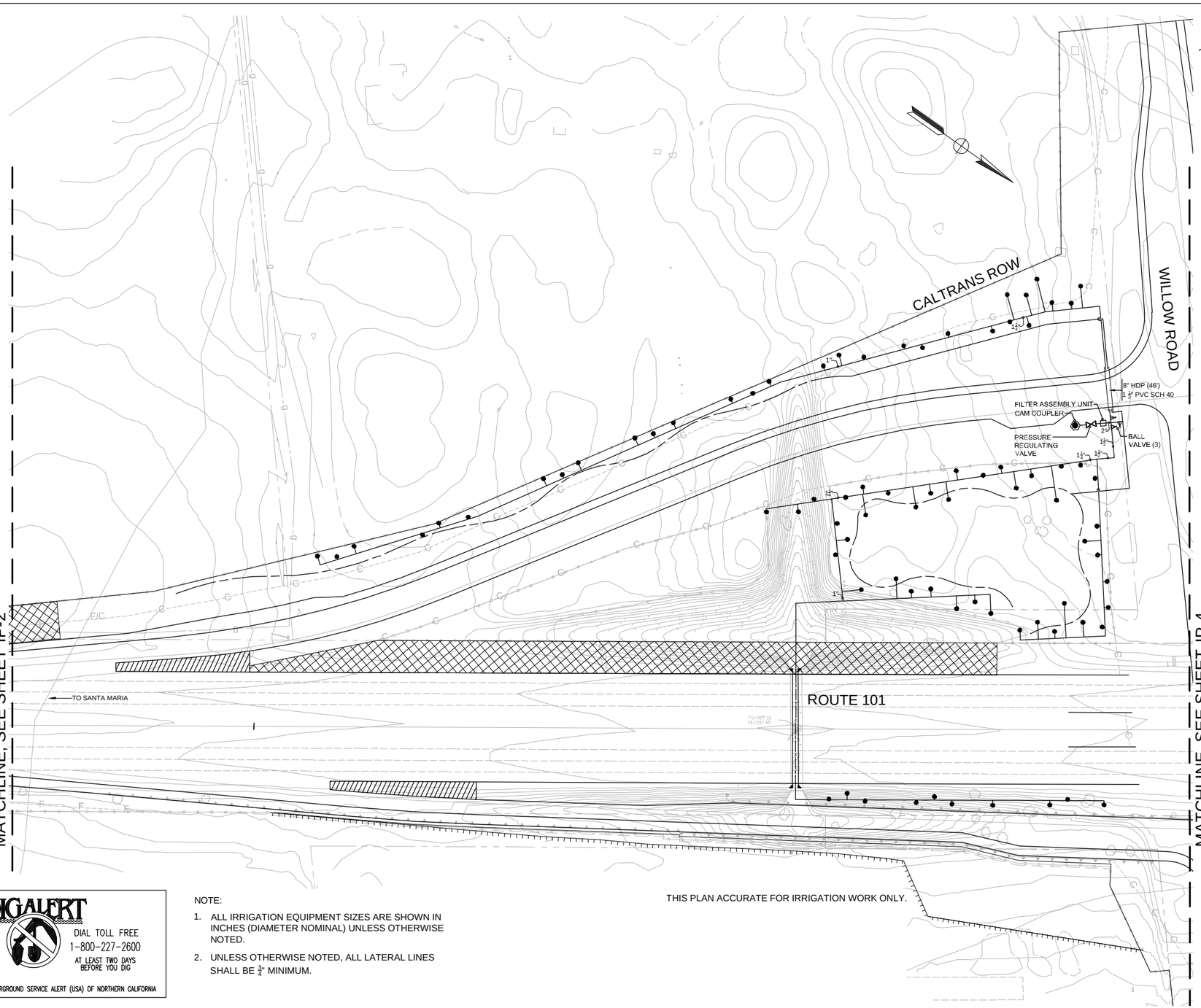


DIGALERT
DIAL TOLL FREE
1-800-227-2600
AT LEAST TWO DAYS BEFORE YOU DIG
UNDERGROUND SERVICE ALERT (USA) OF NORTHERN CALIFORNIA

NOTE:

1. ALL IRRIGATION EQUIPMENT SIZES ARE SHOWN IN INCHES (DIAMETER NOMINAL) UNLESS OTHERWISE NOTED.
2. UNLESS OTHERWISE NOTED, ALL LATERAL LINES SHALL BE ¾" MINIMUM.

THIS PLAN ACCURATE FOR IRRIGATION WORK ONLY.

# IRRIGATION PLAN

SCALE 1"=50'

IP-3

STATE OF CALIFORNIA - DEPARTMENT OF TRANSPORTATION
Caltrans
LANDSCAPE ARCHITECTURE

CONSULTANT FUNCTIONAL SUPERVISOR: RRM DESIGN GROUP

CALCULATED-DESIGNED BY: MPELTIER
CHECKED BY: LMCKAY

REVISED BY
DATE REVISED

DATE PLOTTED => $DATE
TIME PLOTTED => $TIME
LAST REVISION: 07-16-10

BORDER LAST REVISED 4/11/2008

RELATIVE BORDER SCALE IS IN INCHES: 0 1 2 3

USERNAME => $USER
DGN FILE => $REQUEST

CU

EA 05-474503

| Dist | COUNTY | ROUTE | POST MILES TOTAL PROJECT | SHEET No. | TOTAL SHEETS |
|---|---|---|---|---|---|
| 05 | SLO | 101 | 5.9/6.9 | 269 | 290 |

Tony Keith
REGISTERED LANDSCAPE ARCHITECT — 07-16-10 DATE

PLANS APPROVAL DATE

LICENSED LANDSCAPE ARCHITECT — M. ANTHONY KEITH NO. 3873 — Signature — 10/31/10 Renewal Date — Date — STATE OF CALIFORNIA

*THE STATE OF CALIFORNIA OR ITS OFFICERS OR AGENTS SHALL NOT BE RESPONSIBLE FOR THE ACCURACY OR COMPLETENESS OF SCANNED COPIES OF THIS PLAN SHEET.*

RRM DESIGN GROUP
3765 S. HIGUERA ST., STE 102
SAN LUIS OBISPO, CA 93401

COUNTY OF SAN LUIS OBISPO
DEPARTMENT OF PUBLIC WORKS
1050 MONTEREY STREET
SAN LUIS OBISPO, CA 93408

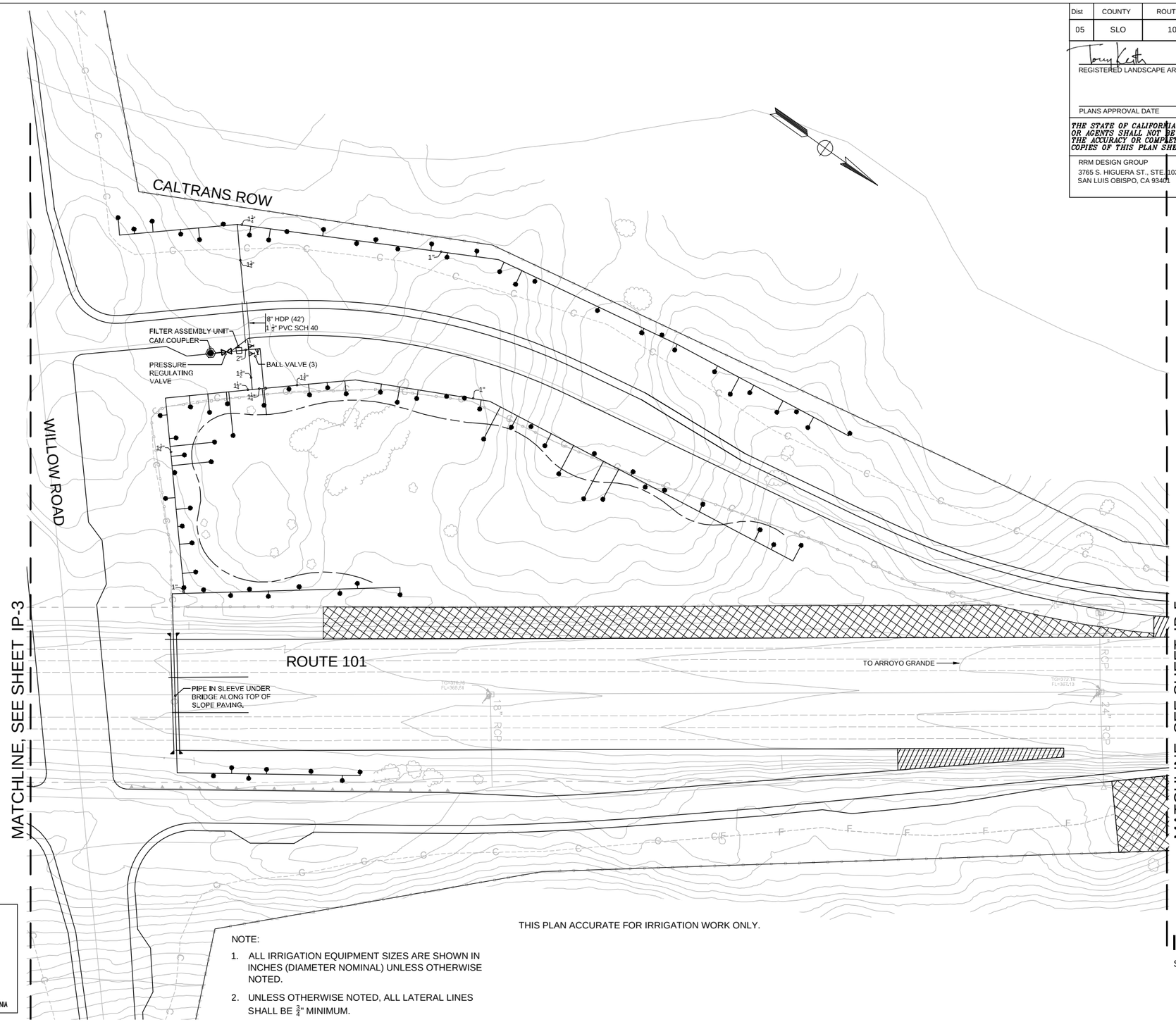


THIS PLAN ACCURATE FOR IRRIGATION WORK ONLY.

NOTE:

1. ALL IRRIGATION EQUIPMENT SIZES ARE SHOWN IN INCHES (DIAMETER NOMINAL) UNLESS OTHERWISE NOTED.
2. UNLESS OTHERWISE NOTED, ALL LATERAL LINES SHALL BE $\frac{3}{4}$" MINIMUM.

DIGALERT
DIAL TOLL FREE
1-800-227-2600
AT LEAST TWO DAYS BEFORE YOU DIG
UNDERGROUND SERVICE ALERT (USA) OF NORTHERN CALIFORNIA

# IRRIGATION PLAN

SCALE 1"=50'

IP-4

| REVISED BY | MPELTIER |
|---|---|
| DATE REVISED | LMCKAY |
| CALCULATED-DESIGNED BY | |
| CHECKED BY | |
| CONSULTANT FUNCTIONAL SUPERVISOR | RRM DESIGN GROUP |

STATE OF CALIFORNIA - DEPARTMENT OF TRANSPORTATION
Caltrans
LANDSCAPE ARCHITECTURE

DATE PLOTTED => $DATE
TIME PLOTTED => $TIME
LAST REVISION 07-16-10

BORDER LAST REVISED 4/11/2008

RELATIVE BORDER SCALE IS IN INCHES 0 1 2 3

USERNAME => $USER
DGN FILE => $REQUEST

CU

EA 05-474503

| Dist | COUNTY | ROUTE | POST MILES TOTAL PROJECT | SHEET No. | TOTAL SHEETS |
|---|---|---|---|---|---|
| 05 | SLO | 101 | 5.9/6.9 | 270 | 290 |

Tony Keith
REGISTERED LANDSCAPE ARCHITECT

07-16-10
DATE

LICENSED LANDSCAPE ARCHITECT
M. ANTHONY KEITH NO. 5873
Expiration
10/31/10
Renewal Date
Date
STATE OF CALIFORNIA

PLANS APPROVAL DATE

*THE STATE OF CALIFORNIA OR ITS OFFICERS OR AGENTS SHALL NOT BE RESPONSIBLE FOR THE ACCURACY OR COMPLETENESS OF SCANNED COPIES OF THIS PLAN SHEET.*

RRM DESIGN GROUP
3765 S. HIGUERA ST., STE. 102
SAN LUIS OBISPO, CA 93401

COUNTY OF SAN LUIS OBISPO
DEPARTMENT OF PUBLIC WORKS
1050 MONTEREY STREET
SAN LUIS OBISPO, CA 93408

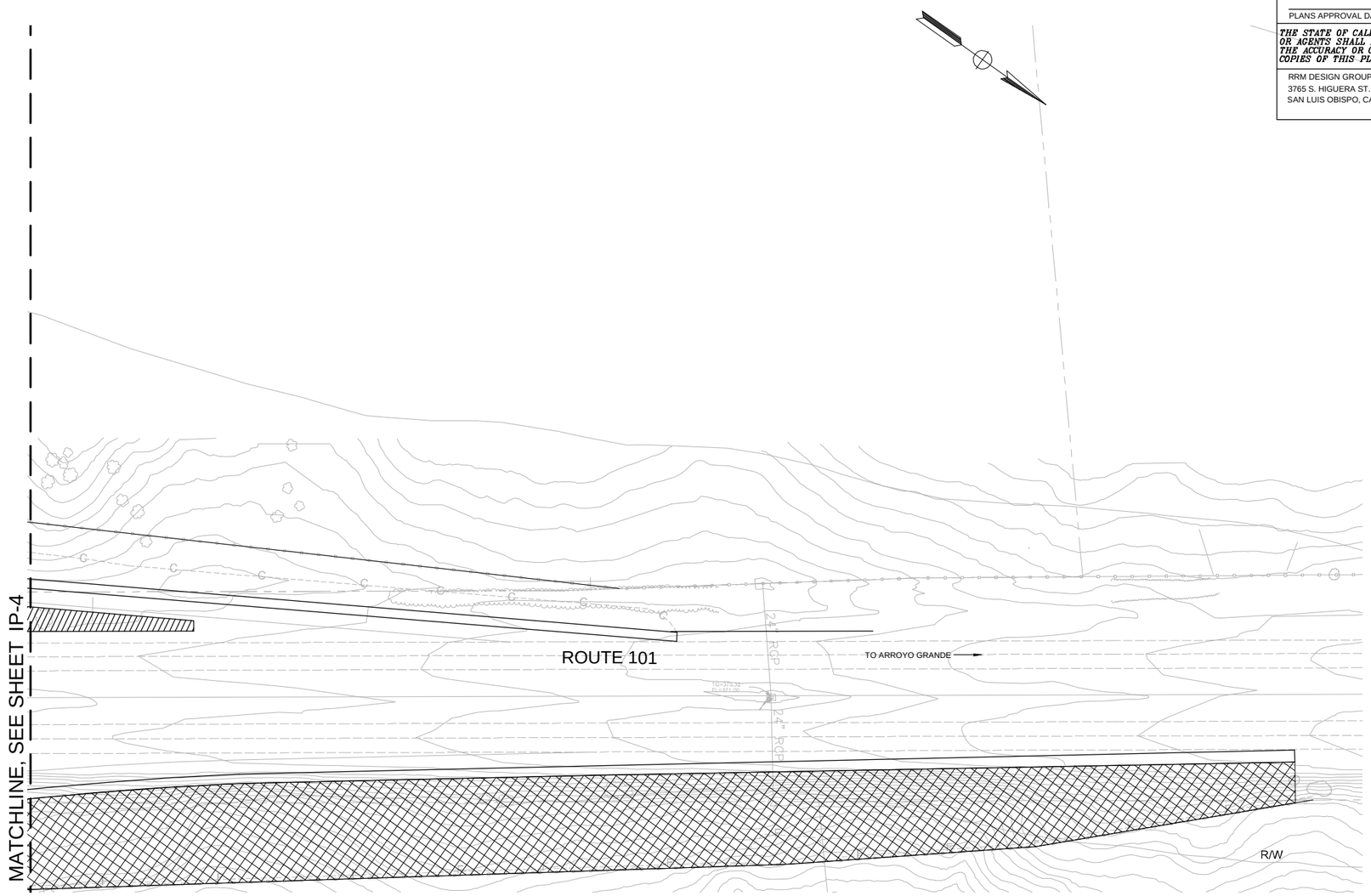


THIS PLAN ACCURATE FOR IRRIGATION WORK ONLY.

DIGALERT
DIAL TOLL FREE
1-800-227-2600
AT LEAST TWO DAYS BEFORE YOU DIG
UNDERGROUND SERVICE ALERT (USA) OF NORTHERN CALIFORNIA

NOTE:

1. ALL IRRIGATION EQUIPMENT SIZES ARE SHOWN IN INCHES (DIAMETER NOMINAL) UNLESS OTHERWISE NOTED.
2. UNLESS OTHERWISE NOTED, ALL LATERAL LINES SHALL BE $\frac{3}{4}$" MINIMUM.

# IRRIGATION PLAN

SCALE 1"=50'

IP-5

STATE OF CALIFORNIA - DEPARTMENT OF TRANSPORTATION
Caltrans
LANDSCAPE ARCHITECTURE

CONSULTANT FUNCTIONAL SUPERVISOR
RRM DESIGN GROUP

CALCULATED-DESIGNED BY
CHECKED BY

MPELTIER
LMCKAY

REVISED BY
DATE REVISED

LAST REVISION 07-16-10
DATE PLOTTED => $DATE
TIME PLOTTED => $TIME

| Dist | COUNTY | ROUTE | POST MILES TOTAL PROJECT | SHEET No. | TOTAL SHEETS |
|---|---|---|---|---|---|
| 05 | SLO | 101 | 5.9/6.9 | 271 | 290 |

REGISTERED CIVIL ENGINEER — 05/05/10 DATE

PLANS APPROVAL DATE

REGISTERED PROFESSIONAL ENGINEER — Bo Gao — No. C59985 — Exp. 6/30/10 — CIVIL — STATE OF CALIFORNIA

*THE STATE OF CALIFORNIA OR ITS OFFICERS OR AGENTS OR COUNTY SHALL NOT BE RESPONSIBLE FOR THE ACCURACY OR COMPLETENESS OF SCANNED COPIES OF THIS PLAN SHEET.*

RAJAPPAN & MEYER
CONSULTING ENGINEERS INC .
1038 LEIGH AVE . SUITE 100
SAN JOSE , CA 95126

COUNTY OF SAN LUIS OBISPO
DEPARTMENT OF PUBLIC WORKS
1050 MONTEREY STREET
SAN LUIS OBISPO, CA 93408

LEGEND:

- (No.) TREE TO BE REMOVE
- [No.] TREE TO BE TRIM
- △No. TREE TO REMAIN

NOTES:

1. FOR ACCURATE RIGHT OF WAY AND ACCESS DATA, CONTACT RIGHT OF WAY ENGINEERING AT THE DISTRICT OFFICE.

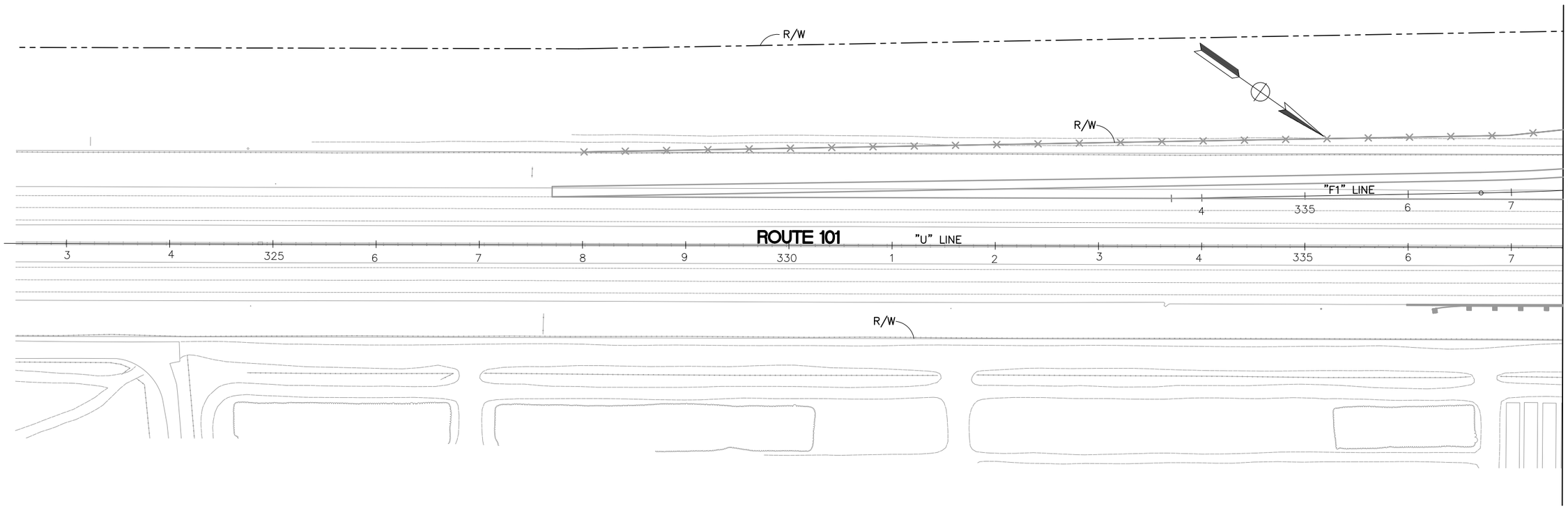


THIS PLAN ACCURATE FOR TREE REMOVAL WORK ONLY.

# TREE REMOVAL PLAN

SCALE 1" = 50'

**TR-1**

| REVISED BY | DATE REVISED |
|---|---|
| T.T., D.L., D.S. | B.G. |
| CALCULATED-DESIGNED BY | CHECKED BY |
| CONSULTANT FUNCTIONAL SUPERVISOR | K.G.M. |

STATE OF CALIFORNIA - DEPARTMENT OF TRANSPORTATION

LAST REVISION 05-05-10 — DATE PLOTTED => $DATE — TIME PLOTTED => $TIME

| Dist | COUNTY | ROUTE | POST MILES TOTAL PROJECT | SHEET No. | TOTAL SHEETS |
|---|---|---|---|---|---|
| 05 | SLO | 101 | 5.9/6.9 | 272 | 290 |

REGISTERED CIVIL ENGINEER — DATE 07/16/10

PLANS APPROVAL DATE

REGISTERED PROFESSIONAL ENGINEER — Bo Gao — No. C59985 — Exp. 6/30/12 — CIVIL — STATE OF CALIFORNIA

*THE STATE OF CALIFORNIA OR ITS OFFICERS OR AGENTS OR COUNTY SHALL NOT BE RESPONSIBLE FOR THE ACCURACY OR COMPLETENESS OF SCANNED COPIES OF THIS PLAN SHEET.*

RAJAPPAN & MEYER
CONSULTING ENGINEERS INC .
1038 LEIGH AVE . SUITE 100
SAN JOSE , CA 95126

COUNTY OF SAN LUIS OBISPO
DEPARTMENT OF PUBLIC WORKS
1050 MONTEREY STREET
SAN LUIS OBISPO, CA 93408

FOR NOTES, ABBREVIATIONS, AND LEGEND, SEE SHEET TR-1.

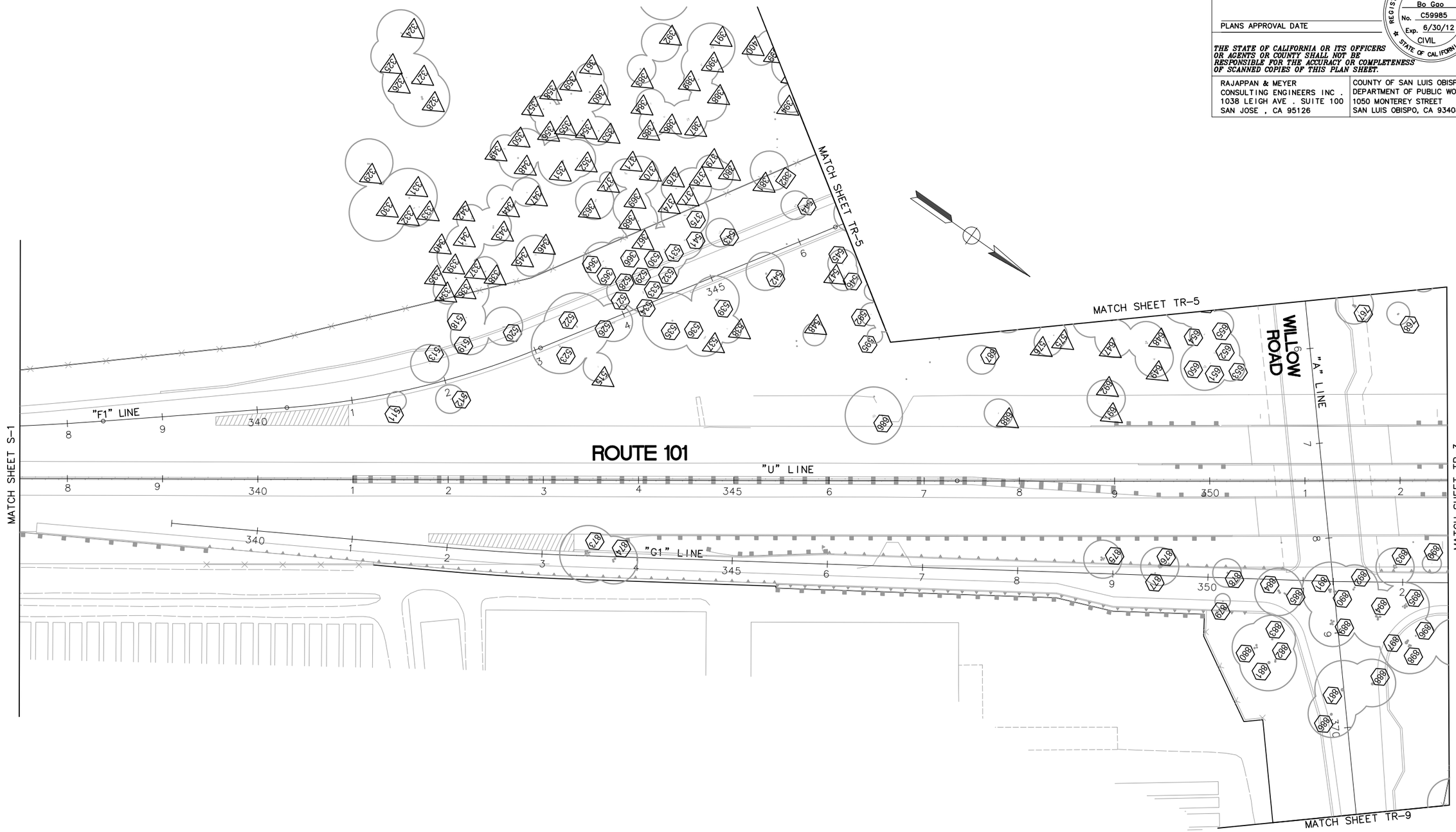


THIS PLAN ACCURATE FOR TREE REMOVAL WORK ONLY.

# TREE REMOVAL PLAN

SCALE 1" = 50'

**TR-2**

| REVISED BY | DATE REVISED |
|---|---|
| | |

T.T., D.L., D.S. — B.G.

CALCULATED-DESIGNED BY — CHECKED BY

CONSULTANT FUNCTIONAL SUPERVISOR — K.G.M.

STATE OF CALIFORNIA – DEPARTMENT OF TRANSPORTATION — Caltrans

LAST REVISION 07-16-10 — DATE PLOTTED => $DATE — TIME PLOTTED => $TIME

BORDER LAST REVISED 4/11/2008 — RELATIVE BORDER SCALE IS IN INCHES 0 1 2 3 — USERNAME =>$USER — DGN FILE => $REQUEST — CU — EA 05-474503

| Dist | COUNTY | ROUTE | POST MILES TOTAL PROJECT | SHEET No. | TOTAL SHEETS |
|---|---|---|---|---|---|
| 05 | SLO | 101 | 5.9/6.9 | 273 | 290 |

REGISTERED CIVIL ENGINEER — 05/05/10 DATE

PLANS APPROVAL DATE

REGISTERED PROFESSIONAL ENGINEER — Bo Gao — No. C59985 — Exp. 6/30/10 — CIVIL — STATE OF CALIFORNIA

*THE STATE OF CALIFORNIA OR ITS OFFICERS OR AGENTS OR COUNTY SHALL NOT BE RESPONSIBLE FOR THE ACCURACY OR COMPLETENESS OF SCANNED COPIES OF THIS PLAN SHEET.*

RAJAPPAN & MEYER
CONSULTING ENGINEERS INC .
1038 LEIGH AVE . SUITE 100
SAN JOSE , CA 95126

COUNTY OF SAN LUIS OBISPO
DEPARTMENT OF PUBLIC WORKS
1050 MONTEREY STREET
SAN LUIS OBISPO, CA 93408

FOR NOTES, ABBREVIATIONS, AND LEGEND, SEE SHEET TR-1.

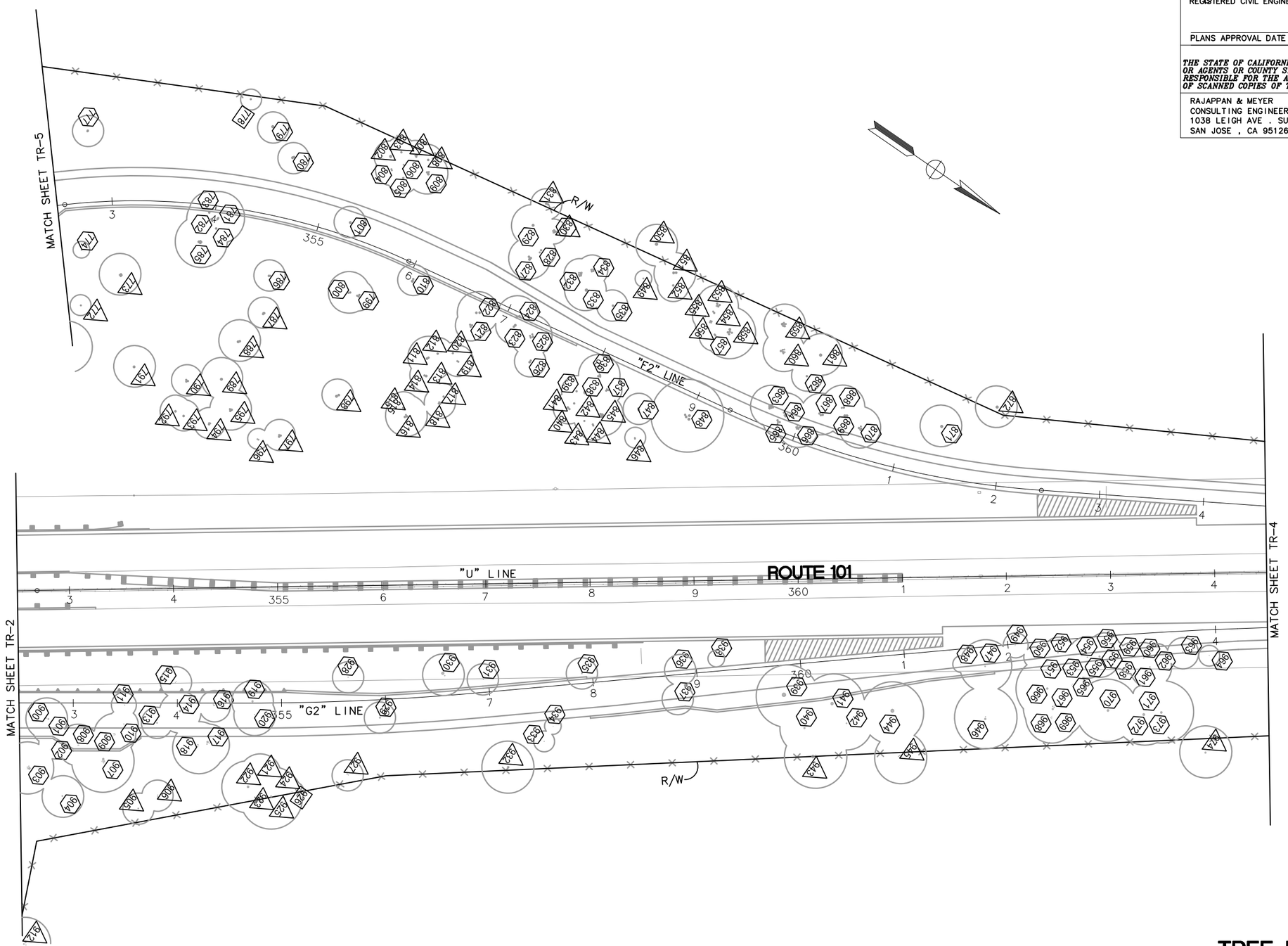


THIS PLAN ACCURATE FOR TREE REMOVAL WORK ONLY.

# TREE REMOVAL PLAN

SCALE 1" = 50'

**TR-3**

| REVISED BY | DATE REVISED |
|---|---|
| | |

T.T., D.L., D.S. — B.G.

CALCULATED-DESIGNED BY — CHECKED BY

CONSULTANT FUNCTIONAL SUPERVISOR — K.G.M.

STATE OF CALIFORNIA - DEPARTMENT OF TRANSPORTATION — Caltrans

LAST REVISION 05-05-10 — DATE PLOTTED => $DATE — TIME PLOTTED => $TIME

BORDER LAST REVISED 4/11/2008 — RELATIVE BORDER SCALE IS IN INCHES 0 1 2 3 — USERNAME =>$USER — DGN FILE => $REQUEST — CU — EA 05-474503

| Dist | COUNTY | ROUTE | POST MILES TOTAL PROJECT | SHEET No. | TOTAL SHEETS |
|---|---|---|---|---|---|
| 05 | SLO | 101 | 5.9/6.9 | 274 | 290 |

REGISTERED CIVIL ENGINEER — DATE 05/05/10

PLANS APPROVAL DATE

REGISTERED PROFESSIONAL ENGINEER — Bo Gao — No. C59985 — Exp. 6/30/10 — CIVIL — STATE OF CALIFORNIA

*THE STATE OF CALIFORNIA OR ITS OFFICERS OR AGENTS OR COUNTY SHALL NOT BE RESPONSIBLE FOR THE ACCURACY OR COMPLETENESS OF SCANNED COPIES OF THIS PLAN SHEET.*

RAJAPPAN & MEYER
CONSULTING ENGINEERS INC .
1038 LEIGH AVE . SUITE 100
SAN JOSE , CA 95126

COUNTY OF SAN LUIS OBISPO
DEPARTMENT OF PUBLIC WORKS
1050 MONTEREY STREET
SAN LUIS OBISPO, CA 93408

FOR NOTES, ABBREVIATIONS, AND LEGEND, SEE SHEET TR-1.

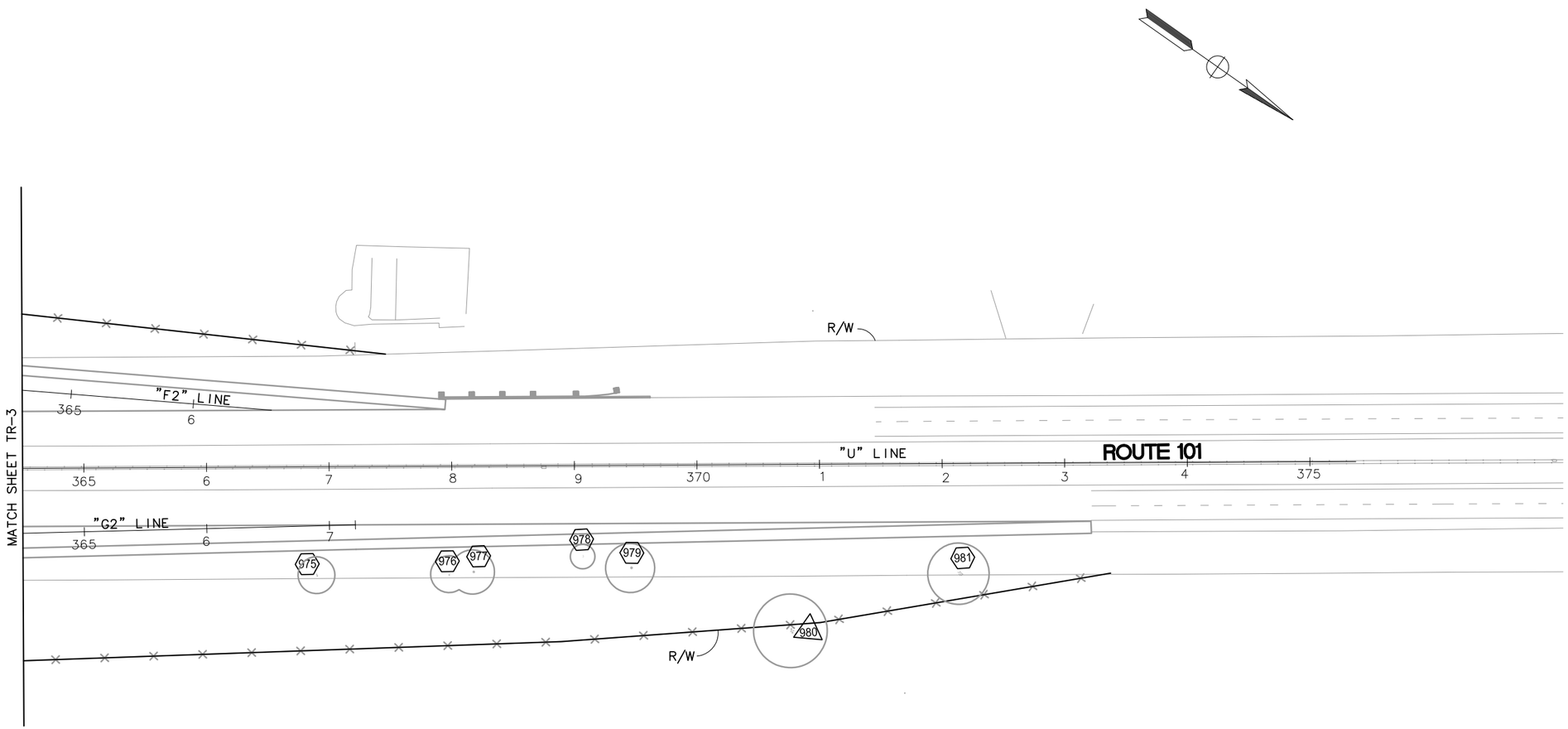


THIS PLAN ACCURATE FOR TREE REMOVAL WORK ONLY.

# TREE REMOVAL PLAN

SCALE 1" = 50'

**TR-4**

| REVISED BY | DATE REVISED |
|---|---|
| | |

T.T., D.L., D.S. — CALCULATED-DESIGNED BY
B.G. — CHECKED BY
K.G.M. — CONSULTANT FUNCTIONAL SUPERVISOR

STATE OF CALIFORNIA – DEPARTMENT OF TRANSPORTATION
Caltrans

LAST REVISION 05-05-10 — DATE PLOTTED => $DATE — TIME PLOTTED => $TIME

| Dist | COUNTY | ROUTE | POST MILES TOTAL PROJECT | SHEET No. | TOTAL SHEETS |
|---|---|---|---|---|---|
| 05 | SLO | 101 | 5.9/6.9 | 275 | 290 |

REGISTERED CIVIL ENGINEER — DATE 07/16/10

PLANS APPROVAL DATE

REGISTERED PROFESSIONAL ENGINEER — Bo Gao — No. C59985 — Exp. 6/30/12 — CIVIL — STATE OF CALIFORNIA

*THE STATE OF CALIFORNIA OR ITS OFFICERS OR AGENTS OR COUNTY SHALL NOT BE RESPONSIBLE FOR THE ACCURACY OR COMPLETENESS OF SCANNED COPIES OF THIS PLAN SHEET.*

RAJAPPAN & MEYER
CONSULTING ENGINEERS INC .
1038 LEIGH AVE . SUITE 100
SAN JOSE , CA 95126

COUNTY OF SAN LUIS OBISPO
DEPARTMENT OF PUBLIC WORKS
1050 MONTEREY STREET
SAN LUIS OBISPO, CA 93408

FOR NOTES, ABBREVIATIONS, AND LEGEND, SEE SHEET TR-1.

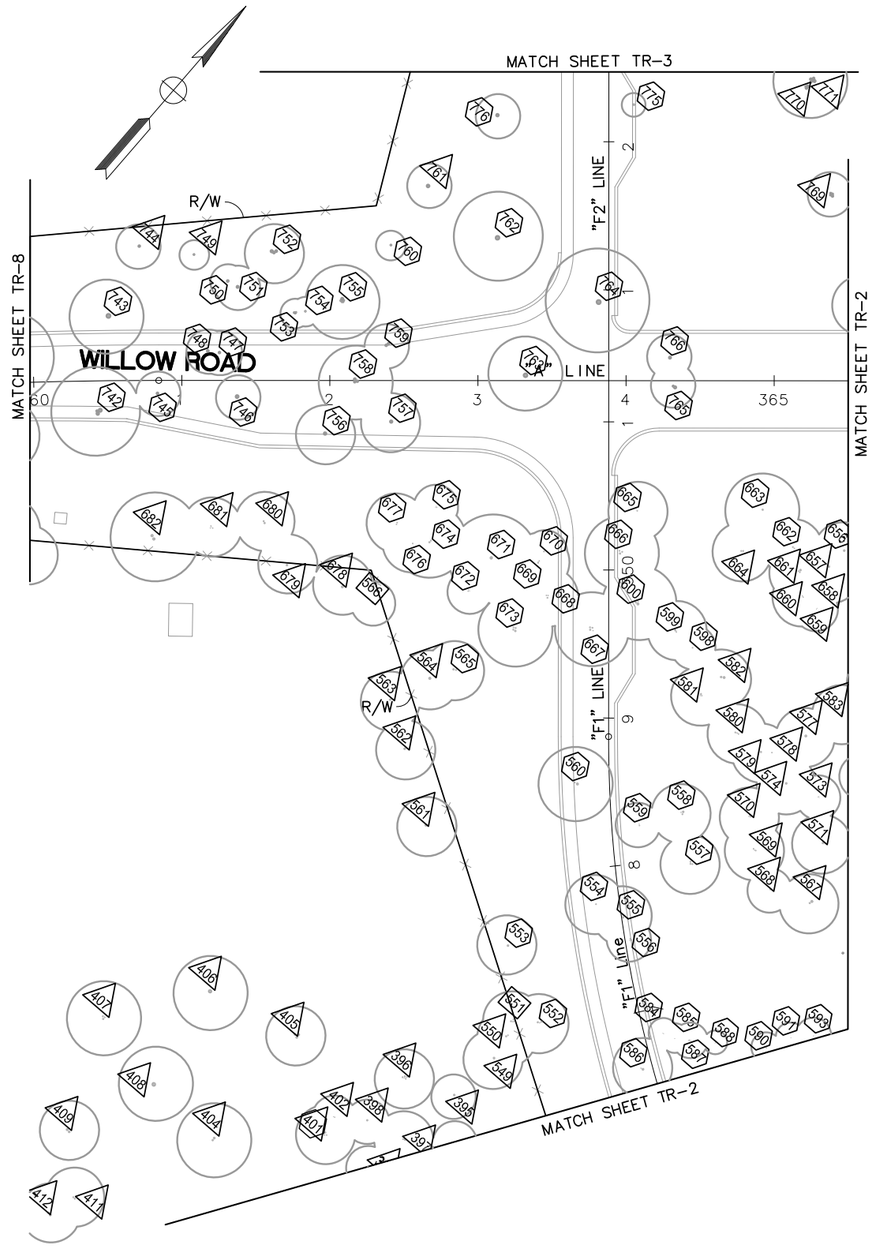


THIS PLAN ACCURATE FOR TREE REMOVAL WORK ONLY.

# TREE REMOVAL PLAN

SCALE 1" = 50'

**TR-5**

| REVISED BY | DATE REVISED |
|---|---|
| | |

| T.T., D.L., D.S. | B.G. |
|---|---|
| CALCULATED-DESIGNED BY | CHECKED BY |

CONSULTANT FUNCTIONAL SUPERVISOR: K.G.M.

STATE OF CALIFORNIA – DEPARTMENT OF TRANSPORTATION — Caltrans

LAST REVISION 07-16-10 — DATE PLOTTED => $DATE — TIME PLOTTED => $TIME

BORDER LAST REVISED 4/11/2008 — RELATIVE BORDER SCALE IS IN INCHES 0 1 2 3 — USERNAME =>$USER — DGN FILE => $REQUEST — CU — EA 05-474503

| Dist | COUNTY | ROUTE | POST MILES TOTAL PROJECT | SHEET No. | TOTAL SHEETS |
|---|---|---|---|---|---|
| 05 | SLO | 101 | 5.9/6.9 | 276 | 290 |

REGISTERED CIVIL ENGINEER — DATE 05/05/10

PLANS APPROVAL DATE

REGISTERED PROFESSIONAL ENGINEER — Bo Gao — No. C59985 — Exp. 6/30/10 — CIVIL — STATE OF CALIFORNIA

*THE STATE OF CALIFORNIA OR ITS OFFICERS OR AGENTS OR COUNTY SHALL NOT BE RESPONSIBLE FOR THE ACCURACY OR COMPLETENESS OF SCANNED COPIES OF THIS PLAN SHEET.*

RAJAPPAN & MEYER
CONSULTING ENGINEERS INC .
1038 LEIGH AVE . SUITE 100
SAN JOSE , CA 95126

COUNTY OF SAN LUIS OBISPO
DEPARTMENT OF PUBLIC WORKS
1050 MONTEREY STREET
SAN LUIS OBISPO, CA 93408

FOR NOTES, ABBREVIATIONS, AND LEGEND, SEE SHEET TR-1.

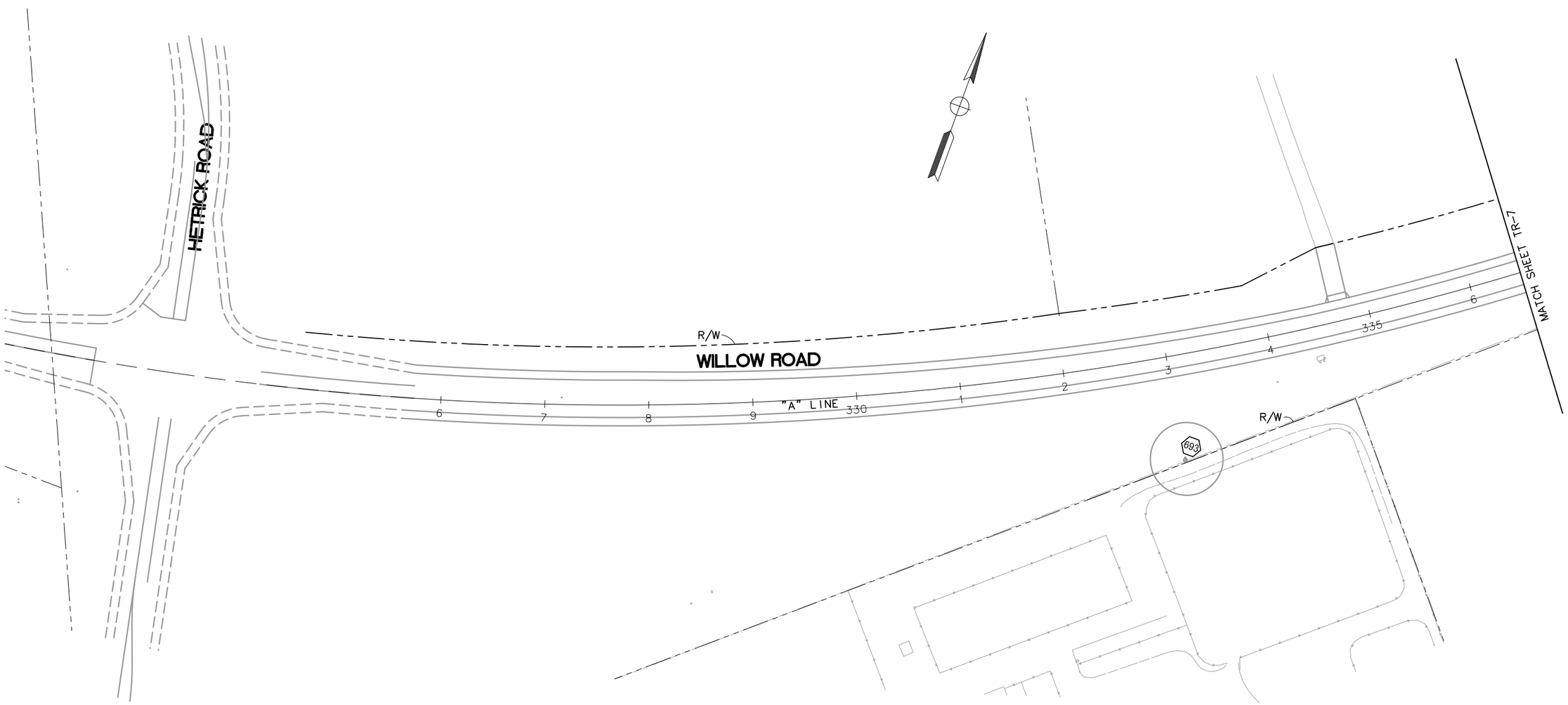


THIS PLAN ACCURATE FOR TREE REMOVAL WORK ONLY.

# TREE REMOVAL PLAN

SCALE 1" = 50'

**TR-6**

| REVISED BY | T.T., D.L., D.S. | CALCULATED-DESIGNED BY |
|---|---|---|
| DATE REVISED | B.G. | CHECKED BY |

CONSULTANT FUNCTIONAL SUPERVISOR: K.G.M.

STATE OF CALIFORNIA – DEPARTMENT OF TRANSPORTATION — Caltrans

LAST REVISION 05-05-10 — DATE PLOTTED => $DATE — TIME PLOTTED => $TIME

| Dist | COUNTY | ROUTE | POST MILES TOTAL PROJECT | SHEET No. | TOTAL SHEETS |
|---|---|---|---|---|---|
| 05 | SLO | 101 | 5.9/6.9 | 277 | 290 |

REGISTERED CIVIL ENGINEER — DATE 05/05/10

PLANS APPROVAL DATE

REGISTERED PROFESSIONAL ENGINEER — Bo Gao — No. C59985 — Exp. 6/30/10 — CIVIL — STATE OF CALIFORNIA

*THE STATE OF CALIFORNIA OR ITS OFFICERS OR AGENTS OR COUNTY SHALL NOT BE RESPONSIBLE FOR THE ACCURACY OR COMPLETENESS OF SCANNED COPIES OF THIS PLAN SHEET.*

RAJAPPAN & MEYER
CONSULTING ENGINEERS INC .
1038 LEIGH AVE . SUITE 100
SAN JOSE , CA 95126

COUNTY OF SAN LUIS OBISPO
DEPARTMENT OF PUBLIC WORKS
1050 MONTEREY STREET
SAN LUIS OBISPO, CA 93408

FOR NOTES, ABBREVIATIONS, AND LEGEND, SEE SHEET TR-1.

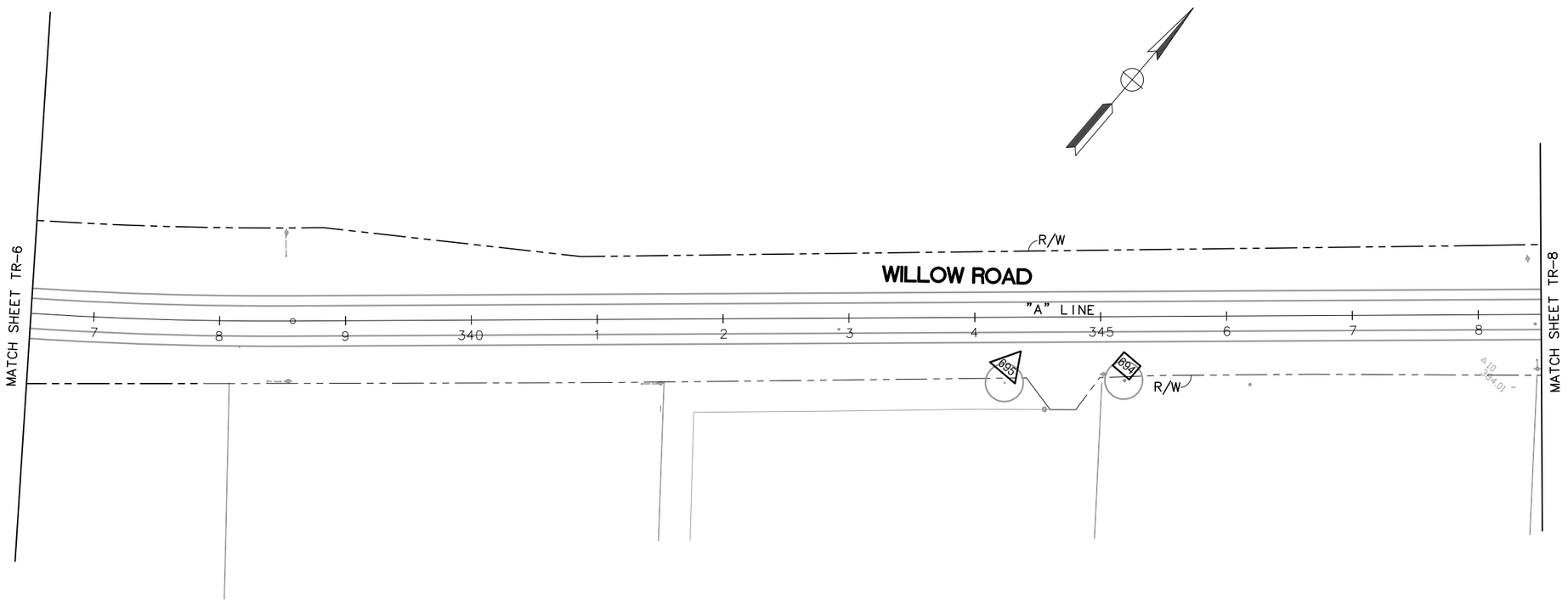


THIS PLAN ACCURATE FOR TREE REMOVAL WORK ONLY.

# TREE REMOVAL PLAN

SCALE 1" = 50'

**TR-7**

| REVISED BY | T.T., D.L., D.S. | CALCULATED-DESIGNED BY | CONSULTANT FUNCTIONAL SUPERVISOR |
|---|---|---|---|
| DATE REVISED | B.G. | CHECKED BY | K.G.M. |

STATE OF CALIFORNIA – DEPARTMENT OF TRANSPORTATION

Caltrans

LAST REVISION 05-05-10 | DATE PLOTTED => $DATE | TIME PLOTTED => $TIME

| Dist | COUNTY | ROUTE | POST MILES TOTAL PROJECT | SHEET No. | TOTAL SHEETS |
|---|---|---|---|---|---|
| 05 | SLO | 101 | 5.9/6.9 | 278 | 290 |

REGISTERED CIVIL ENGINEER — DATE 07/16/10

PLANS APPROVAL DATE

REGISTERED PROFESSIONAL ENGINEER — Bo Gao — No. C59985 — Exp. 6/30/12 — CIVIL — STATE OF CALIFORNIA

*THE STATE OF CALIFORNIA OR ITS OFFICERS OR AGENTS OR COUNTY SHALL NOT BE RESPONSIBLE FOR THE ACCURACY OR COMPLETENESS OF SCANNED COPIES OF THIS PLAN SHEET.*

RAJAPPAN & MEYER
CONSULTING ENGINEERS INC .
1038 LEIGH AVE . SUITE 100
SAN JOSE , CA 95126

COUNTY OF SAN LUIS OBISPO
DEPARTMENT OF PUBLIC WORKS
1050 MONTEREY STREET
SAN LUIS OBISPO, CA 93408

FOR NOTES, ABBREVIATIONS, AND LEGEND, SEE SHEET TR-1.

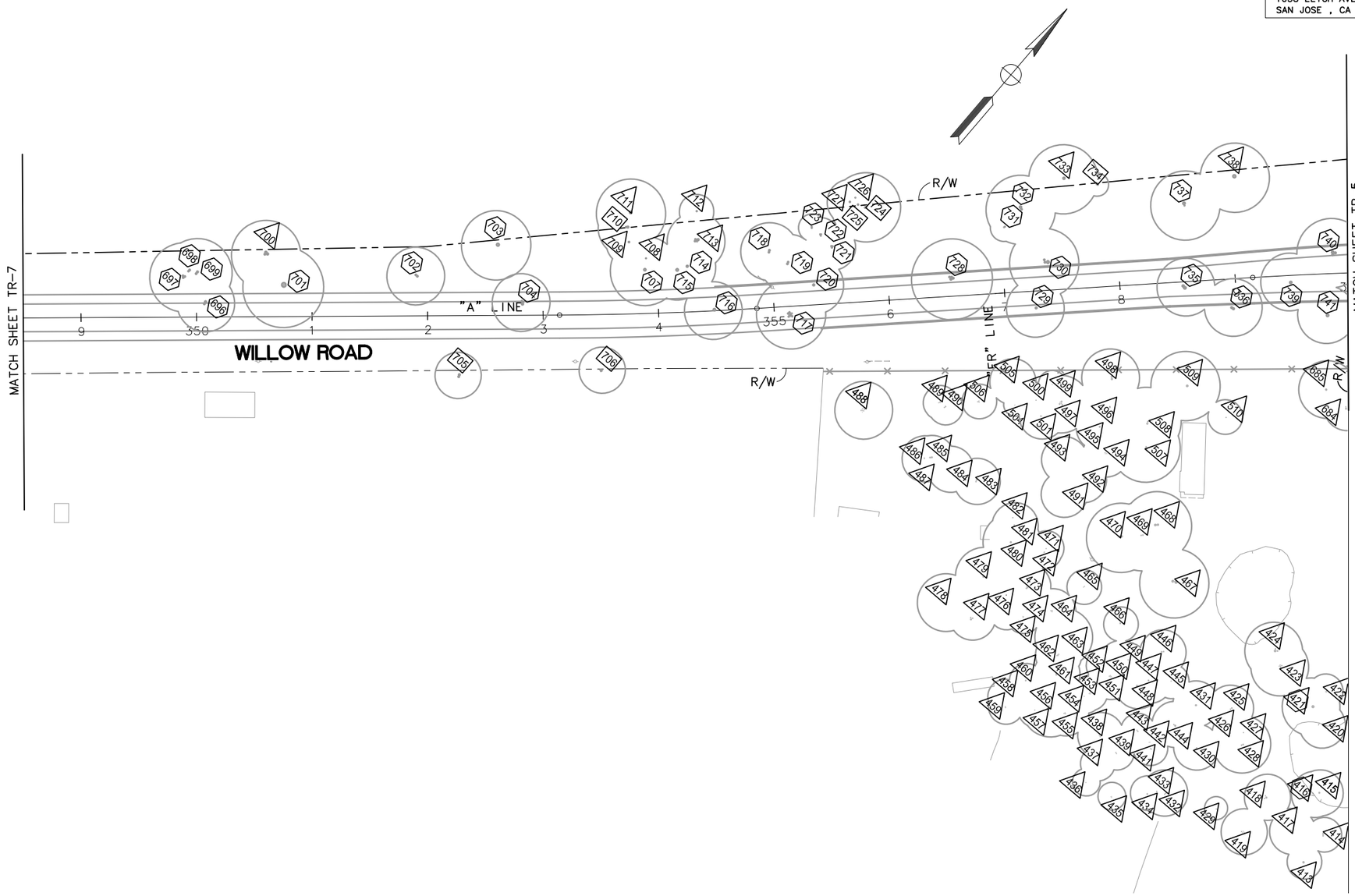


THIS PLAN ACCURATE FOR TREE REMOVAL WORK ONLY.

# TREE REMOVAL PLAN

SCALE 1" = 50'

**TR-8**

| REVISED BY | DATE REVISED |
|---|---|
| | |

T.T., D.L., D.S. — B.G.

CALCULATED-DESIGNED BY — CHECKED BY

CONSULTANT FUNCTIONAL SUPERVISOR — K.G.M.

STATE OF CALIFORNIA – DEPARTMENT OF TRANSPORTATION — Caltrans

LAST REVISION 07-16-10 — DATE PLOTTED => $DATE — TIME PLOTTED => $TIME

BORDER LAST REVISED 4/11/2008 — RELATIVE BORDER SCALE IS IN INCHES 0 1 2 3 — USERNAME =>$USER — DGN FILE => $REQUEST — CU — EA 05-474503

| Dist | COUNTY | ROUTE | POST MILES TOTAL PROJECT | SHEET No. | TOTAL SHEETS |
|---|---|---|---|---|---|
| 05 | SLO | 101 | 5.9/6.9 | 279 | 290 |

REGISTERED CIVIL ENGINEER — DATE 07/16/10

PLANS APPROVAL DATE

REGISTERED PROFESSIONAL ENGINEER — Bo Gao — No. C59985 — Exp. 6/30/12 — CIVIL — STATE OF CALIFORNIA

*THE STATE OF CALIFORNIA OR ITS OFFICERS OR AGENTS OR COUNTY SHALL NOT BE RESPONSIBLE FOR THE ACCURACY OR COMPLETENESS OF SCANNED COPIES OF THIS PLAN SHEET.*

RAJAPPAN & MEYER
CONSULTING ENGINEERS INC .
1038 LEIGH AVE . SUITE 100
SAN JOSE , CA 95126

COUNTY OF SAN LUIS OBISPO
DEPARTMENT OF PUBLIC WORKS
1050 MONTEREY STREET
SAN LUIS OBISPO, CA 93408

FOR NOTES, ABBREVIATIONS, AND LEGEND, SEE SHEET TR-1.

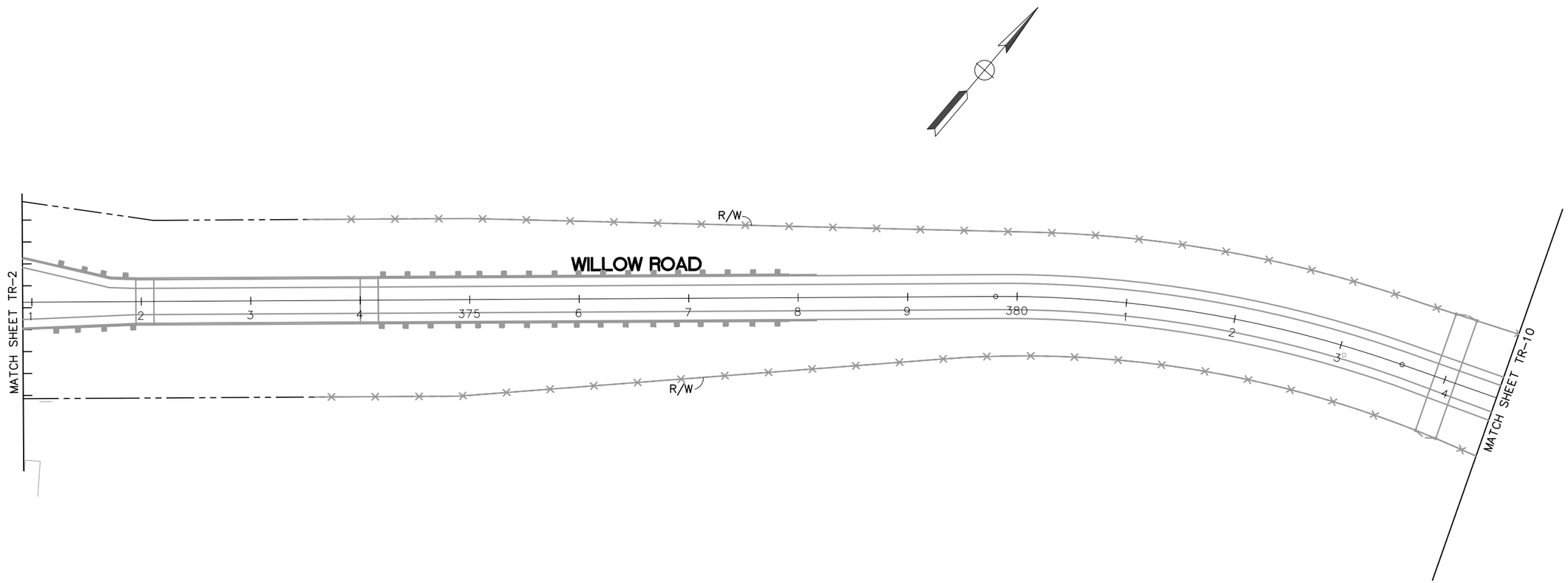


THIS PLAN ACCURATE FOR TREE REMOVAL WORK ONLY.

# TREE REMOVAL PLAN

SCALE 1" = 50'

**TR-9**

| REVISED BY | DATE REVISED |
|---|---|
| | |

T.T., D.L., D.S. — B.G.

CALCULATED-DESIGNED BY — CHECKED BY

CONSULTANT FUNCTIONAL SUPERVISOR — K.G.M.

STATE OF CALIFORNIA – DEPARTMENT OF TRANSPORTATION — Caltrans

LAST REVISION 07-16-10 — DATE PLOTTED => $DATE — TIME PLOTTED => $TIME

BORDER LAST REVISED 4/11/2008 — RELATIVE BORDER SCALE IS IN INCHES 0 1 2 3 — USERNAME =>$USER — DGN FILE => $REQUEST — CU — EA 05-474503

| Dist | COUNTY | ROUTE | POST MILES TOTAL PROJECT | SHEET No. | TOTAL SHEETS |
|---|---|---|---|---|---|
| 05 | SLO | 101 | 5.9/6.9 | 280 | 290 |

REGISTERED CIVIL ENGINEER — DATE 07/16/10

PLANS APPROVAL DATE

REGISTERED PROFESSIONAL ENGINEER — Bo Gao — No. C59985 — Exp. 6/30/12 — CIVIL — STATE OF CALIFORNIA

*THE STATE OF CALIFORNIA OR ITS OFFICERS OR AGENTS OR COUNTY SHALL NOT BE RESPONSIBLE FOR THE ACCURACY OR COMPLETENESS OF SCANNED COPIES OF THIS PLAN SHEET.*

RAJAPPAN & MEYER
CONSULTING ENGINEERS INC .
1038 LEIGH AVE . SUITE 100
SAN JOSE , CA 95126

COUNTY OF SAN LUIS OBISPO
DEPARTMENT OF PUBLIC WORKS
1050 MONTEREY STREET
SAN LUIS OBISPO, CA 93408

FOR NOTES, ABBREVIATIONS, AND LEGEND, SEE SHEET TR-1.

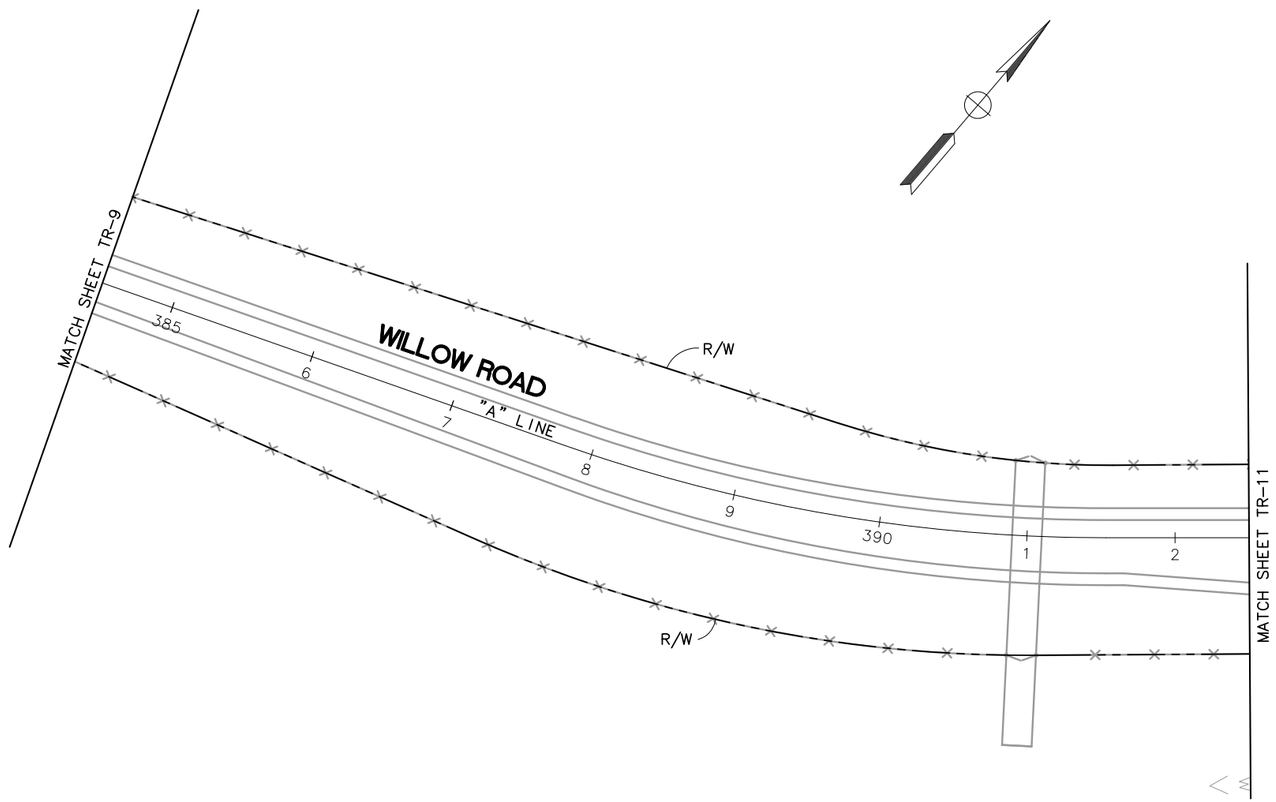


THIS PLAN ACCURATE FOR TREE REMOVAL WORK ONLY.

# TREE REMOVAL PLAN

SCALE 1" = 50'

**TR-10**

| REVISED BY | DATE REVISED |
|---|---|
| | |

T.T., D.L., D.S. — B.G.

CALCULATED-DESIGNED BY — CHECKED BY

CONSULTANT FUNCTIONAL SUPERVISOR — K.G.M.

STATE OF CALIFORNIA – DEPARTMENT OF TRANSPORTATION — Caltrans

LAST REVISION 07-16-10 — DATE PLOTTED => $DATE — TIME PLOTTED => $TIME

BORDER LAST REVISED 4/11/2008 — RELATIVE BORDER SCALE IS IN INCHES 0 1 2 3 — USERNAME =>$USER — DGN FILE => $REQUEST — CU — EA 05-474503

| Dist | COUNTY | ROUTE | POST MILES TOTAL PROJECT | SHEET No. | TOTAL SHEETS |
|---|---|---|---|---|---|
| 05 | SLO | 101 | 5.9/6.9 | 281 | 290 |

REGISTERED CIVIL ENGINEER — DATE 07/16/10

PLANS APPROVAL DATE

REGISTERED PROFESSIONAL ENGINEER — Bo Gao — No. C59985 — Exp. 6/30/12 — CIVIL — STATE OF CALIFORNIA

*THE STATE OF CALIFORNIA OR ITS OFFICERS OR AGENTS OR COUNTY SHALL NOT BE RESPONSIBLE FOR THE ACCURACY OR COMPLETENESS OF SCANNED COPIES OF THIS PLAN SHEET.*

RAJAPPAN & MEYER
CONSULTING ENGINEERS INC .
1038 LEIGH AVE . SUITE 100
SAN JOSE , CA 95126

COUNTY OF SAN LUIS OBISPO
DEPARTMENT OF PUBLIC WORKS
1050 MONTEREY STREET
SAN LUIS OBISPO, CA 93408

FOR NOTES, ABBREVIATIONS, AND LEGEND, SEE SHEET TR-1.

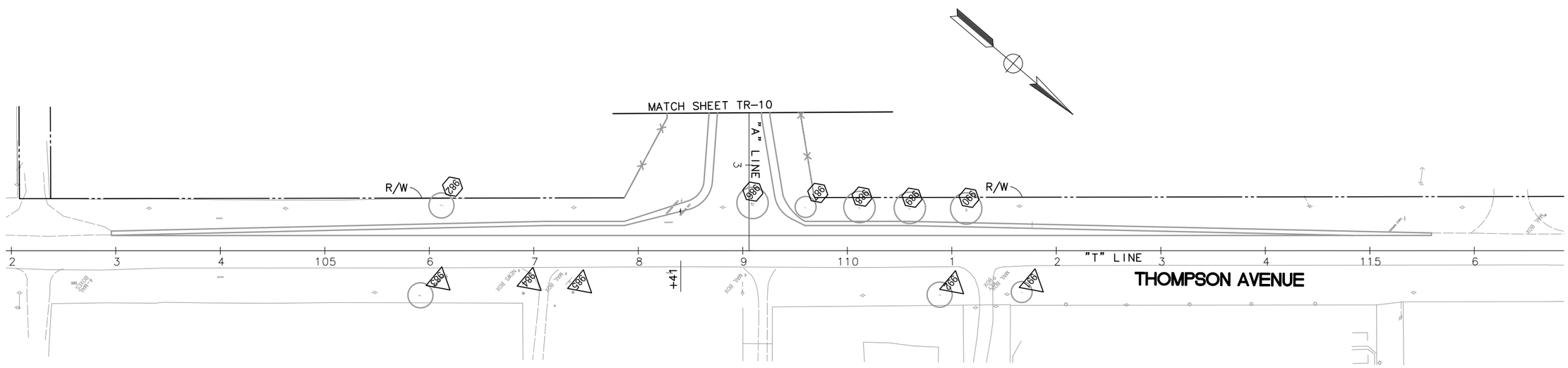


THIS PLAN ACCURATE FOR TREE REMOVAL WORK ONLY.

# TREE REMOVAL PLAN

SCALE 1" = 50'

**TR-11**

| REVISED BY | DATE REVISED |
|---|---|
| T.T., D.L., D.S. | B.G. |
| CALCULATED-DESIGNED BY | CHECKED BY |
| CONSULTANT FUNCTIONAL SUPERVISOR | K.G.M. |

STATE OF CALIFORNIA – DEPARTMENT OF TRANSPORTATION

Caltrans

LAST REVISION 07-16-10 | DATE PLOTTED => $DATE | TIME PLOTTED => $TIME

| Dist | COUNTY | ROUTE | POST MILES TOTAL PROJECT | SHEET No. | TOTAL SHEETS |
|---|---|---|---|---|---|
| 05 | SLO | 101 | 5.9/6.9 | 282 | 290 |

REGISTERED CIVIL ENGINEER 07/16/10 DATE

PLANS APPROVAL DATE

REGISTERED PROFESSIONAL ENGINEER Bo Gao No. C59985 Exp. 6/30/12 CIVIL STATE OF CALIFORNIA

*THE STATE OF CALIFORNIA OR ITS OFFICERS OR AGENTS OR COUNTY SHALL NOT BE RESPONSIBLE FOR THE ACCURACY OR COMPLETENESS OF SCANNED COPIES OF THIS PLAN SHEET.*

RAJAPPAN & MEYER
CONSULTING ENGINEERS INC .
1038 LEIGH AVE . SUITE 100
SAN JOSE , CA 95126

COUNTY OF SAN LUIS OBISPO
DEPARTMENT OF PUBLIC WORKS
1050 MONTEREY STREET
SAN LUIS OBISPO, CA 93408

FOR NOTES, ABBREVIATIONS, AND LEGEND, SEE SHEET TR-1.

| Tree Tag # | Tree Species | Dimension at Breast Height (inches) | Remain | Cut/Remove | Trim |
|---|---|---|---|---|---|
| 301 | Cypress | 8 | X | | |
| 302 | Cypress | 7 | X | | |
| 303 | Oak Cluster | 16, 15, 13, 11 | X | | |
| 304 | Oak | 15 | | X | |
| 305 | Oak | 15 | X | | |
| 306 | Oak Cluster | 10, 11, 16 | X | | |
| 307 | Oak Cluster | 15, 15, 15 | X | | |
| 308 | Oak | 25 | X | | |
| 309 | Oak | 16 | X | | |
| 310 | Oak | 20 | | X | |
| 311 | Oak Cluster | 14, 16 | | X | |
| 312 | Oak | 28 | | X | |
| 313 | Oak Cluster | 18, 22, 22 | | X | |
| 314 | Oak | 40 | | X | |
| 315 | Oak Cluster | 17, 18, 19, 18 | X | | |
| 316 | Oak Cluster | 20, 19 | X | | |
| 317 | Oak | 7 | X | | |
| 318 | Oak | 15 | X | | |
| 319 | Oak | 8 | X | | |
| 320 | Oak | 18 | X | | |
| 321 | Oak | 23 | X | | |
| 322 | Oak Cluster | 15, 18, 15 | X | | |
| 323 | Oak | 18 | X | | |
| 324 | Oak Cluster | 22, 18 | X | | |
| 325 | Oak | 20 | | X | |
| 326 | Oak | 15 | X | | |
| 327 | Oak | 27 | X | | |
| 328 | Oak Cluster | 22, 26 | X | | |
| 329 | Oak | 21, 24 | X | | |
| 330 | Oak | 17 | | X | |
| 331 | Oak | 24 | | X | |
| 332 | Oak | 10, 16 | | X | |
| 333 | Oak | 14 | | X | |
| 334 | Oak Cluster | 6, 6, 7 | X | | |
| 335 | Oak Cluster | 6 | X | | |
| 336 | Oak Cluster | 16, 18 | | | X |
| 337 | Oak | 14 | X | | |

**Please Note: Multiple breast height dimensions represent the number of trunks on tree**

**Shaded tag numbered rows represent trees that were located on the propery line and tree count was split (shared) between property owners.**

| Tree Tag # | Tree Species | Dimension at Breast Height (inches) | Remain | Cut/Remove | Trim |
|---|---|---|---|---|---|
| 338 | Oak Cluster | 13, 16 | X | | |
| 339 | Oak Cluster | 9, 16 | | X | |
| 340 | Oak | 24 | | X | |
| 341 | Oak Cluster | 12, 13, 15 | | X | |
| 342 | Oak Cluster | 18, 22 | | X | |
| 343 | Oak Cluster | 20, 22 | | X | |
| 344 | Oak Cluster | 15, 18 | | X | |
| 345 | Oak | 14 | X | | |
| 346 | Oak Cluster | 7, 7, 8, 8, 8, 9, 10 | X | | |
| 347 | Oak | 15 | | X | |
| 348 | Oak | 24 | | X | |
| 349 | Oak Cluster | 8, 8, 10, 10 | | X | |
| 350 | Oak Cluster | 10, 15, 12, 16 | | X | |
| 351 | Oak Cluster | 27, 25 | | X | |
| 352 | Oak | 13 | | X | |
| 353 | Oak | 18 | | X | |
| 354 | Oak | 17 | | X | |
| 355 | Oak | 14 | | X | |
| 356 | Oak Cluster | 10, 17 | | X | |
| 357 | Oak | 18 | X | | |
| 358 | Oak | 17 | X | | |
| 359 | Oak | 24 | X | | |
| 360 | Oak | 22 | | X | |
| 361 | Oak | 18 | X | | |
| 363 | Oak Cluster | 17, 19 | | X | |
| 364 | Oak Cluster | 11, 14 | | X | |
| 365 | Oak | 16 | | X | |
| 366 | Oak Cluster | 12, 14 | | X | |
| 367 | Oak | 11 | | | X |
| 368 | Oak | 19 | | X | |
| 369 | Oak Cluster | 13, 15 | | X | |
| 370 | Oak | 21 | | X | |
| 371 | Oak Cluster | 13, 15, 7, 14 | | X | |
| 372 | Oak | 6 | | X | |
| 374 | Oak Cluster | 8, 7, 11 | | | X |
| 375 | Oak Cluster | 14, 17 | | X | |
| 376 | Oak Cluster | 10, 15 | | X | |

**Please Note: Multiple breast height dimensions represent the number of trunks on tree**

**Shaded tag numbered rows represent trees that were located on the propery line and tree count was split (shared) between property owners.**

THIS PLAN ACCURATE FOR TREE REMOVAL WORK ONLY.

# TREE REMOVAL LIST

## TR-12

REVISED BY | DATE REVISED

T.T., D.L., D.S. | B.G.

CALCULATED-DESIGNED BY | CHECKED BY

CONSULTANT FUNCTIONAL SUPERVISOR | K.G.M.

STATE OF CALIFORNIA – DEPARTMENT OF TRANSPORTATION

Caltrans

LAST REVISION 07-16-10 | DATE PLOTTED => $DATE | TIME PLOTTED => $TIME

| Dist | COUNTY | ROUTE | POST MILES TOTAL PROJECT | SHEET No. | TOTAL SHEETS |
|---|---|---|---|---|---|
| 05 | SLO | 101 | 5.9/6.9 | 283 | 290 |

REGISTERED CIVIL ENGINEER — DATE 07/16/10

PLANS APPROVAL DATE

REGISTERED PROFESSIONAL ENGINEER — Bo Gao — No. C59985 — Exp. 6/30/12 — CIVIL — STATE OF CALIFORNIA

*THE STATE OF CALIFORNIA OR ITS OFFICERS OR AGENTS OR COUNTY SHALL NOT BE RESPONSIBLE FOR THE ACCURACY OR COMPLETENESS OF SCANNED COPIES OF THIS PLAN SHEET.*

RAJAPPAN & MEYER
CONSULTING ENGINEERS INC .
1038 LEIGH AVE . SUITE 100
SAN JOSE , CA 95126

COUNTY OF SAN LUIS OBISPO
DEPARTMENT OF PUBLIC WORKS
1050 MONTEREY STREET
SAN LUIS OBISPO, CA 93408

FOR NOTES, ABBREVIATIONS, AND LEGEND, SEE SHEET TR-1.

| Tree Tag # | Tree Species | Dimension at Breast Height (inches) | Remain | Cut/Remove | Trim |
|---|---|---|---|---|---|
| 377 | Oak | 22 | X | | |
| 378 | Oak | 16 | X | | |
| 379 | Oak Cluster | 21, 13 | X | | |
| 380 | Oak Cluster | 10, 10, 11 | X | | |
| 381 | Oak | 33 | | | X |
| 382 | Oak Cluster | 9, 11 | | | X |
| 383 | Oak | 24 | | X | |
| 384 | Oak Cluster | 7, 6, 6, 6, 7 | | X | |
| 385 | Oak | 22 | | X | |
| 386 | Oak Cluster | 9,10, 11 | | X | |
| 387 | Oak Cluster | 13, 13, 15, 13 | | X | |
| 388 | Oak | 24 | | X | |
| 389 | Oak Cluster | 14, 9 | | X | |
| 390 | Oak Cluster | 10, 10, 16 | | X | |
| 391 | Oak Cluster | 17, 17, 18, 20 | | X | |
| 392 | Oak | 22 | X | | |
| 393 | Oak Cluster | 24, 28 | X | | |
| 394 | Oak | 17 | X | | |
| 395 | Oak | 20 | X | | |
| 396 | Oak Cluster | 8, 14, 14, 16, 15 | X | | |
| 397 | Oak Cluster | 14, 21 | X | | |
| 398 | Oak | 18 | X | | |
| 399 | Oak | 19 | | X | |
| 400 | Oak | 21 | | X | |
| 401 | Oak Cluster | 15, 13, 13 | | X | |
| 402 | Oak Cluster | 8, 10 | X | | |
| 403 | Oak | 18 | X | | |
| 404 | Oak Cluster | 18, 22 | | X | |
| 405 | Oak Cluster | 22, 22, 16 | X | | |
| 406 | Oak Cluster | 34 | X | | |
| 407 | Oak Cluster | 16, 17, 14 | | X | |
| 408 | Oak | 37 | | X | |
| 409 | Oak Cluster | 23, 21 | | X | |
| 411 | Oak Cluster | 15, 16 | X | | |
| 412 | Oak Cluster | 20, 23 | X | | |
| 413 | Oak | 25 | X | | |
| 414 | Oak Cluster | 17, 19 | | X | |

**Please Note: Multiple breast height dimensions represent the number of trunks on tree**

**Shaded tag numbered rows represent trees that were located on the propery line and tree count was split (shared) between property owners.**

| Tree Tag # | Tree Species | Dimension at Breast Height (inches) | Remain | Cut/Remove | Trim |
|---|---|---|---|---|---|
| 415 | Oak | 20 | | X | |
| 416 | Oak Cluster | 16, 18, 16 | | X | |
| 417 | Oak Cluster | 13, 16, 18 | | X | |
| 418 | Oak Cluster | 21, 13, 15 | | X | |
| 419 | Oak Cluster | 13, 14, 12, 12 | | X | |
| 420 | Oak Cluster | 12, 24, 15 | | X | |
| 421 | Oak | 32 | | X | |
| 422 | Oak Cluster | 8, 11, 14 | X | | |
| 423 | Oak Cluster | 11, 14, 13, 15, 16 | X | | |
| 424 | Oak Cluster | 16, 27, 18 | X | | |
| 425 | Oak Cluster | 15, 17 | | X | |
| 426 | Oak Cluster | 18 | | X | |
| 427 | Oak | 13 | | X | |
| 428 | Oak Cluster | 18, 16 | | X | |
| 429 | Oak Cluster | 13 | | X | |
| 430 | Oak Cluster | 17, 14, 13 | | X | |
| 431 | Oak | 22 | | X | |
| 432 | Oak Cluster | 15, 15 | | X | |
| 433 | Oak | 16 | | X | |
| 434 | Oak | 18 | X | | |
| 435 | Oak Cluster | 7, 9, 10 | X | | |
| 436 | Oak | 10 | X | | |
| 437 | Oak Cluster | 14, 17 | X | | |
| 438 | Oak Cluster | 13, 12, 14, 11, 12 | | X | |
| 439 | Oak Cluster | 11, 14 | | X | |
| 441 | Oak Cluster | 12, 9, 12 | | X | |
| 442 | Oak Cluster | 9, 8 | | X | |
| 443 | Oak Cluster | 14, 13 | | X | |
| 444 | Oak | 15, 22 | | X | |
| 445 | Oak | 13 | | X | |
| 446 | Oak Cluster | 18, 16 | | X | |
| 447 | Oak | 18 | | X | |
| 448 | Oak | 20 | | X | |
| 449 | Oak | 13 | | X | |
| 450 | Oak Cluster | 6, 11, 12 | | X | |
| 451 | Oak Cluster | 7, 9, 14, 9, 11 | | X | |
| 452 | Oak Cluster | 10, 7 | | X | |

**Please Note: Multiple breast height dimensions represent the number of trunks on tree**

**Shaded tag numbered rows represent trees that were located on the propery line and tree count was split (shared) between property owners.**

THIS PLAN ACCURATE FOR TREE REMOVAL WORK ONLY.

# TREE REMOVAL LIST

## TR-13

REVISED BY | DATE REVISED

T.T., D.L., D.S. | B.G.

CALCULATED-DESIGNED BY | CHECKED BY

CONSULTANT FUNCTIONAL SUPERVISOR | K.G.M.

STATE OF CALIFORNIA – DEPARTMENT OF TRANSPORTATION

LAST REVISION 07-16-10 | DATE PLOTTED => $DATE | TIME PLOTTED => $TIME

| Dist | COUNTY | ROUTE | POST MILES TOTAL PROJECT | SHEET No. | TOTAL SHEETS |
|---|---|---|---|---|---|
| 05 | SLO | 101 | 5.9/6.9 | 284 | 290 |

REGISTERED CIVIL ENGINEER — DATE 07/16/10

PLANS APPROVAL DATE

REGISTERED PROFESSIONAL ENGINEER — Bo Gao — No. C59985 — Exp. 6/30/12 — CIVIL — STATE OF CALIFORNIA

*THE STATE OF CALIFORNIA OR ITS OFFICERS OR AGENTS OR COUNTY SHALL NOT BE RESPONSIBLE FOR THE ACCURACY OR COMPLETENESS OF SCANNED COPIES OF THIS PLAN SHEET.*

RAJAPPAN & MEYER
CONSULTING ENGINEERS INC .
1038 LEIGH AVE . SUITE 100
SAN JOSE , CA 95126

COUNTY OF SAN LUIS OBISPO
DEPARTMENT OF PUBLIC WORKS
1050 MONTEREY STREET
SAN LUIS OBISPO, CA 93408

FOR NOTES, ABBREVIATIONS, AND LEGEND, SEE SHEET TR-1.

| Tree Tag # | Tree Species | Dimension at Breast Height (inches) | Remain | Cut/Remove | Trim |
|---|---|---|---|---|---|
| 453 | Oak Cluster | 10, 11, 10 | | X | |
| 454 | Oak | 12 | | X | |
| 455 | Oak Cluster | 13, 14, 9 | | X | |
| 456 | Oak Cluster | 19, 17, 23 | X | | |
| 457 | Oak | 12 | X | | |
| 458 | Oak | 10 | X | | |
| 459 | Oak Cluster | 13, 10 | X | | |
| 460 | Oak | 17 | X | | |
| 461 | Oak Cluster | 13, 18 | | X | |
| 462 | Oak Cluster | 11, 9, 13, 13 | | X | |
| 463 | Oak Cluster | 14, 8, 9, 10, 17 | | X | |
| 464 | Oak Cluster | 11, 11, 15 | | X | |
| 465 | Oak Cluster | 11, 10 | | X | |
| 466 | Oak | 19 | | X | |
| 467 | Oak Cluster | 30, 35 | X | | |
| 468 | Oak Cluster | 28, 26 | X | | |
| 469 | Oak Cluster | 15, 17 | X | | |
| 470 | Oak Cluster | 23, 23 | | X | |
| 471 | Oak | 12 | | X | |
| 472 | Oak | 15 | | X | |
| 473 | Oak Cluster | 11, 16, 17 | | X | |
| 474 | Oak | 18 | | X | |
| 475 | Oak Cluster | 9, 7, 11 | | X | |
| 476 | Oak Cluster | 12, 16 | | X | |
| 477 | Oak Cluster | 15, 17, 21 | X | | |
| 478 | Oak | 26 | X | | |
| 479 | Oak | 21 | X | | |
| 480 | Oak | 22 | | X | |
| 481 | Oak | 17 | | X | |
| 482 | Oak | 14 | | X | |
| 483 | Oak Cluster | 17, 16 | | X | |
| 484 | Oak Cluster | 12, 16 | X | | |
| 485 | Oak Cluster | 19, 20 | X | | |
| 486 | Oak Cluster | 7, 8, 13 | X | | |
| 487 | Oak Cluster | 8, 11 | X | | |
| 488 | Oak Cluster | 11, 15,14, 14, 8, 13, 8 | X | | |
| 489 | Oak Cluster | 12, 12, 14 | | X | |

**Please Note: Multiple breast height dimensions represent the number of trunks on tree**

**Shaded tag numbered rows represent trees that were located on the propery line and tree count was split (shared) between property owners.**

| Tree Tag # | Tree Species | Dimension at Breast Height (inches) | Remain | Cut/Remove | Trim |
|---|---|---|---|---|---|
| 490 | Oak Cluster | 13, 17 | | X | |
| 491 | Oak Cluster | 17, 14 | | X | |
| 492 | Oak | 20 | | X | |
| 493 | Oak | 21 | | X | |
| 494 | Oak Cluster | 7, 6, 6, 7, 9, 10 | | X | |
| 495 | Oak | 20 | | X | |
| 496 | Oak | 18 | | X | |
| 497 | Oak Cluster | 11, 18, 18, 19, 14 | | X | |
| 498 | Oak Cluster | 21, 24 | X | | |
| 499 | Oak Cluster | 6, 7 | | X | |
| 500 | Oak | 13 | | X | |
| 501 | Oak Cluster | 18 | | X | |
| 504 | Oak Cluster | 7, 6 | | X | |
| 505 | Oak Cluster | 6, 15, 14, 14 | | X | |
| 506 | Oak Cluster | 11, 12, 14 | | X | |
| 507 | Oak Cluster | 12, 14, 12, 16 | X | | |
| 508 | Oak Cluster | 18, 23 | X | | |
| 509 | Oak | 28 | X | | |
| 510 | Oak | 14 | X | | |
| 511 | Oak | 6 | | X | |
| 512 | Oak | 17 | | X | |
| 513 | Oak Cluster | 6, 8, 6 | | X | |
| 515 | Oak Cluster | 6, 6, 7, 6 | X | | |
| 518 | Oak | 16 | | X | |
| 519 | Oak | 20 | | X | |
| 520 | Oak Cluster | 14, 15 | | X | |
| 522 | Oak Cluster | 18, 22 | | X | |
| 523 | Oak Cluster | 18, 24 | | X | |
| 526 | Oak Cluster | 9, 11, 6, 7, 12, 13, 10 | | X | |
| 527 | Oak Cluster | 10, 12 | | X | |
| 528 | Oak Cluster | 11, 11, 11, 11 | | X | |
| 529 | Oak | 16 | | X | |
| 530 | Oak | 16 | | X | |
| 531 | Oak Cluster | 19, 15 | | X | |
| 532 | Oak Cluster | 15, 14 | | X | |
| 533 | Oak Cluster | 15, 14 | | X | |
| 534 | Oak | 12 | | X | |

**Please Note: Multiple breast height dimensions represent the number of trunks on tree**

**Shaded tag numbered rows represent trees that were located on the propery line and tree count was split (shared) between property owners.**

THIS PLAN ACCURATE FOR TREE REMOVAL WORK ONLY.

# TREE REMOVAL LIST

## TR-14

REVISED BY | DATE REVISED

T.T., D.L., D.S. | B.G.

CALCULATED-DESIGNED BY | CHECKED BY

CONSULTANT FUNCTIONAL SUPERVISOR | K.G.M.

STATE OF CALIFORNIA - DEPARTMENT OF TRANSPORTATION

Caltrans

LAST REVISION 07-16-10 | DATE PLOTTED => $DATE | TIME PLOTTED => $TIME

| Dist | COUNTY | ROUTE | POST MILES TOTAL PROJECT | SHEET No. | TOTAL SHEETS |
|---|---|---|---|---|---|
| 05 | SLO | 101 | 5.9/6.9 | 285 | 290 |

REGISTERED CIVIL ENGINEER — DATE 07/16/10

PLANS APPROVAL DATE

REGISTERED PROFESSIONAL ENGINEER — Bo Gao — No. C59985 — Exp. 6/30/12 — CIVIL — STATE OF CALIFORNIA

*THE STATE OF CALIFORNIA OR ITS OFFICERS OR AGENTS OR COUNTY SHALL NOT BE RESPONSIBLE FOR THE ACCURACY OR COMPLETENESS OF SCANNED COPIES OF THIS PLAN SHEET.*

RAJAPPAN & MEYER
CONSULTING ENGINEERS INC .
1038 LEIGH AVE . SUITE 100
SAN JOSE , CA 95126

COUNTY OF SAN LUIS OBISPO
DEPARTMENT OF PUBLIC WORKS
1050 MONTEREY STREET
SAN LUIS OBISPO, CA 93408

FOR NOTES, ABBREVIATIONS, AND LEGEND, SEE SHEET TR-1.

| Tree Tag # | Tree Species | Dimension at Breast Height (inches) | Remain | Cut/Remove | Trim |
|---|---|---|---|---|---|
| 535 | Oak | 23 | | X | |
| 536 | Oak Cluster | 8, 7, 6, 7, 7 | | X | |
| 537 | Oak Cluster | 13, 13, 7, 9, 14 | X | | |
| 538 | Oak Cluster | 6, 6, 6, 7 | X | | |
| 539 | Oak Cluster | 25, 17, 17 | | X | |
| 541 | Oak Cluster | 9, 9, 13 | | X | |
| 542 | Oak | 30 | | X | |
| 543 | Oak Cluster | 12, 7, 6, 8, 8, 7 | | X | |
| 544 | Oak Cluster | 11, 16, 17 | | X | |
| 545 | Oak Cluster | 12, 10 | | X | |
| 546 | Oak | 12 | | X | |
| 547 | Oak Cluster | 12, 13, 13 | X | | |
| 548 | Oak Cluster | 6, 7 | X | | |
| 549 | Oak | 21 | X | | |
| 550 | Oak Cluster | 17, 13 | X | | |
| 551 | Oak Cluster | 9, 11, 16, 14 | | | X |
| 552 | Oak Cluster | 11, 17, 17 | | X | |
| 553 | Oak | 22 | | X | |
| 554 | Oak Cluster | 14, 13 | | X | |
| 555 | Oak Cluster | 20, 6 | | X | |
| 556 | Oak Cluster | 13, 10, 14 | | X | |
| 557 | Oak Cluster | 15, 15, 15 | | X | |
| 558 | Oak Cluster | 10, 15, 20 | | X | |
| 559 | Oak Cluster | 8, 12 | | X | |
| 560 | Oak Cluster | 16, 24 | | X | |
| 561 | Oak | 24 | X | | |
| 562 | Oak Cluster | 20, 11 | X | | |
| 563 | Oak | 20 | X | | |
| 564 | Oak Cluster | 24 | X | | |
| 565 | Oak Cluster | 19, 15 | | X | |
| 566 | Oak | 19 | X | | |
| 567 | Oak Cluster | 17, 24 | X | | |
| 568 | Oak | 18 | X | | |
| 569 | Oak Cluster | 9, 13, 13 | X | | |
| 570 | Oak Cluster | 10, 13, 15 | X | | |
| 571 | Oak | 20 | X | | |
| 573 | Oak Cluster | 7, 7, 6 | X | | |

**Please Note: Multiple breast height dimensions represent the number of trunks on tree**

**Shaded tag numbered rows represent trees that were located on the propery line and tree count was split (shared) between property owners.**

| Tree Tag # | Tree Species | Dimension at Breast Height (inches) | Remain | Cut/Remove | Trim |
|---|---|---|---|---|---|
| 574 | Oak | 20 | X | | |
| 575 | Oak | 17 | X | | |
| 576 | Oak | 14 | X | | |
| 577 | Oak | 21 | X | | |
| 578 | Oak | 12 | X | | |
| 579 | Oak | 17 | X | | |
| 580 | Oak Cluster | 11, 13, 15 | X | | |
| 581 | Oak Cluster | 16, 9, 12 | X | | |
| 582 | Oak Cluster | 23, 20 | X | | |
| 583 | Oak | 24 | X | | |
| 584 | Oak Cluster | 6, 7 | | X | |
| 585 | Oak | 7 | | X | |
| 586 | Oak Cluster | 11, 22 | | X | |
| 587 | Oak Cluster | 6, 6, 9, 8 | | X | |
| 588 | Oak | 6 | | X | |
| 590 | Oak | 11 | | X | |
| 591 | Oak Cluster | 7 | | X | |
| 592 | Oak | 11 | | X | |
| 593 | Oak Cluster | 8 | | X | |
| 595 | Oak Cluster | 7 | | X | |
| 598 | Oak | 13 | | X | |
| 599 | Oak Cluster | 18, 13 | | X | |
| 600 | Oak Cluster | 16, 12, 24 | | X | |
| 647 | Oak Cluster | 9, 7, 10, 13, 12, 10, 10, 20 | X | | |
| 648 | Oak Cluster | 22, 20, 15 | X | | |
| 649 | Oak Cluster | 10, 11, 16 | X | | |
| 650 | Oak Cluster | 12, 16, 15, 8, 11 | | X | |
| 651 | Oak Cluster | 9, 8 | | X | |
| 652 | Oak Cluster | 10, 11, 14, 16, 15 | | X | |
| 653 | Oak | 13 | | X | |
| 654 | Oak Cluster | 10, 11 | | X | |
| 655 | Oak | 13 | | X | |
| 656 | Oak | 21 | | X | |
| 657 | Oak Cluster | 13, 18 | X | | |
| 658 | Oak Cluster | 11, 11 | X | | |
| 659 | Oak Cluster | 7, 7 | X | | |
| 660 | Oak Cluster | 10, 11 | X | | |

**Please Note: Multiple breast height dimensions represent the number of trunks on tree**

**Shaded tag numbered rows represent trees that were located on the propery line and tree count was split (shared) between property owners.**

THIS PLAN ACCURATE FOR TREE REMOVAL WORK ONLY.

# TREE REMOVAL LIST

## TR-15

REVISED BY | DATE REVISED
T.T., D.L., D.S. | B.G.
CALCULATED-DESIGNED BY | CHECKED BY
CONSULTANT FUNCTIONAL SUPERVISOR | K.G.M.
STATE OF CALIFORNIA – DEPARTMENT OF TRANSPORTATION | Caltrans

LAST REVISION 07-16-10 | DATE PLOTTED => $DATE | TIME PLOTTED => $TIME

| Dist | COUNTY | ROUTE | POST MILES TOTAL PROJECT | SHEET No. | TOTAL SHEETS |
|---|---|---|---|---|---|
| 05 | SLO | 101 | 5.9/6.9 | 286 | 290 |

REGISTERED CIVIL ENGINEER — DATE 07/16/10

PLANS APPROVAL DATE

REGISTERED PROFESSIONAL ENGINEER — Bo Gao — No. C59985 — Exp. 6/30/12 — CIVIL — STATE OF CALIFORNIA

*THE STATE OF CALIFORNIA OR ITS OFFICERS OR AGENTS OR COUNTY SHALL NOT BE RESPONSIBLE FOR THE ACCURACY OR COMPLETENESS OF SCANNED COPIES OF THIS PLAN SHEET.*

RAJAPPAN & MEYER
CONSULTING ENGINEERS INC .
1038 LEIGH AVE . SUITE 100
SAN JOSE , CA 95126

COUNTY OF SAN LUIS OBISPO
DEPARTMENT OF PUBLIC WORKS
1050 MONTEREY STREET
SAN LUIS OBISPO, CA 93408

FOR NOTES, ABBREVIATIONS, AND LEGEND, SEE SHEET TR-1.

| Tree Tag # | Tree Species | Dimension at Breast Height (inches) | Remain | Cut/Remove | Trim |
|---|---|---|---|---|---|
| 661 | Oak Cluster | 12, 14, 20 | X | | |
| 662 | Oak Cluster | 12, 15 | | X | |
| 663 | Oak | 18 | | X | |
| 664 | Oak Cluster | 15, 15 | X | | |
| 665 | Oak Cluster | 13 | | X | |
| 666 | Oak Cluster | 14, 15, 18 | | X | |
| 667 | Oak Cluster | 11, 15, 15, 17 | | X | |
| 668 | Oak Cluster | 12, 15, 11 | | X | |
| 669 | Oak Cluster | 12, 16 | | X | |
| 670 | Oak | 14 | | X | |
| 671 | Oak | 27 | | X | |
| 672 | Oak Cluster | 7, 7, 11 | | X | |
| 673 | Oak Cluster | 14, 16, 15, 19 | | X | |
| 674 | Oak Cluster | 15, 17 | | X | |
| 675 | Oak Cluster | 7, 7, 9 | | X | |
| 676 | Oak | 13 | | X | |
| 677 | Oak Cluster | 12, 13 | | X | |
| 678 | Oak | 24 | X | | |
| 679 | Oak | 20 | X | | |
| 680 | Oak Cluster | 16, 18 | X | | |
| 681 | Oak Cluster | 6, 12, 11, 10 | X | | |
| 682 | Oak Cluster | 26, 26 | X | | |
| 684 | Oak Cluster | 14, 22 | X | | |
| 685 | Oak Cluster | 24 | X | | |
| 686 | Pepper Cluster | 9, 7, 8, 8, 11, 12, 14, 10 | | X | |
| 687 | Oak Cluster | 11, 10 | | X | |
| 688 | Oak Cluster | 9, 10 | X | | |
| 691 | Oak Cluster | 8 | X | | |
| 692 | Willow Cluster | 2, 6 | X | | |
| 693 | Multi-Trunk Pine | 13, 42 | | X | |
| 694 | Multi-Trunk Acacia | 6, 7, 7 | | | X |
| 695 | Acacia | 8 | X | | |
| 696 | Multi-Trunk Oak | 20, 17 | | X | |
| 697 | Oak Cluster | 14, 14, 17 | | X | |
| 698 | Multi-Trunk Oak | 13, 16 | | X | |
| 699 | Oak Cluster | 16, 18 | | X | |
| 700 | Multi-Trunk Oak | 16, 22, 20 | X | | |

**Please Note: Multiple breast height dimensions represent the number of trunks on tree**

**Shaded tag numbered rows represent trees that were located on the propery line and tree count was split (shared) between property owners.**

| Tree Tag # | Tree Species | Dimension at Breast Height (inches) | Remain | Cut/Remove | Trim |
|---|---|---|---|---|---|
| 701 | Oak | 47 | | X | |
| 702 | Multi-Trunk Oak | 15, 16 | | X | |
| 703 | Oak | 30 | X | | |
| 704 | Multi-Trunk Oak | 6, 7, 13, 20 | | X | |
| 705 | Multi-Trunk Oak | 16, 18 | | | X |
| 706 | Multi-Trunk Oak | 6, 7, 8, 9 | | | X |
| 707 | Oak | 24 | | X | |
| 708 | Oak | 8 | X | | |
| 709 | Oak | 14 | X | | |
| 710 | Multi-Trunk Oak | 12, 18 | | | X |
| 711 | Oak | 27 | X | | |
| 712 | Oak | 10 | X | | |
| 713 | Mult-Trunk Oak | 10, 14, 13, 7, 20 | X | | |
| 714 | Oak | 20 | | X | |
| 715 | Oak | 26 | | X | |
| 716 | Oak | 26 | | X | |
| 717 | Oak Cluster | 16, 7, 11, 7, 8, 12, 12, 12 | | X | |
| 718 | Oak Cluser | 14, 16 | | X | |
| 719 | Oak Cluster | 13, 15 | | X | |
| 720 | Oak | 20 | | X | |
| 721 | Oak Cluster | 11, 11, 10 | | X | |
| 722 | Oak Cluster | 8, 6, 7, 6 | | X | |
| 723 | Oak Cluster | 9, 9 | | X | |
| 724 | Oak Cluster | 13, 13 | | | X |
| 725 | Oak | 12 | | | X |
| 726 | Oak | 7 | X | | |
| 727 | Oak | 12 | X | | |
| 728 | Multi-Trunk Oak | 17, 20, 14, 15 | | X | |
| 729 | Oak | 18 | | X | |
| 730 | Oak Cluster | 16, 28, 15 | | X | |
| 731 | Oak Cluster | 6, 7 | | X | |
| 732 | Multi-Trunk Oak | 15, 24 | | X | |
| 733 | Oak | 22 | X | | |
| 734 | Oak Cluster | 6, 6, 6 | | | X |
| 735 | Multi-Trunk Oak | 25, 22 | | X | |
| 736 | Multi-Trunk Oak | 19, 17 | | X | |
| 737 | Multi-Trunk Oak | 8, 26 | | X | |

**Please Note: Multiple breast height dimensions represent the number of trunks on tree**

**Shaded tag numbered rows represent trees that were located on the propery line and tree count was split (shared) between property owners.**

THIS PLAN ACCURATE FOR TREE REMOVAL WORK ONLY.

# TREE REMOVAL LIST

## TR-16

REVISED BY | DATE REVISED
T.T., D.L., D.S. | B.G.
CALCULATED-DESIGNED BY | CHECKED BY
CONSULTANT FUNCTIONAL SUPERVISOR | K.G.M.
STATE OF CALIFORNIA – DEPARTMENT OF TRANSPORTATION
Caltrans

LAST REVISION 07-16-10 | DATE PLOTTED => $DATE | TIME PLOTTED => $TIME

| Dist | COUNTY | ROUTE | POST MILES TOTAL PROJECT | SHEET No. | TOTAL SHEETS |
|---|---|---|---|---|---|
| 05 | SLO | 101 | 5.9/6.9 | 287 | 290 |

REGISTERED CIVIL ENGINEER 07/16/10 DATE

PLANS APPROVAL DATE

REGISTERED PROFESSIONAL ENGINEER Bo Gao No. C59985 Exp. 6/30/12 CIVIL STATE OF CALIFORNIA

*THE STATE OF CALIFORNIA OR ITS OFFICERS OR AGENTS OR COUNTY SHALL NOT BE RESPONSIBLE FOR THE ACCURACY OR COMPLETENESS OF SCANNED COPIES OF THIS PLAN SHEET.*

RAJAPPAN & MEYER
CONSULTING ENGINEERS INC .
1038 LEIGH AVE . SUITE 100
SAN JOSE , CA 95126

COUNTY OF SAN LUIS OBISPO
DEPARTMENT OF PUBLIC WORKS
1050 MONTEREY STREET
SAN LUIS OBISPO, CA 93408

FOR NOTES, ABBREVIATIONS, AND LEGEND, SEE SHEET TR-1.

| Tree Tag # | Tree Species | Dimension at Breast Height (inches) | Remain | Cut/Remove | Trim |
|---|---|---|---|---|---|
| 738 | Oak | 32 | X | | |
| 739 | Oak | 24 | | X | |
| 740 | Multi-Trunk Oak | 24, 20, 18 | | X | |
| 741 | Oak | 26 | | X | |
| 742 | Multi-Trunk Oak | 12, 21, 25 | | X | |
| 743 | Oak | 32 | | X | |
| 744 | Oak | 14 | X | | |
| 745 | Oak | 15 | | X | |
| 746 | Oak | 23 | | X | |
| 747 | Oak | 14 | | X | |
| 748 | Oak | 16 | | X | |
| 749 | Oak | 8 | X | | |
| 750 | Oak | 15 | | X | |
| 751 | Oak | 17 | | X | |
| 752 | Multi-Trunk Oak | 15, 16, 19 | | X | |
| 753 | Multi-Trunk Oak | 6, 7, 8 | | X | |
| 754 | Oak | 7 | | X | |
| 755 | Mult-Trunk Oak | 6, 7, 9, 8, 18 | | X | |
| 756 | Oak | 20 | | X | |
| 757 | Oak | 19 | | X | |
| 758 | Multi-Trunk Oak | 14, 13, 16 | | X | |
| 759 | Oak Cluster | 14, 15 | | X | |
| 760 | Oak | 8 | | X | |
| 761 | Oak | 22 | X | | |
| 762 | Oak | 30 | | X | |
| 763 | Oak | 30 | | X | |
| 764 | Oak | 33 | | X | |
| 765 | Multi-Trunk Oak | 11, 18 | | X | |
| 766 | Oak | 17 | | X | |
| 767 | Multi-Trunk Oak | 17, 22 | | X | |
| 768 | Multi-Trunk Oak | 6, 10 | | X | |
| 769 | Mult-Trunk Oak | 9, 10, 12, 12 | X | | |
| 770 | Multi-Trunk Oak | 9, 14, 15 | X | | |
| 771 | Oak Cluster | 11, 13, 15, 14, 18 | X | | |
| 772 | Oak | 9 | X | | |
| 773 | Multi-Trunk Oak | 13, 7, 14, 8 | X | | |
| 774 | Oak | 6 | | X | |

**Please Note: Multiple breast height dimensions represent the number of trunks on tree**

**Shaded tag numbered rows represent trees that were located on the propery line and tree count was split (shared) between property owners.**

| Tree Tag # | Tree Species | Dimension at Breast Height (inches) | Remain | Cut/Remove | Trim |
|---|---|---|---|---|---|
| 775 | Oak | 6 | | X | |
| 776 | Oak | 20 | | X | |
| 777 | Multi-Trunk Oak | 6, 6, 6, 6 | | X | |
| 778 | Oak | 11 | | | X |
| 779 | Oak | 21 | | X | |
| 780 | Multi-Trunk Oak | 14, 18 | | X | |
| 781 | Oak Cluster | 12, 13 | | X | |
| 782 | Multi-Trunk Oak | 17, 13 | | X | |
| 783 | Oak | 14 | | X | |
| 784 | Oak | 14 | | X | |
| 785 | Oak Cluster | 11, 9, 15, 18 | | X | |
| 786 | Multi-Trunk Oak | 10, 14 | | X | |
| 787 | Oak Cluster | 7, 13, 14 | X | | |
| 788 | Multi-Trunk Oak | 15, 19 | X | | |
| 789 | Oak | 20 | X | | |
| 790 | Oak Cluster | 12, 12, 10 | X | | |
| 791 | Oak | 18 | X | | |
| 792 | Oak | 16 | X | | |
| 793 | Oak | 15 | X | | |
| 794 | Multi-Trunk Oak | 6, 13, 8 | X | | |
| 795 | Multi-Trunk Oak | 9, 13, 15 | X | | |
| 796 | Multi-Trunk Oak | 6, 6 | X | | |
| 797 | Multi-Trunk Oak | 9, 13, 13 | X | | |
| 798 | Multi-Trunk Oak | 16, 19 | X | | |
| 799 | Multi-Trunk Oak | 11, 14, 11 | | X | |
| 800 | Multi-Trunk Oak | 11, 13 | | X | |
| 801 | Oak | 18 | | X | |
| 802 | Oak | 20 | X | | |
| 803 | Oak | 13 | X | | |
| 804 | Oak Cluster | 7, 7 | | X | |
| 805 | Oak | 13 | | X | |
| 806 | Oak | 6 | | X | |
| 807 | Oak Cluster | 6, 12, 14 | X | | |
| 808 | Oak | 15 | X | | |
| 809 | Oak Cluster | 13, 17, 9 | | X | |
| 810 | Multi Trunk Oak | 13, 19 | | X | |
| 811 | Multi-Trunk Oak | 12, 16 | X | | |

**Please Note: Multiple breast height dimensions represent the number of trunks on tree**

**Shaded tag numbered rows represent trees that were located on the propery line and tree count was split (shared) between property owners.**

THIS PLAN ACCURATE FOR TREE REMOVAL WORK ONLY.

# TREE REMOVAL LIST

## TR-17

REVISED BY | DATE REVISED

T.T., D.L., D.S. | B.G.

CALCULATED-DESIGNED BY | CHECKED BY

CONSULTANT FUNCTIONAL SUPERVISOR | K.G.M.

STATE OF CALIFORNIA – DEPARTMENT OF TRANSPORTATION

Caltrans

LAST REVISION 07-16-10 | DATE PLOTTED => $DATE | TIME PLOTTED => $TIME

| Dist | COUNTY | ROUTE | POST MILES TOTAL PROJECT | SHEET No. | TOTAL SHEETS |
|---|---|---|---|---|---|
| 05 | SLO | 101 | 5.9/6.9 | 288 | 290 |

REGISTERED CIVIL ENGINEER — DATE 07/16/10

PLANS APPROVAL DATE

REGISTERED PROFESSIONAL ENGINEER — Bo Gao — No. C59985 — Exp. 6/30/12 — CIVIL — STATE OF CALIFORNIA

*THE STATE OF CALIFORNIA OR ITS OFFICERS OR AGENTS OR COUNTY SHALL NOT BE RESPONSIBLE FOR THE ACCURACY OR COMPLETENESS OF SCANNED COPIES OF THIS PLAN SHEET.*

RAJAPPAN & MEYER
CONSULTING ENGINEERS INC .
1038 LEIGH AVE . SUITE 100
SAN JOSE , CA 95126

COUNTY OF SAN LUIS OBISPO
DEPARTMENT OF PUBLIC WORKS
1050 MONTEREY STREET
SAN LUIS OBISPO, CA 93408

FOR NOTES, ABBREVIATIONS, AND LEGEND, SEE SHEET TR-1.

| Tree Tag # | Tree Species | Dimension at Breast Height (inches) | Remain | Cut/Remove | Trim |
|---|---|---|---|---|---|
| 812 | Oak | 13 | X | | |
| 813 | Oak | 10 | X | | |
| 814 | Multi-Trunk Oak | 11, 17 | X | | |
| 815 | Oak | 13 | X | | |
| 816 | Oak Cluster | 8, 14, 14 | X | | |
| 817 | Oak | 12 | X | | |
| 818 | Oak Cluster | 6, 8, 11, 11 | X | | |
| 819 | Multi-Trunk Oak | 8, 9 | X | | |
| 820 | Oak | 11 | X | | |
| 821 | Multi-Trunk Oak | 11, 11, 11 | | X | |
| 822 | Multi-Trunk Oak | 16, 15 | | X | |
| 823 | Oak Cluster | 18, 14 | | X | |
| 824 | Oak Cluster | 16, 18 | | X | |
| 825 | Oak Cluster | 8, 10, 12 16 | | X | |
| 826 | Oak Cluster | 11, 14 | | X | |
| 827 | Oak Cluster | 14, 14, 19 | | X | |
| 828 | Multi-Trunk Oak | 13, 8 | | X | |
| 829 | Oak | 19 | | X | |
| 830 | Oak Cluster | 6, 6, 7, 9, 8, 8 | | X | |
| 831 | Multi-Trunk Oak | 12, 12 | X | | |
| 832 | Oak Cluster | 6, 6, 7, 7, 8, 8, 8, 7 | | X | |
| 833 | Oak | 24 | | X | |
| 834 | Oak Cluster | 6, 8, 9, 9, 11 | | X | |
| 835 | Oak | 14 | | X | |
| 836 | Oak Cluster | 6, 9, 9, 14 | | X | |
| 837 | Oak Cluster | 6, 9, 9, 10 | | X | |
| 838 | Oak Cluster | 6, 7, 9, 9 | | X | |
| 839 | Oak | 12 | | X | |
| 840 | Oak | 13 | X | | |
| 841 | Multi-Trunk Oak | 12, 14 | X | | |
| 842 | Oak | 12 | X | | |
| 843 | Oak | 10 | X | | |
| 844 | Oak Cluster | 10, 10 | X | | |
| 845 | Oak Cluster | 9, 9, 12, 12, 17 | X | | |
| 846 | Multi-Trunk Oak | 6, 7 | X | | |
| 847 | Oak Cluster | 6, 15 | | X | |
| 848 | Multi-Trunk Oak | 13, 16, 20, 18 | | X | |

**Please Note: Multiple breast height dimensions represent the number of trunks on tree**

**Shaded tag numbered rows represent trees that were located on the propery line and tree count was split (shared) between property owners.**

| Tree Tag # | Tree Species | Dimension at Breast Height (inches) | Remain | Cut/Remove | Trim |
|---|---|---|---|---|---|
| 849 | Oak | 6 | X | | |
| 850 | Oak | 23 | X | | |
| 851 | Multi-Trunk Oak | 16, 18 | X | | |
| 852 | Oak | 14 | X | | |
| 853 | Oak Cluster | 6, 7, 11, 12, 13 | X | | |
| 854 | Multi-Trunk Oak | 11, 9 | X | | |
| 855 | Oak | 11 | X | | |
| 856 | Oak Cluster | 6, 6, 7, 8 | X | | |
| 857 | Multi-Trunk Oak | 9, 10 | | X | |
| 858 | Multi-Trunk Oak | 14, 13, 12, 10, 17 | X | | |
| 859 | Oak Cluster | 8, 8, 8, 10, 13, 18 | X | | |
| 860 | Oak Cluster | 6, 9, 10, 7, 8, 12 | X | | |
| 861 | Oak | 22 | X | | |
| 862 | Oak | 13 | | X | |
| 863 | Oak Cluster | 6, 7, 12, 10, 13, 15, 8, 8, 7 | | X | |
| 864 | Oak Cluster | 8, 9, 11, 13 | | X | |
| 865 | Oak Cluster | 9, 13, 11, 9 | | X | |
| 866 | Oak Cluster | 7, 8, 9, 11, 12, 8 | | X | |
| 867 | Multi-Trunk Oak | 11. 13, 13 | | X | |
| 868 | Multi-Trunk Oak | 14, 8 | | X | |
| 869 | Multi-Trunk Oak | 17, 19 | | X | |
| 870 | Multi-Trunk Oak | 7, 13, 24 | | X | |
| 871 | Oak | 21 | | X | |
| 872 | Oak | 21 | X | | |
| 873 | Multi-Trunk Oak | 10, 12, 15, 16, 15, 12, 7, 11 | | X | |
| 874 | Multi-Trunk Oak | 10, 14, 18 | | X | |
| 875 | Multi-Trunk Oak | 7, 7, 8, 13, 10 | | X | |
| 876 | Multi-Trunk Oak | 7, 6, 10, 14, 9, 8, 8, 9, 7 | | X | |
| 877 | Oak | 7 | | X | |
| 878 | Oak | 13 | | X | |
| 879 | Oak | 7 | | X | |
| 880 | Multi-Trunk Oak | 12, 14, 15 | | X | |
| 881 | Oak | 24 | | X | |
| 882 | Multi-Trunk Oak | 9, 15 | | X | |
| 883 | Oak | 15 | | X | |
| 884 | Multi-Trunk Oak | 17, 17 | | X | |
| 885 | Multi-Trunk Oak | 8, 13 | | X | |

**Please Note: Multiple breast height dimensions represent the number of trunks on tree**

**Shaded tag numbered rows represent trees that were located on the propery line and tree count was split (shared) between property owners.**

THIS PLAN ACCURATE FOR TREE REMOVAL WORK ONLY.

# TREE REMOVAL LIST

## TR-18

REVISED BY | DATE REVISED

T.T., D.L., D.S. | B.G.

CALCULATED-DESIGNED BY | CHECKED BY

CONSULTANT FUNCTIONAL SUPERVISOR | K.G.M.

STATE OF CALIFORNIA - DEPARTMENT OF TRANSPORTATION

Caltrans

LAST REVISION 07-16-10 | DATE PLOTTED => $DATE | TIME PLOTTED => $TIME

| Dist | COUNTY | ROUTE | POST MILES TOTAL PROJECT | SHEET No. | TOTAL SHEETS |
|---|---|---|---|---|---|
| 05 | SLO | 101 | 5.9/6.9 | 289 | 290 |

REGISTERED CIVIL ENGINEER — DATE 07/16/10

PLANS APPROVAL DATE

REGISTERED PROFESSIONAL ENGINEER — Bo Gao — No. C59985 — Exp. 6/30/12 — CIVIL — STATE OF CALIFORNIA

*THE STATE OF CALIFORNIA OR ITS OFFICERS OR AGENTS OR COUNTY SHALL NOT BE RESPONSIBLE FOR THE ACCURACY OR COMPLETENESS OF SCANNED COPIES OF THIS PLAN SHEET.*

RAJAPPAN & MEYER
CONSULTING ENGINEERS INC .
1038 LEIGH AVE . SUITE 100
SAN JOSE , CA 95126

COUNTY OF SAN LUIS OBISPO
DEPARTMENT OF PUBLIC WORKS
1050 MONTEREY STREET
SAN LUIS OBISPO, CA 93408

FOR NOTES, ABBREVIATIONS, AND LEGEND, SEE SHEET TR-1.

| Tree Tag # | Tree Species | Dimension at Breast Height (inches) | Remain | Cut/Remove | Trim |
|---|---|---|---|---|---|
| 886 | Oak | 22 | | X | |
| 887 | Oak | 30 | | X | |
| 888 | Oak | 24 | | X | |
| 889 | Oak Cluster | 13, 10, 15, 12, 10 | | X | |
| 890 | Multi-Trunk Oak | 10, 15 | | X | |
| 891 | Multi-Trunk Oak | 13, 18, 18 | | X | |
| 892 | Multi-Trunk Oak | 10, 14 | | X | |
| 893 | Multi-Trunk Oak | 10, 10, 7, 10, 10 | | X | |
| 894 | Multi-Trunk Oak | 14, 15 16, 19 | | X | |
| 895 | Multi-Trunk Oak | 13, 15, 13, 8, 8 | | X | |
| 896 | Oak | 10 | | X | |
| 897 | Multi-Trunk Oak | 18, 29 | | X | |
| 898 | Multi-Trunk Oak | 12, 15, 9 | | X | |
| 899 | Oak | 9 | | X | |
| 900 | Multi-Trunk Oak | 12, 21 | | X | |
| 901 | Multi-Trunk Oak | 10, 14 | | X | |
| 902 | Oak | 12 | | X | |
| 903 | Multi-Trunk Oak | 15, 13, 15, 30 | | X | |
| 904 | Oak | 20 | | X | |
| 905 | Oak | 20 | X | | |
| 906 | Oak | 13, 15 | X | | |
| 907 | Multi-Trunk Oak | 6, 8, 12, 10, 22, 13, 28 | | X | |
| 908 | Multi-Trunk Oak | 6, 8, 12, 8 | | X | |
| 909 | Multi-Trunk Oak | 6, 6, 7, 9, 10, 12, 8 | | X | |
| 910 | Multi-Trunk Oak | 6, 7, 8, 8 | | X | |
| 911 | Multi-Trunk Oak | 7, 11 | | X | |
| 912 | Multi-Trunk Oak | 26, 14, 19 | X | | |
| 913 | Oak | 20 | | X | |
| 914 | Oak | 24 | | X | |
| 915 | Multi-Trunk Oak | 10, 11 | | X | |
| 916 | Multi-Trunk Oak | 11, 12, 6, 13 (possibly dead)? | | X | |
| 917 | Multi-Trunk Oak | 15, 17, 26 | | X | |
| 918 | Multi-Trunk Oak | 7, 14, 16 | | X | |
| 919 | Oak | 25 | | X | |
| 920 | Oak | 13 | | X | |
| 921 | Oak | 17 | X | | |
| 922 | Oak | 30 | X | | |

**Please Note: Multiple breast height dimensions represent the number of trunks on tree**

**Shaded tag numbered rows represent trees that were located on the propery line and tree count was split (shared) between property owners.**

| Tree Tag # | Tree Species | Dimension at Breast Height (inches) | Remain | Cut/Remove | Trim |
|---|---|---|---|---|---|
| 923 | Oak | 27 | X | | |
| 924 | Multi-Trunk Oak | 6, 13 | X | | |
| 925 | Oak | 17 | X | | |
| 926 | Oak | 10 | | | X |
| 927 | Multi-Trunk Oak | 13, 16 | X | | |
| 928 | Oak | 13 | | X | |
| 929 | Oak | 24 | | X | |
| 930 | Multi-Trunk Oak | 36, 15 | | X | |
| 931 | Oak | 13 | | X | |
| 932 | Oak | 29 | X | | |
| 933 | Oak | 13 | | X | |
| 934 | Oak | 9 | | X | |
| 935 | Oak | 19 | | X | |
| 936 | Multi-Trunk Oak | 6, 7, 7 | | X | |
| 937 | Oak | 22 | | X | |
| 938 | Oak | 6 | | X | |
| 939 | Oak | 50 | | X | |
| 940 | Oak | 24 | | X | |
| 941 | Oak | 38 | | X | |
| 942 | Oak | 18 | | X | |
| 943 | Multi-Trunk Oak | 30, 41 | X | | |
| 944 | Oak | 44 | | X | |
| 945 | Multi-Trunk Oak | 13, 13, 13, 13, 16 | X | | |
| 946 | Oak Cluster | 14, 26 | | X | |
| 947 | Multi-Trunk Oak | 18, 18 | | X | |
| 948 | Oak | 7 | | X | |
| 949 | Multi-Trunk Oak | 9, 9 | | X | |
| 950 | Oak | 7 | | X | |
| 951 | Multi-Trunk Oak | 9, 14 | | X | |
| 952 | Oak | 23 | | X | |
| 953 | Oak | 20 | | X | |
| 954 | Oak | 16 | | X | |
| 955 | Oak | 24 | | X | |
| 956 | Oak | 11 | | X | |
| 957 | Oak | 10 | | X | |
| 958 | Oak | 10 | | X | |
| 959 | Oak | 15 | | X | |

**Please Note: Multiple breast height dimensions represent the number of trunks on tree**

**Shaded tag numbered rows represent trees that were located on the propery line and tree count was split (shared) between property owners.**

THIS PLAN ACCURATE FOR TREE REMOVAL WORK ONLY.

# TREE REMOVAL LIST

## TR-19

REVISED BY | DATE REVISED

T.T., D.L., D.S. | B.G.

CALCULATED-DESIGNED BY | CHECKED BY

CONSULTANT FUNCTIONAL SUPERVISOR | K.G.M.

STATE OF CALIFORNIA - DEPARTMENT OF TRANSPORTATION

Caltrans

LAST REVISION 07-16-10 | DATE PLOTTED => $DATE | TIME PLOTTED => $TIME

| Dist | COUNTY | ROUTE | POST MILES TOTAL PROJECT | SHEET No. | TOTAL SHEETS |
|---|---|---|---|---|---|
| 05 | SLO | 101 | 5.9/6.9 | 290 | 290 |

REGISTERED CIVIL ENGINEER — DATE 07/16/10

PLANS APPROVAL DATE

REGISTERED PROFESSIONAL ENGINEER — Bo Gao — No. C59985 — Exp. 6/30/12 — CIVIL — STATE OF CALIFORNIA

*THE STATE OF CALIFORNIA OR ITS OFFICERS OR AGENTS OR COUNTY SHALL NOT BE RESPONSIBLE FOR THE ACCURACY OR COMPLETENESS OF SCANNED COPIES OF THIS PLAN SHEET.*

RAJAPPAN & MEYER
CONSULTING ENGINEERS INC .
1038 LEIGH AVE . SUITE 100
SAN JOSE , CA 95126

COUNTY OF SAN LUIS OBISPO
DEPARTMENT OF PUBLIC WORKS
1050 MONTEREY STREET
SAN LUIS OBISPO, CA 93408

FOR NOTES, ABBREVIATIONS, AND LEGEND, SEE SHEET TR-1.

| Tree Tag # | Tree Species | Dimension at Breast Height (inches) | Remain | Cut/Remove | Trim |
|---|---|---|---|---|---|
| 960 | Oak | 17 | | X | |
| 961 | Oak | 19 | | X | |
| 962 | Oak | 9 | | X | |
| 963 | Multi-Trunk Oak | 6, 10, 14 | | X | |
| 964 | Oak | 10 | | X | |
| 965 | Multi-Trunk Oak | 7, 7, 6, 6 | | X | |
| 966 | Oak | 27 | | X | |
| 967 | Multi-Trunk Oak | 12, 16, 16, 25 | | X | |
| 968 | Multi-Trunk Oak | 6, 7, 10, 9, 11 | | X | |
| 969 | Oak | 6 | | X | |
| 970 | Oak | 30 | | X | |
| 971 | Oak | 6 | | X | |
| 972 | Oak | 32 | | X | |
| 973 | Oak | 29 | | X | |
| 974 | Oak | 24 | X | | |
| 975 | Multi-Trunk Oak | 11, 14 | | X | |
| 976 | Oak Cluster | 7, 14 | | X | |
| 977 | Oak | 24 | | X | |
| 978 | Oak Cluster | 7, 6, 6 | | X | |
| 979 | Oak | 26 | | X | |
| 980 | Multi-Trunk Oak | 6, 11, 1, 17, 18, 12 | X | | |
| 981 | Elderberry Cluster | 10, 10, 10, 10, 12, 12, 12, 14, 12 | | X | |
| 982 | Multi-Trunk Pepper | 12, 10, 13 | | X | |
| 983 | Multi-Trunk Pepper | 9, 19 | | X | |
| 984 | Dead Pepper | 36 | | X | |
| 985 | Dead Pepper | 35 | | X | |
| 986 | Multi-Trunk Pepper | 24, 16, 10, 16 | | X | |
| 987 | Multi-Trunk Pepper | 8, 13 | | X | |
| 988 | Multi-Trunk Pepper | 12, 7, 8, 13 | | X | |
| 989 | Multi-Trunk Pepper | 7, 11, 14 | | X | |
| 990 | Multi-Trunk Pepper | 6, 11, 24 | | X | |
| 991 | Pine | 13 | | X | |
| 992 | Multi-Trunk Pepper | 11, 14 | | X | |

**Please Note: Multiple breast height dimensions represent the number of trunks on tree**

**Shaded tag numbered rows represent trees that were located on the propery line and tree count was split (shared) between property owners.**

| Tree Species | # of Trees |
|---|---|
| Oak Trees | 1282 |
| Pepper | 33 |
| Pine | 3 |
| Willow | 2 |
| Acacia | 4 |
| Cypress | 2 |
| Elderberry | 9 |
| | |
| ***TREE TOTAL*** | ***1335*** |

**Oak Tree Count Per Property:**

| | | |
|---|---|---|
| APN #091-301-045 | (Hermreck Group) | 70 |
| APN #091-301-046 | (Nipomo Group) | 329 |
| APN #091-301-028 | (Ponce) | 163 |
| APN #091-301-021 | (Universal Life Church) | 465 |
| APN #091-301-041 | (Canada-West) | 22 |
| APN #091-301-033 | (Cavaletto) | 2 |
| APN #091-251-016 | (Heather Mehlschan) | 6 |
| APN #091-251-017 | (Charles Mehlschan) | 156 |
| US Hwy 101 | | 67 |
| ***Total Oak Tree Count*** | | ***1280*** |

**Oak Tree Count Remain/Remove/Trim**

| | |
|---|---|
| Remain | 621 |
| Remove | 638 |
| Trim | 23 |
| ***Total Oak Tree Count*** | ***1282*** |

**Please Note: Multiple breast height dimensions represent the number of trunks on tree**

**Shaded tag numbered rows represent trees that were located on the propery line and tree count was split (shared) between property owners.**

THIS PLAN ACCURATE FOR TREE REMOVAL WORK ONLY.

# TREE REMOVAL LIST

## TR-20

STATE OF CALIFORNIA – DEPARTMENT OF TRANSPORTATION — Caltrans

CONSULTANT FUNCTIONAL SUPERVISOR: K.G.M. | CALCULATED–DESIGNED BY: T.T., D.L., D.S. | CHECKED BY: B.G. | REVISED BY | DATE REVISED

LAST REVISION 07-16-10 | DATE PLOTTED => $DATE | TIME PLOTTED => $TIME