COUNTY OF SAN LUIS OBISPO HEALTH AGENCY
ENVIRONMENTAL HEALTH SERVICES DIVISION
2156 Sierra Way STE. B, San Luis Obispo, CA 93401
PO Box 1489, San Luis Obispo, CA 93406
Phone: (805) 781-5544 Fax: (805)781-4211
Email: ehs@co.slo.ca.us

NEW SWIMMING POOL PLAN APPROVAL REQUIREMENTS

This document contains requirements for submitting plans for a commercial pool in San Luis Obipso County. It also contains basic requirements of the California pool code. For more detailed and specific information please consult a copy of the California Building Code, Title 24 and California Code of Regulations, Title 22.

PLAN AND SPECIFICATION REQUIREMENTS

Any person proposing to construct, reconstruct, renovate, alter, relocate or replace a public pool or change its ancillary facilities, mechanical equipment or related piping, shall submit legible plans and specifications to the County of San Luis Obispo, Department of Public Health for review and written approval prior to commencing the work and in advance of the issuance of any building, plumbing, or electrical permits. A valid California State Contractors License in the appropriate field is required.

- A minimum of 3 complete sets of plans are required. This Department will retain one copy of the plans and specifications submitted for approval. Plans should include all items listed below.
- All equipment, materials, methods of construction, and design must be approved by this Department.
- All equipment shall be installed per manufacturer's instructions.
- Any changes in construction plans or equipment must be approved by this Department. Changes may require additional plan check fees and resubmittal of plans
- Pool plan approval does not authorize the violation of any law, ordinance, or regulation and final approval is subject to field inspection and evaluation.
- Plan approvals are valid for a period of two years from the date of the stamp.
- No pool shall be placed in operation without written approval of this Department.

CONSTRUCTION INSPECTIONS:

The pool owner, contractor or architect shall notify this Department for the following inspections:

1. Exposed plumbing and prior to guniting or applying pneumatically placed concrete;
2. Prior to plastering or applying the final surface to the pool shell;
3. At the completion of construction and any other inspections that may be required. No pool shall be opened to the public without the written approval of the enforcing agent.

ITEMS TO BE INCLUDED (missing items may delay plan approval)

1. Job Address and APN# - street number, city, zip code, APN
2. Name, mailing address and telephone numbers of pool contractor and owner.
3. Scaled drawings (see diagrams and illustration at back of requirements)
   A. Scale
      1. All pools other than spa pools, ¼ " = 1 ft. (top and profile view).
      2. Spa pools, ½ inch or 1 inch = 1 ft. (top and profile view).

   B. General Data
      1. Surface area in sq. ft.
      2. Volume or total pool capacity in gallons.
      3. Color of plaster or pool surface.

   C. Top View
      1. Dimensions (length, width)
      2. Suction and return line plumbing sizes and type of material. Include location of skimmer(s), split suction drain(s), equalizers, and return lines.
      3. Four to 6 inch wide, slip-resistant tiles, of contrasting color, along the bottom of the pool where the water depth is 4½ feet. (Pools with a maximum water depth of 5 feet or less do not require a marking line)
      4. Stairs, ladders, grab rails, handrails.
      5. Location of depth markers.
      6. Contrasting tile on stairs and benches of spas when used.

7. Fill line location.
8. Pool light location(s), wattage and type.
9. Emergency shut-off switch location for spa pools.
10. Diving board (if any) location and distance from board center to side walls or other diving boards. (top view and side view) (See the pool code for dimension requirements for pools with diving boards)

D. Profile View (longitudinal section)
1. Dimensions (length)
2. Depths at the shallow end wall, depths at any beginning or ending in breaks in slope and depth at the main drain. Indicate depth markers on the pool deck to match depth markers on the wall. If this pool has a maximum depth of 6 ft. or less, indicate no diving markers on the deck adjacent to all deck depth markers.
3. Stairs, with tread and riser dimensions.
4. Dimensions of handrails with distance above the deck and each step of the stair.
5. Sectional view of coping.
6. Water line tile (6”).
7. Diving board (if any) with distance diving board extends over the pool and depths below the diving board.

E. Plot Plan, Deck Details, and Pool Enclosure
1. Scaled plot plan showing pool location on property in relation to adjacent buildings.
2. Equipment room dimensions, ceiling elevation (at least 7’), placement of equipment, and location in relation to the pool.
3. Equipment room enclosure with lockable entrance.
4. Deck details.
   a. Pool location on deck.
   b. A minimum of 4 feet of unobstructed decking around pool (6 ft. between any two pools).
   c. Clearances from pool edge to pool enclosure and clearances outside of pool enclosure.
   d. Type of deck drainage, located at least 4 feet from coping.
   e. Deck material
   f. Hose bibb locations supplied with potable water within pool area and equipment room with approved backflow.
5. Pool enclosure details
   a. Show the pool with the proposed fence or building wall surrounding it.
   b. Show a scaled profile view of all fences, gates, and doors. Include latch hardware details. Must be self closing and self latching.
   c. Outline the entire enclosure with a yellow marker.

4. Bathroom Details: Note: Restrooms are required at the pool or adjacent to the pool. When restrooms are required, showers and drinking fountains are also required. At residential facilities when travel distance to the furthest living quarter is less than 300 ft. restrooms are not required.
   A. Separate restrooms for men and women. Urinal(s) required in men’s restroom.
   B. Smooth, moisture resistant wall finishes throughout.
   C. Floors must be concrete or similarly resilient surface extending upwards onto the walls at least 5" with an integrally coved junction and shall slope, ¼” per foot (2%), to floor drain(s).
   D. Shower(s) with adequate drainage and hot (not > 100°F) and cold water (when not available in adjacent living quarters).
   E. Hand lavatory with single-service soap and towel dispensers and hot and cold water.
   F. Toilets(s) and urinal(s).
   G. Drinking fountain in pool area (when drinking water is not available in adjacent living quarters).
   H. Separate locker/dressing facilities are required for all non-residential establishments.

5. Equipment List
   A. Filter: make and model number and square footage.
   B. Filtration pump: make model number and horsepower rating (include booster pumps for spas).
   C. Additional pumps: make model number and horsepower rating (spas, attraction pumps etc.).
   D. Skimmer(s): make model number.

E. Influent pressure gauge placed after the pump but before the filter (usually found on top of the filter).
F. A vacuum gauge before the pump.
G. Chlorinator and pH Regulating System: make and model
H. Chemical controller, make, model number (at a minimum, for pH and disinfection control)
I. Flowmeter: make, model number.
J. Backwash plumbing to sewer with air gap. Separation tank if required.
K. Fresh water fill line from a potable water source with approved backflow prevention device.
L. Suction drain covers / grates: make and model number
M. Emergency shut off switch for all spa pumps and blowers.
N. Solar heater system detail, if being installed.

6. SAFETY EQUIPMENT AND SIGNS
   A. Safety Signs (see no. 48 in requirements)
   B. Body hook attached to a pole at least 12 ft. in length.
   C. Life ring with rope attached. The rope must be as long as the width of the pool.
   D. Pool test kit, DPD type and pH.

REQUIREMENTS

1. All pool equipment shall be listed in the Los Angeles County Approved Pool Equipment List.

2. All swimming pools must be lined with white plaster or a smooth, waterproof, white interior finish, impervious to moisture and constructed of reinforced concrete or a material equivalent in strength and durability. There shall be no letters, marking or images of any kind other than safety markings on the pool shell. Tile used for lining within a pool or spa must be submitted to this Department for approval.

3. The maximum allowed water depth at the shallow end of a pool is 3½ ft. The water depth at the base of any portion of a stair must not exceed 3½ ft.

4. The minimum width of a swimming pool must be at least 15 feet wide, except for swimming pools with a maximum depth of 6 feet or less, the entire pool may be a minimum of 12 feet wide.

5. For swimming pools with a maximum depth of greater than 6 ft. and 15 feet wide at the deep end and 12 feet wide at the shallow end, the 15 ft. width must be at least 15 ft. long. Pools with curved shapes must have a minimum radius of at least 6 ft. at the shallow end and a minimum radius of at least 7½ ft. at the deep end.

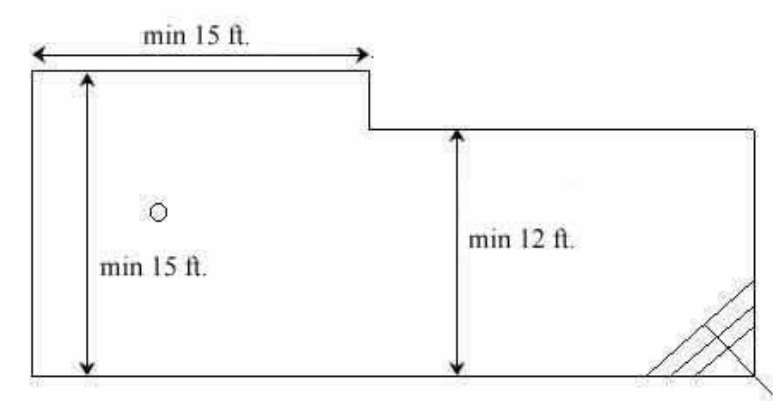

6. No recesses or projections are permitted in swimming pools. An area is not considered a recess or projection, and will be permitted, if it is 12 ft. or more in length in a pool with a maximum depth of 6 feet or less or 15 ft. or more in length in a swimming pool with a maximum depth greater than 6 feet. Swimouts, loveseats, baja steps and foot holds are prohibited.

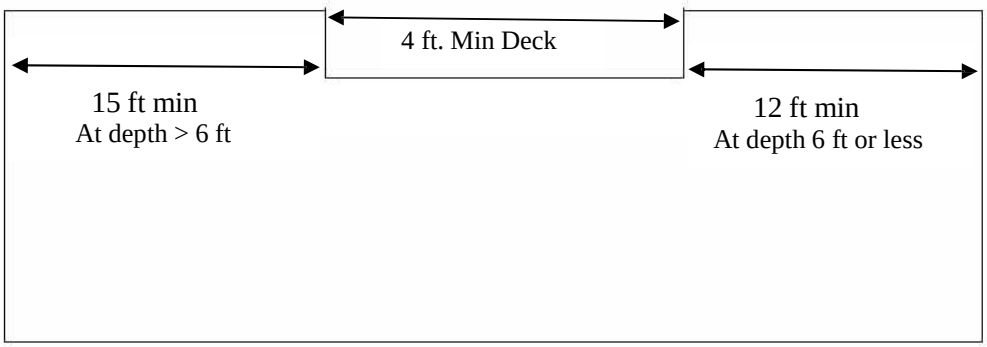

7. For "L" or irregularly shaped pools, the minimum width (12 ft. or 15 ft.), must be maintained for both sections of the "L."

8. For pools without diving boards, from the shallow end, to a depth of at least 4½ ft., the slope shall be no

greater than 1 ft. vertically in 10 ft. horizontally. For a minimum distance of 3 ft., from the break in slope at 4 ½ ft. the slope shall not exceed 1 in 3. For a minimum distance of 3 ft. from the end of the 1 in 3 slope to the main drain, the slope shall not exceed 1 in 6. The main drain shall be a minimum of 3½ ft. from the deep end wall. (See diagrams in at the end of the requirements.)

9. In pools greater than 5 ft. in depth, a straight line of slip-resistant tile of contrasting color must be installed on the bottom of the pool (not the walls) where the water depth is 4½ ft. The tile must be at least 4 inches but not greater than 6 inches wide.

10. Depth markers of contrasting color are required on both sides, at the minimum and maximum depths, at the break at 4 ½ ft. and both ends of the pool. Permanent depth markers are required on the pool deck, corresponding to every depth marker on the wall. All depth markers must be marked with the letters "feet" or "ft." and "inches" or "in". Painted letters are not permitted. Depth markers must be at least 4 inches in height and must be positioned to indicate the water depth accurate to the nearest 6 inches as measured from the pool floor to the middle of the skimmer opening. The pool must be lined with (6" wide) waterline tiles around the entire perimeter of the pool. Rim flow pools are permitted to have depth markers installed below the waterline. Waterline tiles must be contrasting in color to the white pool shell and be glossy smooth and easily cleanable.

11. A ladder as a second means of exit is required at the deep end or area of a pool having a water depth greater than 4½ feet, and on both sides if the pool width exceeds 30 feet.

12. Steps and step holds of ladders must have a minimum tread of 5 inches and minimum width of 14 inches. Grab railings must be provided at the top of both sides and extend over the coping or edge of the deck.

13. Stairs are required at the shallowest end of all pools greater than 1 ft. in depth to the deck. All pools with two shallow ends or any instance where the pool user will encounter a shallow, deep, and shallow configuration as he proceeds through the pool will be required to have stairs at one shallow end and a means of exit such as a ladder(s) at the other shallow end. Each step of a stair must have the same dimensions as described in No. 14 below.

14. All stairs must be at least 24 in. wide. All risers must be no greater than 12 inches high. The top riser is considered that distance from the deck or coping, down to the first tread of the stair and the deck thickness/coping should be taken into consideration. The first tread below the deck must be at least 14 inches but not greater than 18 inches wide. The remaining treads must be 12 inches but not greater than 16 inches wide. If the top tread is convexly or triangularly shaped, it must have a radius of a minimum of 21 inches but not greater than 24inches. All treads except for the top tread must be uniform.

15. At least one hand rail is required for all stairs, except for a spa, two handrails are required. The rail must be between 28 inches and 36 inches above the deck and above each step tread as measured from a flat portion of the deck and the edge of each step tread to the top of the handrail. The handrail must extend into the pool, from the deck to the bottom step tread, but shall not extend beyond the bottom step. There should be a minimum clearance of 3 inches between any handrail and step riser. The handrail may not extend onto the deck more than 2-2 ½ feet or obstruct the deck unnecessarily. (See handrail illustration at the end of the requirements).

16. All coping on pools must extend out into the pool at least one inch but not more than two inches. The coping must be at least 1 inch thick but no greater than 2½ inches thick. The handhold of the coping shall be no greater than 9 inches above the waterline. All coping or cantilevered decking must be sloped at 1/4 inch per foot away from the pool. Standard bull-nosed coping may be installed horizontally since its edge flares up and prevents water from entering the pool. Handholds are required around the entire perimeter of the pool. The enforcing agent will require C-701 type of handhold for rim flow and fiberglass spa pools. (See coping illustration at back of the requirements)

17. A minimum 4 ft. wide, continuous, slip-resistant, non-abrasive deck area of concrete or concrete like material must be provided flush with the top of the pool and extend completely around the pool. Deck material other

than concrete must be approved by this Department. Wood decking or indoor-outdoor carpeting is not permitted. Deck measurements are made from the coping edge. The required decking around a pool, must be free of all posts, columns, or other obstructions and extend at least 4 ft. behind any diving board, slide, or permanent handicapped equipment. There cannot be any changes in the deck elevation around the pool. All parts of the deck must drain naturally or to floor drains at a slope between 1% and 2% with no accumulations of water. The space between the coping and the deck must be sealed with an appropriate caulking. There must be a minimum distance of 6 feet between any two pools.

18. Separate men's and women's public toilet facilities are required at the pool, except when living quarters of the farthest pool user is less than 300 ft. travel distance from the pool. Urinal(s) are required in the men's restroom. Vertical distances between floors should be included when calculating the distance. When restrooms and shower facilities are required, they must be at the pool or adjacent to the pool area and located not more than 100 ft. walking distance away and be easily accessible by pool users. If two pools are located on the same property and all living units are within 300 ft. walking distance to either pool, no bathroom facilities are required. If restroom and shower facilities are not required, the facilities need not comply with the swimming pool code in regards to separate men's and women's facilities, urinals, and floor drains, but must be constructed so as to be readily cleanable and comply with Building and Safety Department requirements.

19. For the purpose of calculating the number of showers, toilets and lavatories, one bather shall be considered for every 15 sq. ft. of pool surface area.
    - One shower with hot and cold water must be provided for every 50 pool users.
    - One lavatory with hot and cold water must be provided for every 80 pool users.
    - Separate toilet facilities must be provided for each sex. One toilet must be provided for every 60 women and one toilet and one urinal for every 75 men.
    - One guarded jet drinking fountain shall be provided for the first 250 bathers and an additional fountain shall be provided for each additional 200 bathers or fraction thereof.

20. Shower and dressing facilities must be provided for users of a pool unless such facilities are available in adjacent living quarters.

21. Each pool must be provided with a separate recirculation, treatment system, and equipment.

22 Each pump located on any type of pool shall be plumbed with at least two suction outlets. Suction outlets shall be separated by a distance of at least 3 feet, measured from the center of one suction pipe to the other. The suction drains must be plumbed with a "T" in the center that is hydraulically balanced. Each branch of the "T" must be the same size or larger than the main suction plumbing.

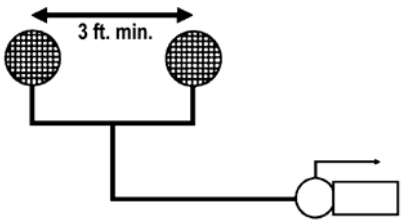

Dual Outlets

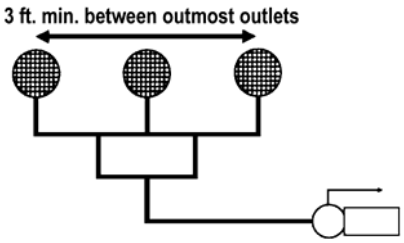

Three Outlets

23. In spa pools where room on the floor precludes both suction outlets from being on the floor, one suction outlet can be located on a wall or different design plane as long as the suction outlets are offset and separated by 3 ft. and the one on the wall's drain cover is within 3 in. of the floor. At least one filtration suction must be located on the floor.

24. Each suction cover of a split drain must be the same. The flow rating of each cover/grate shall be equal to or greater than the flow rating of the pump it is connected to. For example, if a pump is rated at 80 gpm at 60 feet of head, each cover/grate of the split suction must be rated at 80 gpm or greater. If 3 or more suction outlets are used, refer to the table below.

Number of covers/grates per system	Minimum flow rating of each cover/grate % maximum system flow rate
2	100%
3	66.7%
4	50%
5	40%
6	33.3%

25. Each branch of a split suction shall terminate under its own suction outlet. Except suction plumbing from two different pumps may terminate at one suction outlet, provided the combined flow rate of each pipe is less than the flow rating of the cover/grate. See chart above and diagram below.

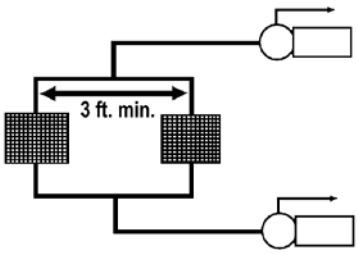

26. Split suctions must be plumbed so they are hydraulically balanced. See diagram below.

Correctly plumbed

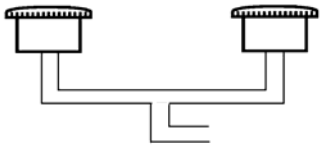

Incorrectly plumbed

27. A main drain connected directly to a skimmer requires a split main drain.

28. Fasteners for suction fittings shall be designed so that tools are required for disassembly. Standard slotted screw drivers shall not be permitted for affixing covers to the suction fitting body. Fasteners shall be corrosion resistant and equivalent to grade 316 stainless steel.

29. If the drain cover/grate is not part of a pre-manufactured sump, and is placed on a field-built sump, the sump must comply with the following dimensions.

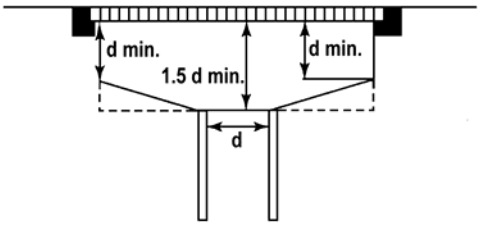

d= inside pipe diameter

30. The recirculation system shall have the capacity to provide a complete turnover of pool water in:
    1. One-half hour or less for a spa pool;
    2. One-half hour or less for a spray ground;
    3. One hour or less for a wading pool;
    4. Two hours or less for a medical pool;
    5. Six hours of less for other types of public pools

31. There shall be a minimum of one skimmer for every 500 square feet or less of pool water surface area or an adequate number to meet 100% of pump flow at the manufacturer's maximum flow rating, whichever is greater. A typical skimmer is rated at a maximum of 55-75 gpm.

    Skimmers must meet the following requirements:
    - Skimmers shall be built into the wall.
    - Skimmers shall be individually adjustable.
    - Skimmers shall have an air-lock protective device which will prevent leakage of air into recirculation system.
    - Each skimmer shall have a cleanable screen or basket, removable from an opening on the deck.
    - If an equalizer is required, it must have an equalizer valve, be split at least 3 ft. apart, have approved covers, and be located at least 18" below the waterline.
    - Whenever an equalizer is required, a split equalizer is required. A split equalizer is required anytime the skimmer is not connected to a main drain.

32. Two return lines are required for the first 10,000 gallons and one return line for each additional 10,000 gallons. Return line inlets must be located at least 18" below the water line, except for spas and wading pools. For pools exceeding 40 ft. in width, or greater than 3,000 sq. ft. in surface area, bottom floor return lines are required.

33. Filters must be sized according to the following:

Diatomaceous Earth	2	GPM/sq.ft.
Rapid Sand	3	GPM/sq.ft.
High Rate Sand	15 - 20	GPM/sq.ft. (see rating in equipment list)
Cartridge	.375	GPM/sq.ft.

34. An influent pressure gauge placed <u>before the filter</u> but <u>after the pump</u> (usually found on top of the filter). An effluent pressure gauge is no longer required.

35. A vacuum gauge placed <u>before the pump</u>.

36. A flowmeter must be installed on a horizontal straight run of pipe with a minimum of 5 pipe diameters before and 2 pipe diameters after the flowmeter. It should be positioned after the filter and before the heater. It may be installed after the heater, if a great enough distance can be maintained so that heated water will not damage the flowmeter.

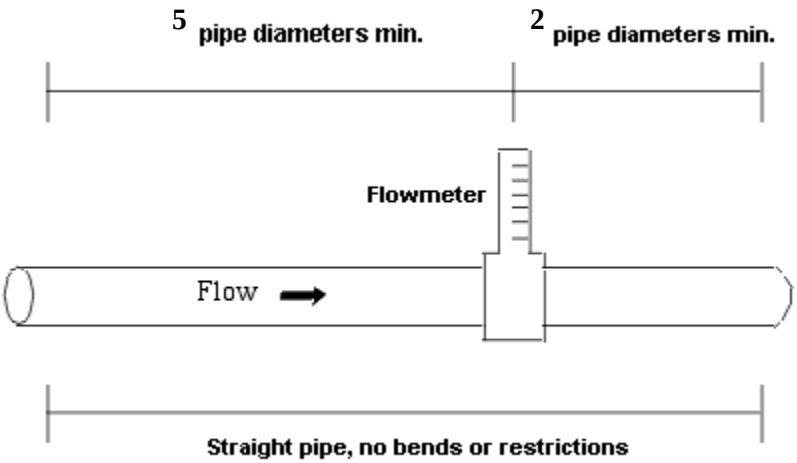

37. An automatic chlorinator is required which is capable of supplying

not less than the equivalent of 3 pounds of chlorine per day per 10,000 gallons pool water capacity.

38. A chemical controller is required to monitor and control the pH and disinfectant levels.

39. Diatomaceous earth or similar media filters must be permanently plumbed to a p-trap with a fixed air gap and have a separation tank. Sand filters must be permanently plumbed to a p-trap with a fixed air gap. Cartridge filters must have an area set aside with a hose bibb and floor drain to clean the filter. An extra cartridge filter is required to be available at the pool site. No direct connection of a pool or its recirculating system shall be permitted with a sanitary sewer, storm drain, or deck drain system. A sight glass is required when needed for observation of backwash water.

40. The water velocity in all suction line plumbing shall not exceed 6 feet per second and in all return lines water velocity shall not exceed 8 feet per second.

41. Each pool must be provided with a split bottom drain by which the pool can be emptied.

42. A permanently installed automatic fill line supplied by a potable water source and protected by an approved backflow device is required. The following backflow devices are required on fill lines of all pools and spas:
    - Automatic fill lines - a pressure vacuum breaker.
    - Fill lines connected to a filtration suction, return line, any pressurized line, or to equipment located below pool level - a reduced pressure (RP) principle backflow prevention device.

43. An adequate number of hose bibbs are required in the pool area in sufficient numbers to allow a 75 ft. hose to reach all areas of the pool deck. A hose bibb is required in the equipment area. Each hose bibb must be protected by an approved backflow device.

44. An underwater white incandescent light is required in a swimming pool or spa. The light must be at least 0.5 watts per square foot of pool or spa surface area. If other types of lighting are used, such as fiber optic, fluorescent, halogen, or LED, their equivalency to incandescent lighting must be demonstrated.

45. The pool shall be enclosed by one or a combination of the following: a fence; portion of a building; wall; or other approved durable enclosure. Doors, openable windows, gates of living units or associated private premises shall not be permitted as part of the pool enclosure. The enclosure, doors and gates shall meet all of the following specifications:
    1. The enclosure shall have a minimum effective perpendicular height of 5 feet as measured from the outside.
    2. Openings, holes or gaps in the enclosure, doors and/or gates shall not allow the passage of a 4-inch diameter sphere. The enclosure shall be constructed over a hard and permanent material equivalent to concrete.
    3. The enclosure shall be designed and constructed so that it cannot be readily climbed by small children. Horizontal and diagonal member designs which might serve as a ladder for small children are prohibited. Horizontal members shall be spaced at least 48 inches apart. No planters or other structures that can be climbed shall be permitted within 5 feet of the outside of the pool enclosure or within a 5 foot arc.
       The area 5 feet outside of the pool enclosure shall be a common area open to the public.
    4. Chain link may be used provided that the openings are not greater than 1¾ inches measured horizontally.
    5. The 5’ areas outside the enclosure must be public areas, open to all patrons of the pool. Meeting rooms and other non-pool user rooms may not open directly onto the pool deck.
    6. There shall be a 5’ clear radius outside of the fence enclosure with no trees, lamp posts, or any object that can be climbed.
    7. The enclosure cannot adjoin a private property. There must be a 5’ clearance from adjacent properties.
    8. All non-pool user amenities such as, but not limited to, fire pits, dance floors, and bars, shall not be located within the pool enclosure. The deck and ancillary facilities shall be designed and intended to be used by pool users as defined as those engaged in water activity such as diving, swimming, or wading, or watching those engaged in water activity.

Gates and doors opening into the pool enclosure also shall meet the following specifications:

1. Gates and doors shall be equipped with self closing and self latching devices. The self latching device shall keep the gate or door securely closed. Gates and doors shall open outwardly away from the pool except where otherwise prohibited by law. Hand activated door or gate opening hardware shall be located at a height no lower than 42 inches but no higher than 44 inches above the deck or walkway;
2. Gates and doors shall be capable of being locked during times when the pool is closed. Exit doors which comply with Chapter 10, Title 24, California Code of Regulations shall be considered as meeting these requirements.
3. The pool enclosure shall have at least one means of egress without a key for emergency purposes. Unless all gates or doors are so equipped, those gates and/or doors which will allow egress without a key shall have a sign in letters at least 4 inches high stating EMERGENCY EXIT.
4. The enclosure shall be constructed so that all persons will be required to pass through common pool enclosure gates or doors in order to gain access to the pool area. All gates and doors exiting the pool area shall open into a walkway or public area accessible by all patrons of the pool. Adjacent rooms such as meeting rooms, recreation rooms, fitness room, etc., shall not open directly into the pool area nor shall openable windows be permitted.

46. Supplemental heat transfer systems for pools or spas must not interfere with the proper functioning of the recirculation system or reduce the filtration rate below the required minimum. Heat exchangers must be installed according to requirements in the California plumbing code.

47. A body hook with a pole at least 12 ft. in length is required (not required for wading pools and spas). For public pools that exceed 75 feet in length or 50 feet in width, the pool operator shall provide a rescue pole and a life ring on at least two opposing sides of the public pool at centralized locations.

48. A life ring with rope attached is required. The rope must be as long as the, maximum width of the pool (wading pools and spas exempt). For public pools that exceed 75 feet in length or 50 feet in width, the pool operator shall provide a rescue pole and a life ring on at least two opposing sides of the public pool at centralized locations.

49. REQUIRED SIGNS. All signs shall have clearly legible letters or numbers not less than 4 inches high, unless otherwise noted, fixed to a wall, pole, gate or similar permanent structure in a location visible to all pool users.
    1. POOL CAPACITY SIGN - A sign shall indicate the maximum number of pool users permitted for each pool. [In letters and numbers not less than 4 inches high]. The pool user capacity of a spa pool shall be based one pool user for every 10 square feet of pool water surface area. The pool user capacity for all other pools shall be based on one pool user for every 20 square feet of pool water surface area. Pool user capacity requirements do not apply to wading pools or spray grounds
    2. NO DIVING SIGN. Signs shall be posted in conspicuous places and shall state, “NO DIVING” at pools with a maximum water depth of 6 feet or less. [In letters not less than 4 inches high].
    3. NO LIFEGUARD SIGN - Where no lifeguard service is provided, a sign shall be posted stating, “NO LIFEGUARD ON DUTY.” [In letters not less than 4 inches high].
       The sign also shall state [in letters not less than 1 inch high], "Children Under the Age of 14 Shall Not Use Pool Without A Parent or Adult Guardian In Attendance.”
    4. ARTIFICIAL RESPIRATION AND CARDIOPULMONARY RESUSCITATION SIGN - An illustrated diagram with text [not less than 1/4 inch high] of artificial respiration and CPR procedures shall be posted.
    5. EMERGENCY SIGN - The emergency telephone number 911, the number of the nearest emergency services and the name and street address of the pool facility shall be posted. [In letters and numbers not less than 1 inch high].
    6. SPA WARNING SIGN - A warning sign for spa pools shall be posted stating, “CAUTION” and shall include the following language [in letters not less than 1 inch high]:
       a. Elderly persons, pregnant women, infants and those with health conditions requiring medical care should consult with a physician before entering the spa.
       b. Unsupervised use by children under the age of 14 is prohibited.
       c. Hot water immersion while under the influence of alcohol, narcotics, drugs or medicines may lead to serious consequences and is not recommended.

d. Do not use alone.
e. Long exposure may result in hyperthermia, nausea, dizziness or fainting.

7. EMERGENCY SHUT-OFF SWITCH SIGN – [In letters not less than 1 inch high], a sign shall be posted at the spa emergency shut off switch stating, “EMERGENCY SHUT-OFF SWITCH.”
8. KEEP CLOSED SIGN - A sign shall be posted on the exterior side of gates and doors leading into the pool enclosure area stating, “KEEP CLOSED” [In letters not less than 4 inches high].
9. DIARRHEA NOTICE SIGN - A sign [in letters not less than 1 inch high] and in a language or diagram that is clearly stated shall be posted at the entrance area of a public pool which states that persons having currently active diarrhea or who have had active diarrhea within the previous 14 days shall not be allowed to enter the pool water. This sign should be posted with all the other safety signs.

50. Floating type pool covers are limited to pools where there is constant supervision with a responsible person opening the pool and removing the cover and closing the pool each day. Floating type pool covers, permanently installed, and safety type pool covers must be submitted to this Department for approval, be ANSI approved, must not obstruct the deck in any way, and must not interfere with the coping requirements. Pool covers must be approved by this Department prior to use.

51. If contrasting tile is used along the edge of pool steps, it must be no greater than 4 inches wide and slip-resistant. Unglazed tile is considered slip-resistant.

52. The direction of flow for the recirculation equipment shall be labeled clearly with directional symbols such as arrows on all piping in the equipment area. Where the recirculation equipment for more than one pool is located on site, the equipment shall be marked as to which pool the system serves. Valves and plumbing lines shall be labeled clearly with the source or destination descriptions.

53. Beginning January 1, 2013 all equipment rooms/areas must have an enclosure that can be locked. A concrete slab is required with a floor drain.

ADDITIONAL REQUIREMENTS FOR SPAS

1. The water surface area of a spa must not exceed 250 sq. ft. and the water depth must not exceed 4 ft. The water depth over the benches must not exceed 24 inches.

2. All spas must have benches extending around the entire perimeter of the spa and have an aeration system sufficient to distribute aeration over the entire surface of the spa. Swim spas for general use are prohibited. In spas, because of size, where there is the possibility of someone swimming, the following sign may be required to be posted: "NO SWIMMING" - "It has been determined that swimming in elevated water temperatures may be hazardous to your health." There must be no abrupt changes in the height of spa benches. Any changes in spa bench elevation must not exceed a slope of 1:10. Medical spas <u>may</u> be exempt from some or all of the above requirements.

3. Spa benches must be a minimum of 12 inches but not more than 24 inches in width. The clearance between parallel benches in a spa must be at least 24 inches. The floors of spas are required to have a minimum length and width, or diameter of 24 inches.

4. A continuous unobstructed 4 ft. wide, slip-resistant, non-abrasive deck area of concrete or concrete like material must be provided flush with the top of the spa pool and extend around at least 50% of its perimeter. Spa steps must be located where the deck is at least 4 ft. wide. If the pool deck is raised more than 18” above ground level, it must have a protective railing extending around the entire perimeter, including areas not requiring a 4 ft. deck.

5. Landscape planters, flower beds, or similar unpaved areas shall not be located within 4 ft. of a spa pool <u>unless</u> such areas are behind a solid wall at least five feet in height as measured from the outside.

6. A spa pool aeration and/or hydro-jet system must be completely separate from its filtration system.

7. A return line will be required in a spa for each 50 gpm of designed filtration rate or fraction thereof (design rate means output of pump at 60 ft. of head). Example: if a spa has a required turnover rate of 78 gpm, it is required to have 2 return lines.

8. A spa pool must have a minimum of two depth markers. Slip-resistant depth markers are also required on the deck along with no diving tiles.

9. The maximum allowable water temperature of a spa shall be 104 degrees F.

10. Fiberglass or acrylic spas must be on this Departments approved equipment list. Only white or light pastel colors are permitted. A light color is defined as a color having a light reflectance value (LRV) of 55% or greater. Tile samples for tile spas must be submitted for slip-resistance and color approval.

12. Fiberglass spas with coping as part of the pool shell extending out onto the deck shall have the following dimensions:
    - The height shall be at least 1/2 inch but not more than 2 inches above the deck.
    - The width shall be at least 2 inches and not exceed 6 inches.
    - The width shall not be sloped and shall be slip-resistant. (see coping illustration at back of the requirements)

13. A <u>single</u> clearly labeled emergency (on/off type) shut off switch which is readily accessible and visible from the spa, and will shut off <u>all</u> filtration, booster, and blower pumps, is required.

14. For fiberglass spas, waterline tile around the entire perimeter of the pool is required.

15. Cold plunges are permitted under the following conditions:
    - The maximum size is 49 sq.ft. and the maximum depth is 4 ft.
    - The cold plunge must be built in conjunction with a hot spa.
    - The cold plunge must have a refrigeration system or other means to cool the water.
    - Recirculation system requirements must comply with hot spa standards.
    - A ladder and grab rail may be used in lieu of stairs.
    - Benches may be omitted.

ADDITIONAL REQUIREMENTS FOR GUTTER AND RIMFLOW POOL

1. A separate surge chamber is required.
2. Pool plans must be designed and approved by an engineer or architect with experience working on public pools.
3. A C-701 type handhold is required around the entire perimeter of a rim flow pool and the handhold shall not protrude into the pool.
4. The entire gutter must be accessible for cleaning. Rim flow pool gutter covers must be removable.

ADDITIONAL REQUIREMENTS FOR SOLAR HEATING

1. Solar panels and all components must meet NSF Standard 50.
2. Split suction outlets shall be located at the deepest section of the pool so that that covers are within 3 inches of the pool floor and shall be no closer than 5 feet to any inlet.

ADDITIONAL REQUIREMENTS FOR SPRAY GROUNDS

1. A minimum 4-foot wide walking surface shall extend around the perimeter of the splash zone of a spray ground.
2. The recirculation system shall be in operation at all times that the spray ground is open for use and shall have a minimum of four turnover cycles prior to opening for proper disinfection and filtration.
3. There shall be no standing water within the splash zone.
4. Nozzles that spray from the ground level shall be flush with the ground with openings no greater than ½ inch. Spray ground water features that extend above the ground must be clearly visible.
5. The splash zone shall be sloped so that only water from the spray ground water feature flows back to the surge basin. Areas adjacent to the splash zone shall be sloped away from the spray ground to deck drains or other surface water disposal systems.
6. All foggers and misters that produce finely atomized mists shall be supplied directly from a potable water source and not from the surge basin.
7. When multiple pumps are used the control systems for the spray ground water feature pump and recirculation system pump shall be electrically interconnected so that when the recirculation pump is off the spray ground water feature pump also is off.
8. The spray ground shall have a surge basin or treatment tank constructed of materials which are inert, corrosion resistant, nontoxic and watertight including materials such as concrete, fiberglass, high density polyethylene, stainless steel or other materials as approved by the enforcing agent which can withstand all anticipated loadings under full and empty conditions as determined by an engineer or architect who has experience working on public pools.
9. The total volume of the surge basin shall be at least 4,000 gallons or a minimum of three times the gallons per minute flow rate of all the spray ground pumps and the recirculation pump combined, whichever is higher.
10. The turnover time shall be one-half hour or less.
11. The suction intake for the spray ground or water feature pump in the surge basin shall be located adjacent to the recirculation return line.
12. When separate pumps are used, the suction intake for the recirculation pump shall be located in the lowest portion of the surge basin and on the opposite side from the suction intake for the spray ground pump.
13. The surge basin shall be designed to have easy access for cleaning and inspection. The basin shall have at least one ladder access and shall have at least one 3-foot by 3-foot access opening. Lids shall be locked or require a tool to open.
14. The surge basin shall be equipped with an automatic make up water fill device through an air gap or be protected by an approved backflow prevention device in accordance with Chapter 6 of the California Plumbing Code.
15. Ultraviolet light disinfection shall be used to supplement disinfection methods required in this chapter unless another treatment process is provided that has been determined by a nationally recognized testing laboratory to be capable of providing at least the equivalent level of reduction of cryptosporidium as the ultraviolet light disinfection system. The ultraviolet light disinfection unit shall comply with the applicable requirements established by the NSF/ANSI 50-2010 performance standard effective August 2010.
16. An accurately calibrated ultraviolet light intensity meter that has been properly filtered to restrict its sensitivity to the disinfection spectrum shall be installed in the wall of the disinfection chamber at the point of greatest water depth from the light source.
17. The ultraviolet light unit shall be located on the recirculation system and shall be installed to provide treated water directly to the spray features.
18. The ultraviolet light disinfection system must be equipped with an automatic shutdown system that inactivates the water feature pump if the ultraviolet dosage rate drops below

40 mJ/cm2.

19. Artificial lighting shall be provided at all spray ground pads which are used at night or which do not have adequate natural lighting so that all portions of the spray pad and deck may be seen easily. Lighting that may be exposed to the feature pool water shall be installed in accordance with the manufacturer's specifications and the California Electrical Code.
20. A means of diverting runoff from the splash zone shall be installed on the spray ground drainage piping before the surge basin to divert water to the storm drainage system when the spray ground is not in operation.
21. A removable and cleanable catch screen or basket shall be installed on the spray ground drainage system before it enters the reservoir to prevent larger debris

For further information, visit our web site at **http://www.publichealth.lacounty.gov/eh/EP/rw/rw_plans.htm**

Dimension Requirements For A Pool Without Diving Boards

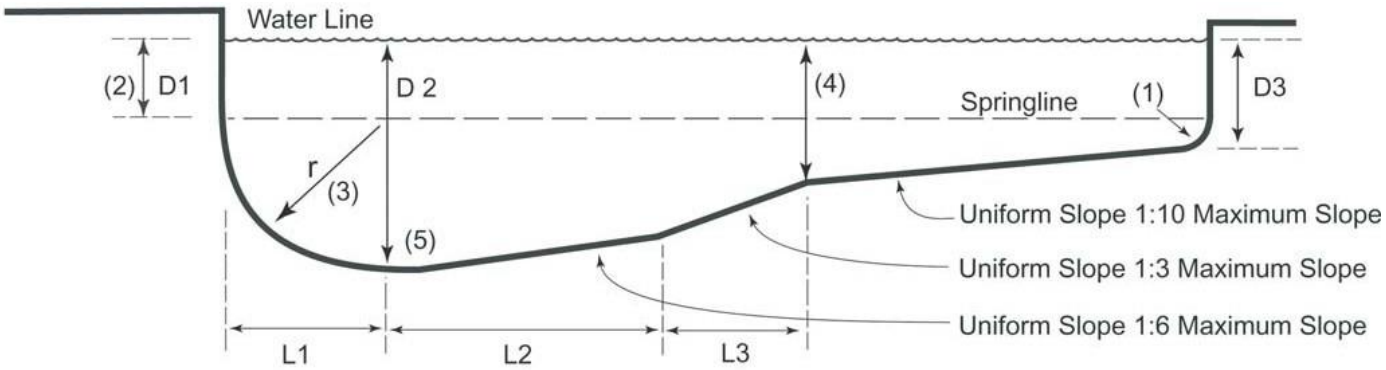

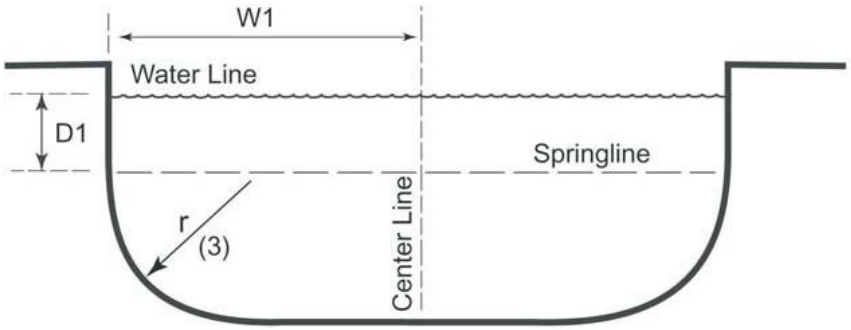

POOLS WITH MAXIMUM WATER DEPTH = 6′0″

Dimension	D1	D2	D3	L1	L2	L3	W1
Minimum	*2′ 6″*	*-*	*0′ 0″*	*3′ 6″*	*3′ 0″*	*3′ 0″*	*6′ 0″*
Maximum	*—*	*6′ 0″*	*3′ 6″*	*—*	*—*	*—*	*—*

POOLS WITH MAXIMUM WATER DEPTH > 6′ 0″

Dimension	D1	D2	D3	L1	L2	W1
Minimum	*2′ 6″*	*(5)*	*0′ 0″*	*3′ 6″*	*3′ 0″*	*7′ 6″*
Maximum	*—*	*—*	*3′ 6″*	*—*	*—*	*—*

Notes for Figure 31B-3 and Tables 31B-3a and 31B-3b.:

1. *Radius at the shallow end shall be a minimum of 0′ 6″ and a maximum of 1′ 0″.*
2. *Springline D1 shall extend to the break in slope between the shallow area and the deep area.*
3. *Maximum radius shall equal D2 minus D1 dimensions.*
4. *Where there is a break in slope, the break in slope shall be located at a water depth equal to 4′ 6″.*
5. *The main drain shall be located to provide complete drainage of the pool.*

Spa Pools

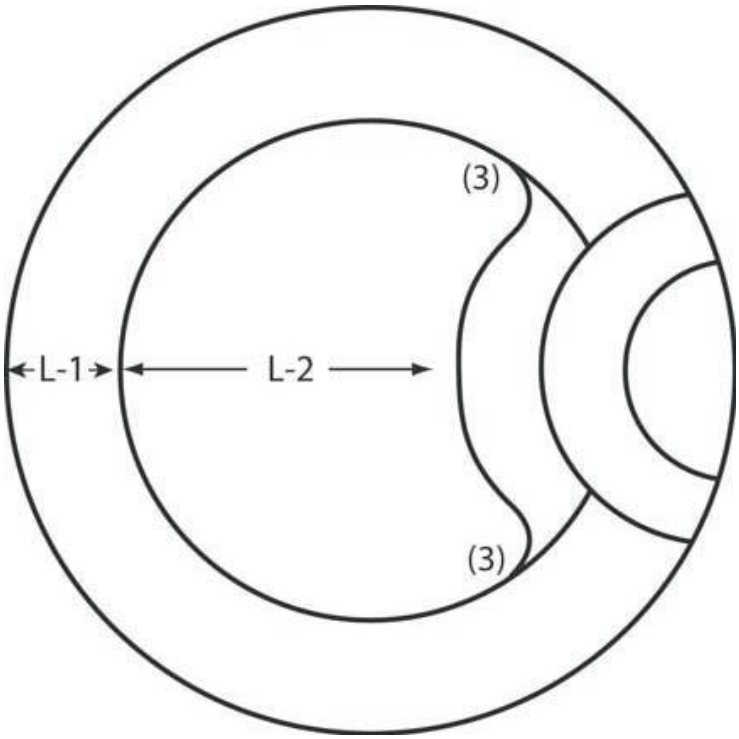

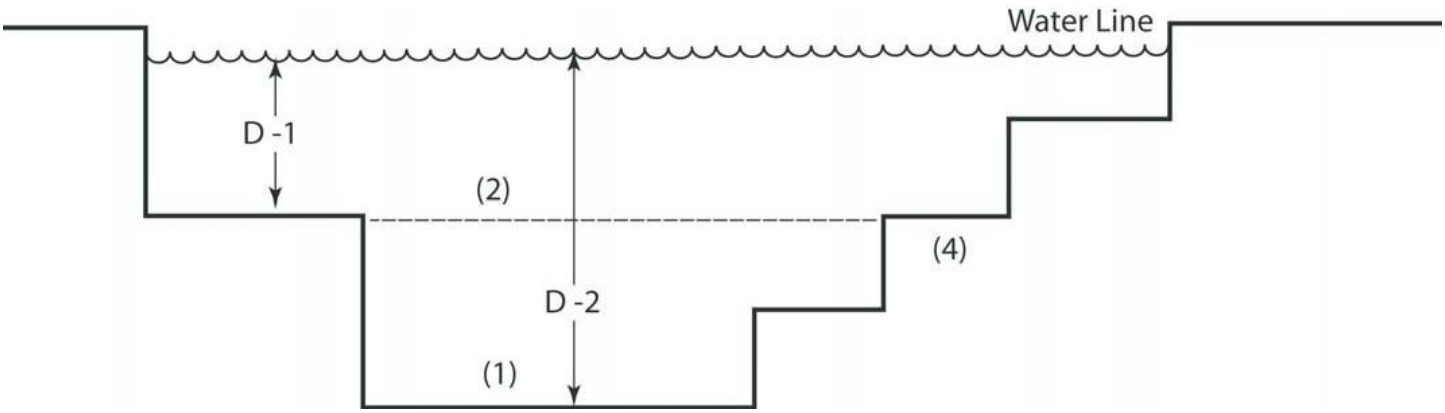

Dimension	D1	D2	L1	L2
Minimum	—	*24"*	*12"*	*24"*
Maximum	*24"*	*42"*	*24"*	—

APPROVED COPING

Monolithic Concrete Coping

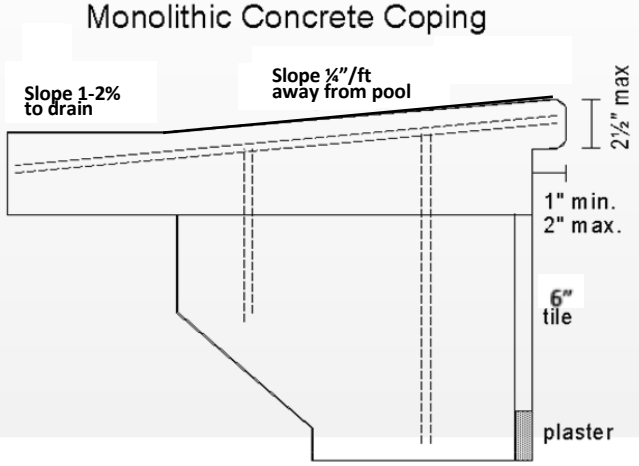

Cast-in-Place Concrete Coping

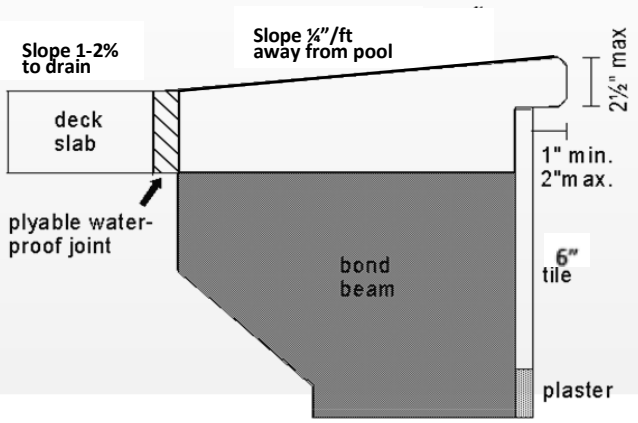

Precast Bullnose Coping

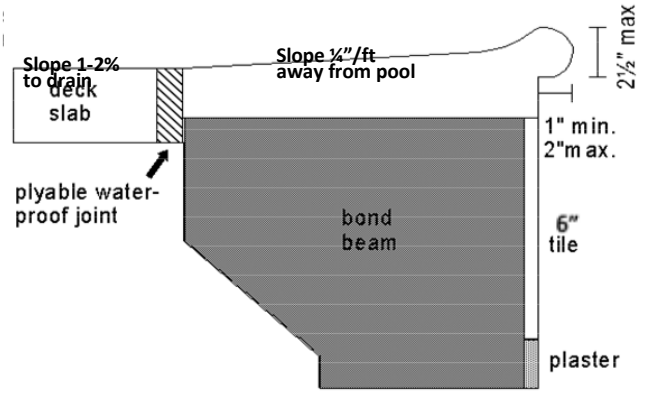

Brick Bullnose Coping

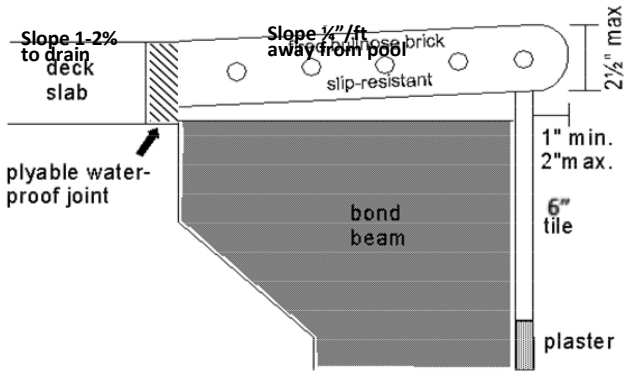

Fiberglass Spa Coping

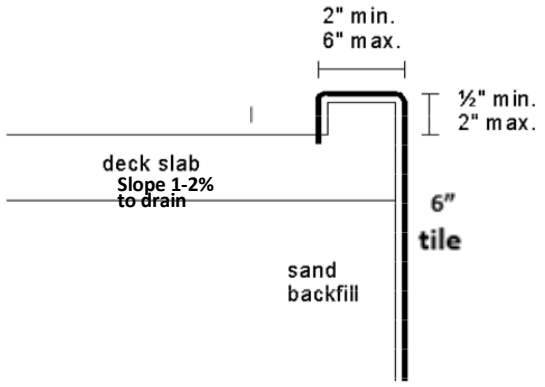

Perimeter Overflow Pools

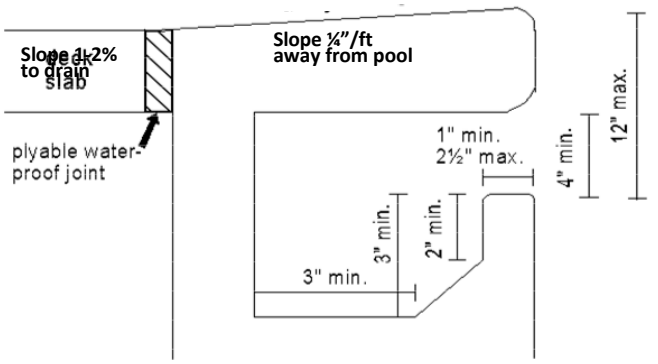

Rim Flow Pools (C701 type)

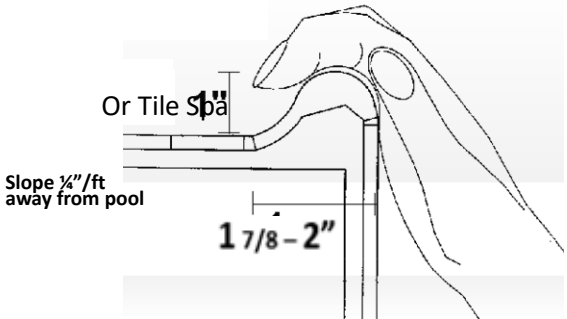

Fencing Dimensions

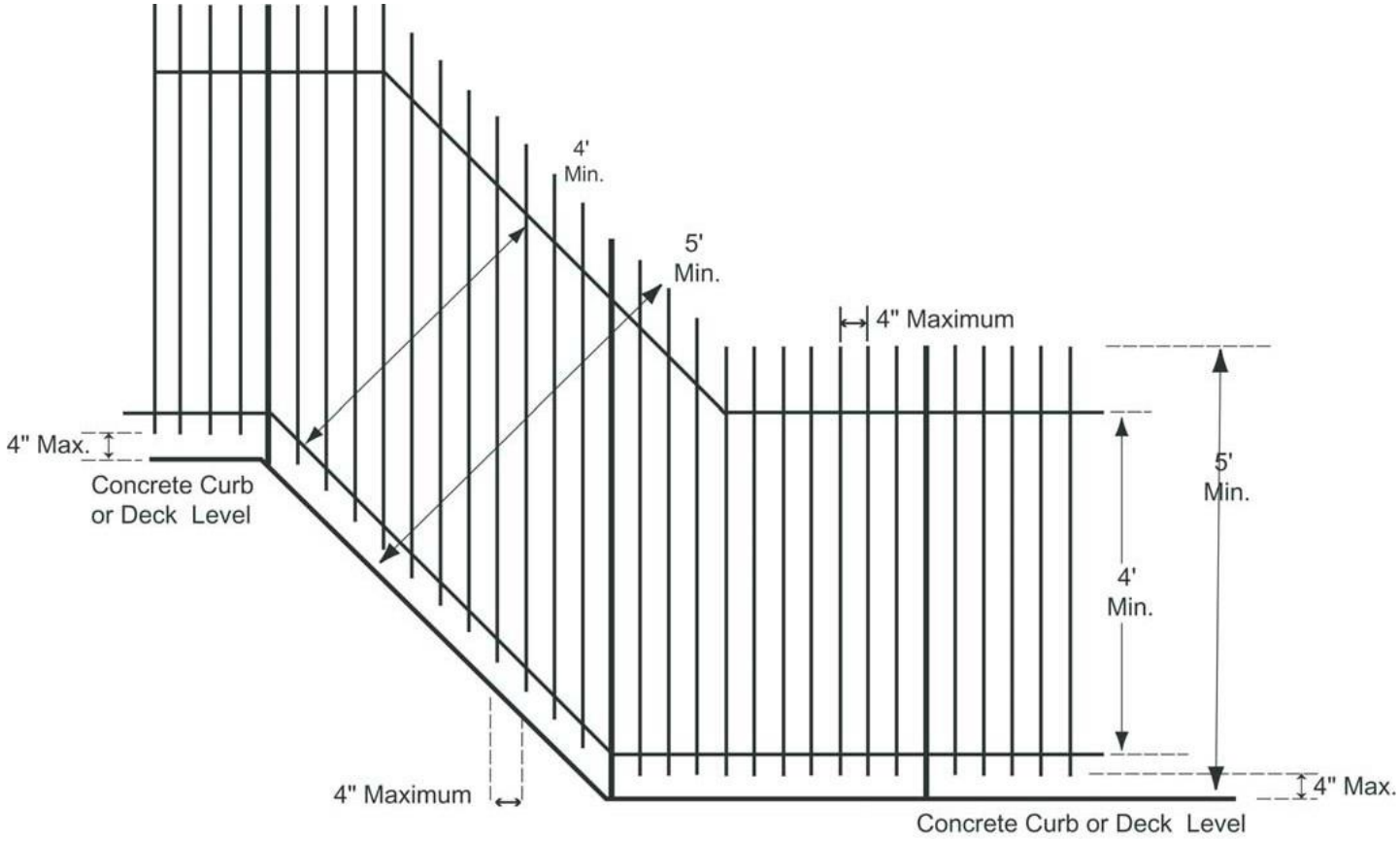

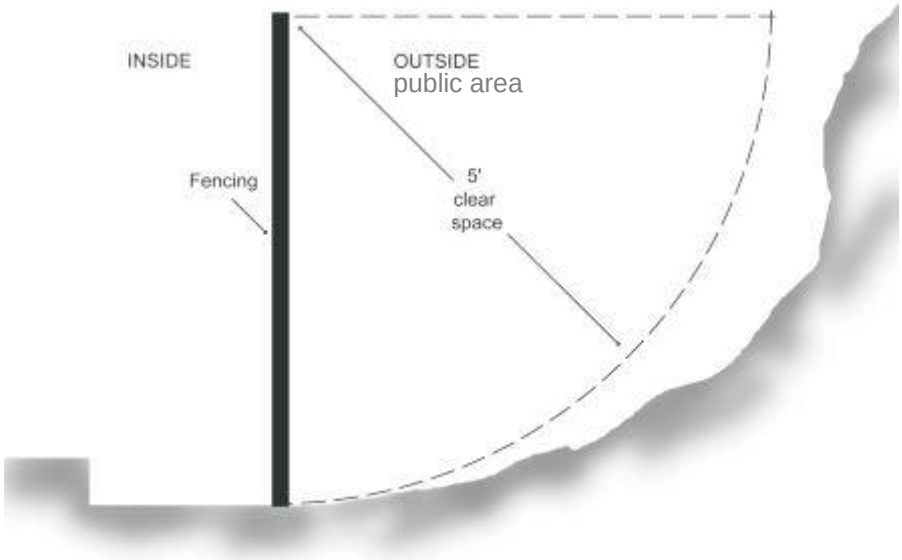

Stair and Handrail Dimensions

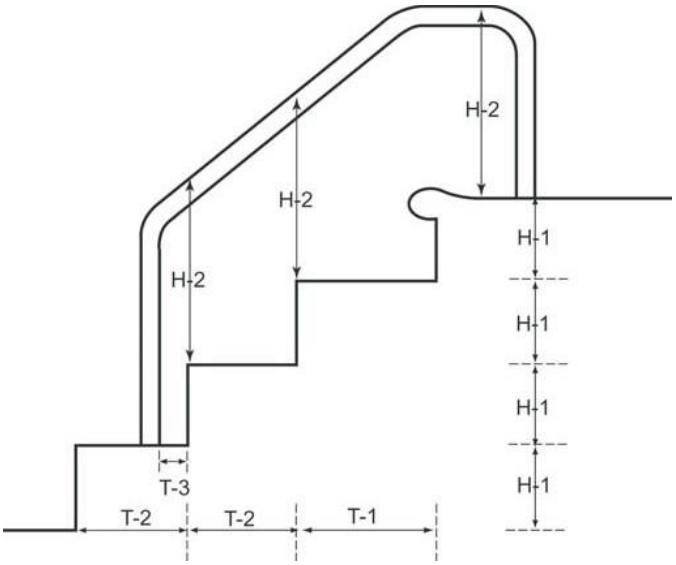

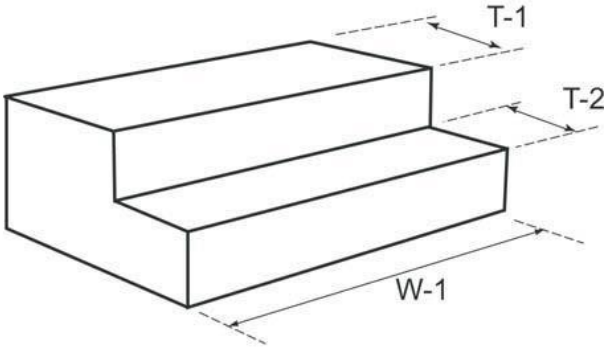

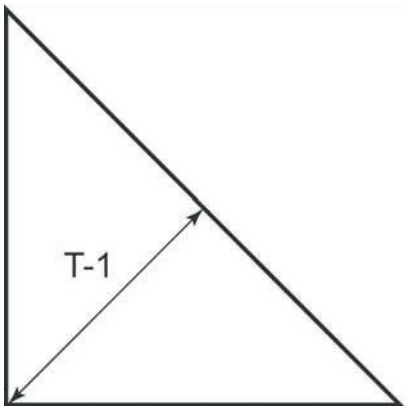

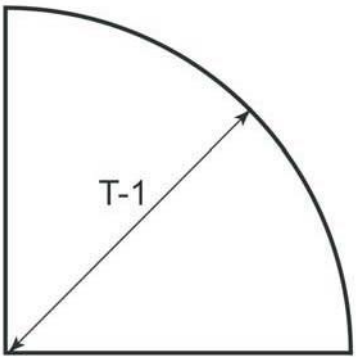

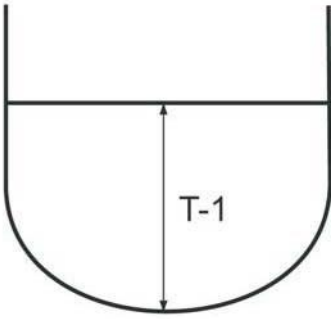

Dimensions	T-1 Standard	T-1 Triangular, Concave, Convex	T-2	T-3	W-1	H-1	H-2
Minimum	14"	21"	12"	3"	24"	6"	28"
Maximum	18"	24"	16"	---	---	12"	36"