INDEX OF PLANS

SHEET No.	SHEET ID	DESCRIPTION
1	T-1	TITLE SHEET
2	GN-1	GENERAL NOTES
3	K-1	KEY MAP
4-6	PC-1 TO PC-3	PROJECT CONTROL
7-10	X-1 TO X-4	TYPICAL SECTIONS
11-22	DM-1 TO DM-12	DEMOLITION AND STAGE CONSTRUCTION AREAS
23-36	L-1 TO L-14	PLAN AND PROFILE
37-42	C-1 TO C-6	CONSTRUCTION DETAILS
43-49	D-1 TO D-7	DRAINAGE PLAN & PROFILES
50	DD-1	DRAINAGE DETAILS
51	CS-1	CONSTRUCTION AREA SIGNS
52-53	PD-1 TO PD-2	SIGNING & STRIPING DETAILS
54	LS-1	LANDSCAPE SITE PLAN
55	LS-2	LANDSCAPE SITE DETAILS
56-66	PL-1 TO PL-11	PLANTING PLANS
67	PL-12	PLANTING DETAILS AND NOTES
68-73	IR-1 TO IR-6	IRRIGATION PLANS
74-75	IR-7 TO IR-8	IRRIGATION DETAILS

STRUCTURE PLANS

76-84	S1-1 TO S1-9	CLOVERRIDGE LANE UNDERCROSSING
85-92	S2-1 TO S2-8	RETAINING WALL NO. 1
93-95	S3-1 TO S3-3	RETAINING WALL NO. 2
96-109	S4-1 TO S4-14	SOUTH HIGUERA PEDESTRIAN BRIDGE

COUNTY OF SAN LUIS OBISPO

DEPARTMENT OF PUBLIC WORKS

CONSTRUCTION PROJECT PLANS FOR

BOB JONES TRAIL

IN SAN LUIS OBISPO COUNTY
NEAR SAN LUIS OBISPO FROM CLOVERRIDGE LANE
TO 0.1 MILE NORTH OF BUCKLEY ROAD

COUNTY CONTRACT No. 320096
TO BE SUPPLEMENTED BY
STATE OF CALIFORNIA STANDARD PLANS DATED 2024

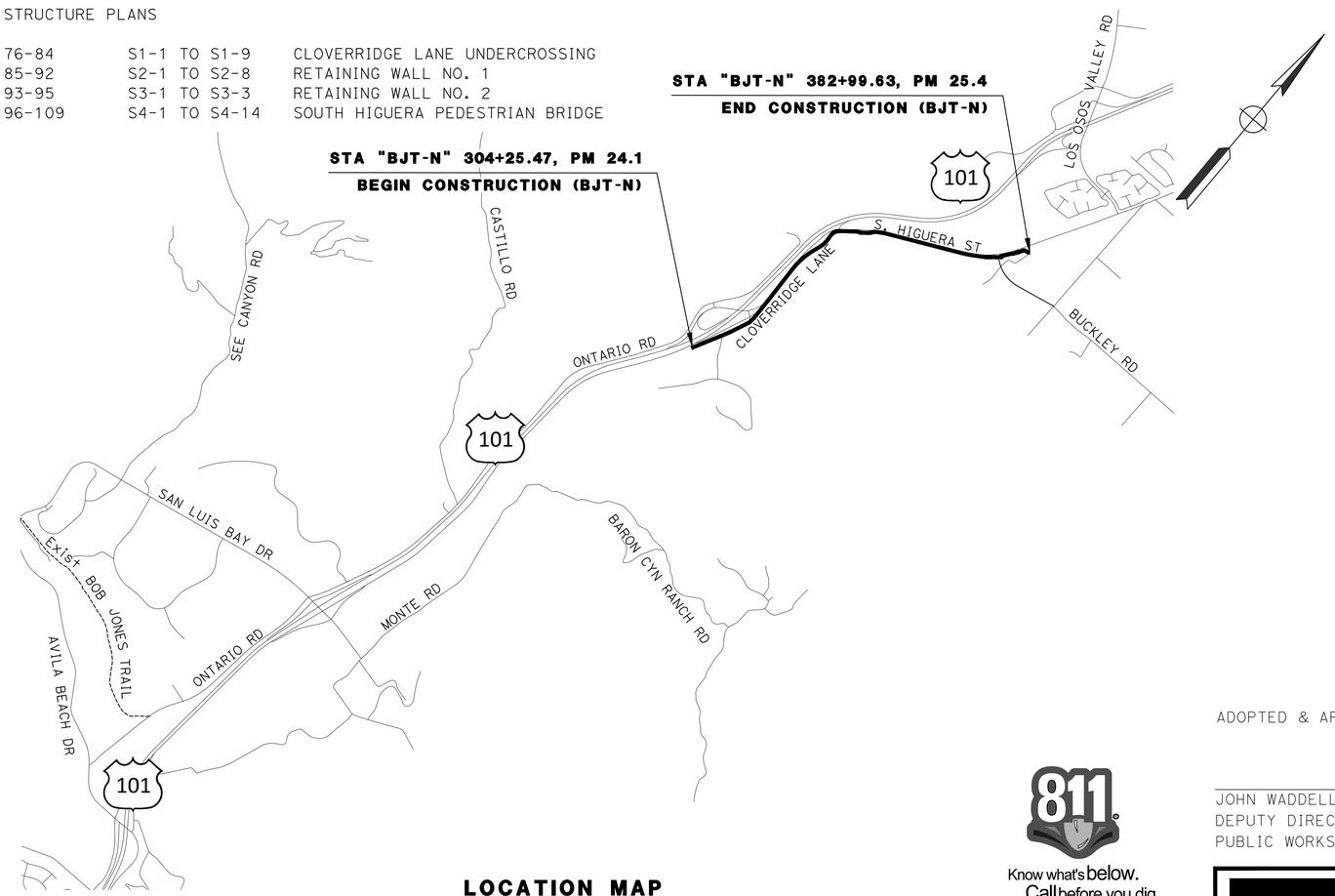

LOCATION MAP
NTS

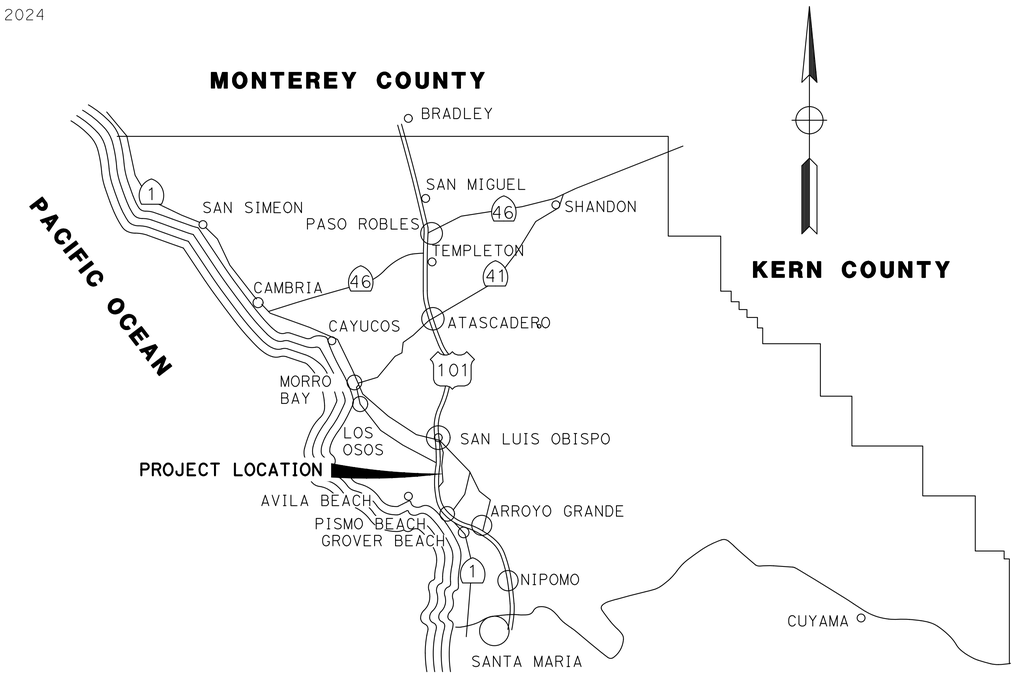

VICINITY MAP
NTS

ADOPTED & APPROVED:_____

JOHN WADDELL
DEPUTY DIRECTOR
PUBLIC WORKS, COUNTY OF SAN LUIS OBISPO

DRAFT FINAL SUBMITTAL

Know what's below. Call before you dig.

COUNTY OF SAN LUIS OBISPO
DEPARTMENT OF PUBLIC WORKS
COUNTY GOVERNMENT CENTER, ROOM 206
SAN LUIS OBISPO, CA 93408

SCALE: H: AS SHOWN V:
ORIGINAL SCALE IN INCHES FOR REDUCED PLANS
0 1 2

REVISIONS

NO.	BY	DATE	DESCRIPTION	APPROVED BY	DATE

WALLACE GROUP®
CIVIL AND TRANSPORTATION ENGINEERING
CONSTRUCTION MANAGEMENT
LANDSCAPE ARCHITECTURE
MECHANICAL ENGINEERING
PLANNING
PUBLIC WORKS ADMINISTRATION
SURVEYING / GIS SOLUTIONS
WATER RESOURCES
612 CLARION COURT
SAN LUIS OBISPO, CA 93401
T 805 544-4011 F 805 544-4294
www.wallacegroup.us

PROJECT ENGINEER

DATE SIGNED

REGISTERED PROFESSIONAL ENGINEER
JORGE A. AGUILAR
No. 48704
FOR PLAN REVIEW ONLY
NOT FOR CONSTRUCTION
CIVIL
STATE OF CALIFORNIA

BOB JONES TRAIL

TITLE SHEET

T-1

DESIGNED BY	DRAWN BY	CHECKED BY	JOB NUMBER	SHEET	OF
SMH	ZVC	RAH	0019-0101	1	109

FILE NAME: 0019-0101-TITL.DWG
PLOT DATE: 1/20/2025 5:13 PM
BY: ZACH CAMPANG

NOTES:

1. WATERS OF THE STATE, WATERS OF THE UNITED STATES, AND RIPARIAN HABITAT ORIGINALLY MAPPED IN THE FIELD IN 2008 AND REASSESSED AND UPDATED IN SEPTEMBER 2023.

2. PROPOSED WORK SHALL NOT ENCROACH INTO THE OHWM, WETTED CHANNEL OF THE CREEK, OR INTO FLOWING WATER. THE THVF (ESA FENCING) WILL BE PLACED ABOVE THE OHWM WITH ACCESS PROHIBITED BEYOND IT WITH THE EXCEPTION THAT ALONG THE WEST BANK OF SAN LUIS OBISPO CREEK AT THE SOUTH HIGUERA BRIDGE WETLAND MATS MAY BE PLACE UP TO THE WATER'S EDGE OF THE CREEK, LIKELY EXTENDING PARTIALLY BELOW THE OHWM TO FACILITATE EQUIPMENT ACCESS AROUND THE PIER ON THE WESTERN BANK. WETLAND MATS WILL NOT EXTEND INTO FLOWING WATER AND NO DIVERSION OR DEWATERING OF THE CREEK WILL BE IMPLEMENTED.

3. THE WORK TO CONSTRUCT THE TRAIL AND BRIDGE IS GENERALLY EXPECTED TO PROCEED AS FOLLOWS WITH CONTRACTOR RESPONSIBLE FOR ACTUAL EQUIPMENT, METHODS AND MEANS:

   a. CONTRACTOR WILL ENTER CONSTRUCTION AREA WITH SURVEY STAFF AND EQUIPMENT TO SET LIMITS FOR CONSTRUCTION ACTIVITIES BY PLACING TEMPORARY HIGH VISIBILITY FENCE (ESA FENCE), FIBER ROLLS, OR OTHER EROSION CONTROL MEASURES. FIBER ROLLS WILL BE PLACED AT TOE OF SLOPES AND WHERE SHOWN.

   b. ONCE ACCESS LIMITS AND TEMPORARY EROSION CONTROL ELEMENTS ARE SET, CONSTRUCTION STAFF WILL USE TRUCKS/TRACTORS AND OTHER MECHANIZED AS WELL AS HAND EQUIPMENT TO REMOVE VEGETATION (CLEAR AND GRUB). ROUGH GRADING WILL FOLLOW TO ALLOW FURTHER ACCESS AND CONSTRUCTION ACTIVITIES TO PROCEED.

   c. CONTRACTOR TO PROVIDE DUST CONTROL, EQUIPMENT CLEAN OUT AREAS FOR CONSTRUCTION SITE ACTIVITIES, AND STREET SWEEPING FOR ANY MATERIAL TRACKED ONTO STREETS.

   d. DRILL RIGS WILL ACCESS ABUTMENT AND PIER LOCATIONS TO DRILL SUBSTRUCTURE SHAFTS AND PLACE CASINGS FOR CAST-IN-DRILLED-HOLE (CIDH) PILES.

   e. GROUNDWATER ENCOUNTERED DURING DRILLING OF SHAFTS SHALL BE PUMPED INTO DEWATERING BAGS, FILTRATION TANKS OR OTHER SUCH SYSTEMS TO REMOVE SEDIMENT BEFORE ALLOWING CLEAR WATER TO OVERLAND FLOW AND/OR PERCOLATE FROM THE CONSTRUCTION AREA.

   f. REINFORCING STEEL (REBAR) WILL BE LIFTED BY CRANE AND SET INTO THE DRILLED SHAFTS THEN CONCRETE WILL BE PUMPED INTO THE SHAFTS.

   g. FORMS AND REINFORCING STEEL FOR SUBSTRUCTURE SUPPORTS, ABUTMENTS/PIER CAPS, WILL BE SET AND CONCRETE POURED FOR THOSE ELEMENTS.

   h. PREFABRICATED BRIDGE SUPERSTRUCTURE WILL BE TRUCKED ONTO THE SITE AND CRANE LIFTED TO BE SET AND CONNECTED TO THE SUBSTRUCTURE SUPPORTS

   i. SUBGRADE GRADING ACTIVITIES TO PREPARE SITE FOR PROPOSED IMPROVEMENTS WILL BE UNDERTAKEN, AND THAT SUBGRADE WILL BE COMPACTED BEFORE PLACING TRAIL SURFACING.

   j. AGGREGATE BASE (AB) SHALL BE SPREAD AND COMPACTED TO CONSTRUCT TRAIL WITH HOT MIX ASPHALT (HMA) OR CONCRETE SPREAD AND COMPACTED OVER THE AB PER DESIGN DOCUMENTS.

   k. ROCK SLOPE PROTECTION (RSP) WILL BE CLASS II WITH RSP FABRIC. RSP WILL BE PLACED AT INLET AND OUTLET OF PROPOSED CULVERTS UNLESS SHOWN OTHERWISE. RSP WILL ALSO BE PLACED ON BOTH SIDES OF TRAIL UNDER US 101.

   l. FINISH ACTIVITIES WILL INCLUDE SETTING OF SIGNS, FENCING AND OTHER ANCILLARY FEATURES OF THE TRAIL DESIGN.

   m. MITIGATION PLANTING AND HYDROSEEDING OF DISTURBED AREAS ARE EXPECTED TO BE LAST ORDER OF WORK IN AREAS DESIGNATED TO RECEIVE SUCH TREATMENT.

PROJECT DESCRIPTION:

THE FOLLOWING IS A PROJECT DESCRIPTION FOR PHASE 1 OF THE BOB JONES TRAIL IN SAN LUIS OBISPO COUNTY (COUNTY), CALIFORNIA. THIS SECTION WILL CONSIST OF A SEPARATE CLASS I TRAIL FOR A DISTANCE OF APPROXIMATELY 1.5 MILES BETWEEN CLOVERRIDGE LANE AND THE OCTAGON BARN, SOUTH OF THE CITY OF SAN LUIS OBISPO. THE BOB JONES TRAIL WILL BEGIN AT THE SOUTHERN PAVED LIMITS OF CLOVERRIDGE LANE WITHIN COUNTY R/W FOLLOWING ALONG CLOVERRIDGE LANE AND TO THE WEST OF THE ROADWAY. AT CLOVERRIDGE LANE NEAR THE SOUTH HIGUERA NB OFF-RAMP, THE TRAIL WOULD CROSS UNDER CLOVERRIDGE LANE VIA A NEW BIKE/PEDESTRIAN TUNNEL. AS PART OF THE CONSTRUCTION OF THE BOX CULVERT AND WINGWALLS, THE GUARDRAIL ALONG CLOVERRIDGE LANE AND THE NB OFF-RAMP WILL BE RECONSTRUCTED. NORTH OF CLOVERRIDGE LANE, THE TRAIL IS WITHIN STATE R/W AND WILL BE BETWEEN SAN LUIS OBISPO CREEK AND THE NB OFF-RAMP. THE TRAIL IS LOWER THAN THE ROADWAY, AND A RETAINING WALL WILL BE REQUIRED ON THE CREEK SIDE TO ELIMINATE GRADING INTO PRIVATE PROPERTY AND ADDITIONAL ENVIRONMENTAL IMPACTS. AS THE TRAIL APPROACHES ROADWAY GRADE, A CONCRETE BARRIER WILL BE ADDED ALONG THE EDGE OF THE NB OFF-RAMP TO SHIELD THE TRAIL USERS. THE BOB JONES TRAIL WOULD CONTINUE TO THE NORTH BETWEEN THE EAST EDGE OF SOUTH HIGUERA STREET AND THE SLO CREEK CORRIDOR NEAR THE TOP OF BANK. THE PROPOSED SOUTH HIGUERA BRIDGE WHICH WOULD ALLOW THE PATHWAY TO CROSS OVER SLO CREEK NEAR THE CITY OF SAN LUIS OBISPO FILIPPONI ECOLOGICAL RESERVE.

AFTER CROSSING SLO CREEK AT THE PROPOSED SOUTH HIGUERA BRIDGE, THE TRAIL WOULD CONTINUE TO RUN ALONG THE SOUTH/EAST SIDE OF SOUTH HIGUERA STREET BEFORE REACHING THE INTERSECTION OF BUCKLEY ROAD WITH SOUTH HIGUERA STREET. A CLASS I TRAIL WOULD PROCEED NORTHEAST ALONG THE EAST SIDE OF SOUTH HIGUERA STREET UP TO A TRAILHEAD AT THE OCTAGON BARN.

PROJECT OVERVIEW

CONSTRUCTION OF THE TRAIL WOULD PRIMARILY OCCUR WITHIN A TYPICALLY NARROW 30 TO 60-FOOT (FT) (9 TO 18-METERS [M]) WIDE CONSTRUCTION DISTURBANCE ZONE ON NEARLY LEVEL TERRAIN. IN SOME AREAS, THE CONSTRUCTION DISTURBANCE ZONE WOULD BE WIDER, UP TO 140 FEET (43 M) WIDE, TO INCLUDE ADJACENT STAGING AREAS, SUCH AS REQUIRED FOR ASSEMBLY AND INSTALLATION OF THE TRAIL BRIDGE. IN SEVERAL AREAS THE PATHWAY WOULD RUN PARALLEL TO AND WITHIN 30 FT (9 M) OF THE BANKS OF SLO CREEK AND ITS RIPARIAN CORRIDOR. SOME TREE TRIMMING AT THE RIPARIAN CANOPY EDGE WOULD BE REQUIRED FOR CONSTRUCTION ACCESS AND TO ENSURE ADEQUATE OVERHEAD CLEARANCE FOR BICYCLES, WHERE THE TRAIL PARALLELS THE CREEK CORRIDOR. TRIMMING AND REMOVAL OF SOME TREES WILL BE NECESSARY FOR PLACEMENT OF BRIDGE DECKS AT THE CREEK CROSSINGS.

PROPOSED STAGING AREAS HAVE BEEN IDENTIFIED ALONG THE NEW PATH. ALL STAGING AREAS WILL RESULT IN TEMPORARY IMPACTS UNLESS OTHERWISE DESCRIBED. ACCESS WILL BE ALONG PUBLIC AND PRIVATE ROADS AND ALONG CALIFORNIA DEPARTMENT OF TRANSPORTATION (CALTRANS) ROW.

RIPARIAN HABITAT IMPACTS

FEATURE	ALIGNMENT	STATION	HABITAT	PERMANENT		TEMPORARY	
				SQFT	LF	SQFT	LF
CULVERT A	BJT-N	374+42	RUDERAL	110	8	780	14
BRIDGE A (SOUTH HIGUERA) & TRAIL	BJT-N	341+65 TO 346+55	RUDERAL	0	0	5	(2)*
			RIPARIAN WOODLAND	973	97	12,443	406
CULVERT B	BJT-N	341+40	RIPARIAN WOODLAND	418	27	1,716	27
TRAIL	BJT-N	339+88 TO 341+08	RIPARIAN WOODLAND	1,631	117	6,986	117
CULVERT C & TRAIL	BJT-N	333+51 TO 339+74	RIPARIAN WOODLAND	6,589	482	20,951	622
CULVERT D & TRAIL	BJT-N	323+22 TO 329+54	RIPARIAN WOODLAND	4,985	460	12,933	610
			DEVELOPED	0	(186)*	747	(196)*
RETAINING WALL	BJT-N	317+97 TO 323+22	RIPARIAN WOODLAND	2,713	398	9,507	512
			DEVELOPED	1,207	(290)*	1,386	(318)*
TOTAL				18,626	1,589	67,454	2,308
TOTAL (ACRES)				0.43		1.55	

*LINEAR IMPACTS OVERLAP WITH THOSE FOR RIPARIAN WOODLAND HABITAT

WATERS OF THE US/WATERS OF THE STATE IMPACTS

FEATURE	ALIGNMENT	STATION	HABITAT	PERMANENT		TEMPORARY	
				SQFT	LF	SQFT	LF
BRIDGE A (SOUTH HIGUERA)	BJT-N	343+40 TO 346+55	RIPARIAN WOODLAND	0	0	250	50
TOTAL				0	0	250	50
TOTAL (ACRES)				0.00		0.01	

COUNTY OF SAN LUIS OBISPO
DEPARTMENT OF PUBLIC WORKS
COUNTY GOVERNMENT CENTER, ROOM 206
SAN LUIS OBISPO, CA 93408

SCALE: H:NO SCALE V:
ORIGINAL SCALE IN INCHES FOR REDUCED PLANS
0 1 2

REVISIONS

NO.	BY	DATE	DESCRIPTION	APPROVED BY	DATE
△					
△					
△					
△					
△					

WALLACE GROUP®
CIVIL AND TRANSPORTATION ENGINEERING
CONSTRUCTION MANAGEMENT
LANDSCAPE ARCHITECTURE
MECHANICAL ENGINEERING
PLANNING
PUBLIC WORKS ADMINISTRATION
SURVEYING / GIS SOLUTIONS
WATER RESOURCES
612 CLARION COURT
SAN LUIS OBISPO, CA 93401
T 805 544-4011 F 805 544-4294
www.wallacegroup.us

PROJECT ENGINEER

DATE SIGNED

BOB JONES TRAIL

MITIGATION NOTES

EX-1

DESIGNED BY	DRAWN BY	CHECKED BY	JOB NUMBER	SHEET	OF
EAS	MCC	JAA	0019-0101	1	18

FILE NAME: 0019-0101-EXBT-ENVR-01.DWG
PLOT DATE: 1/31/2025 10:27 AM BY:SARAH HUFFMAN

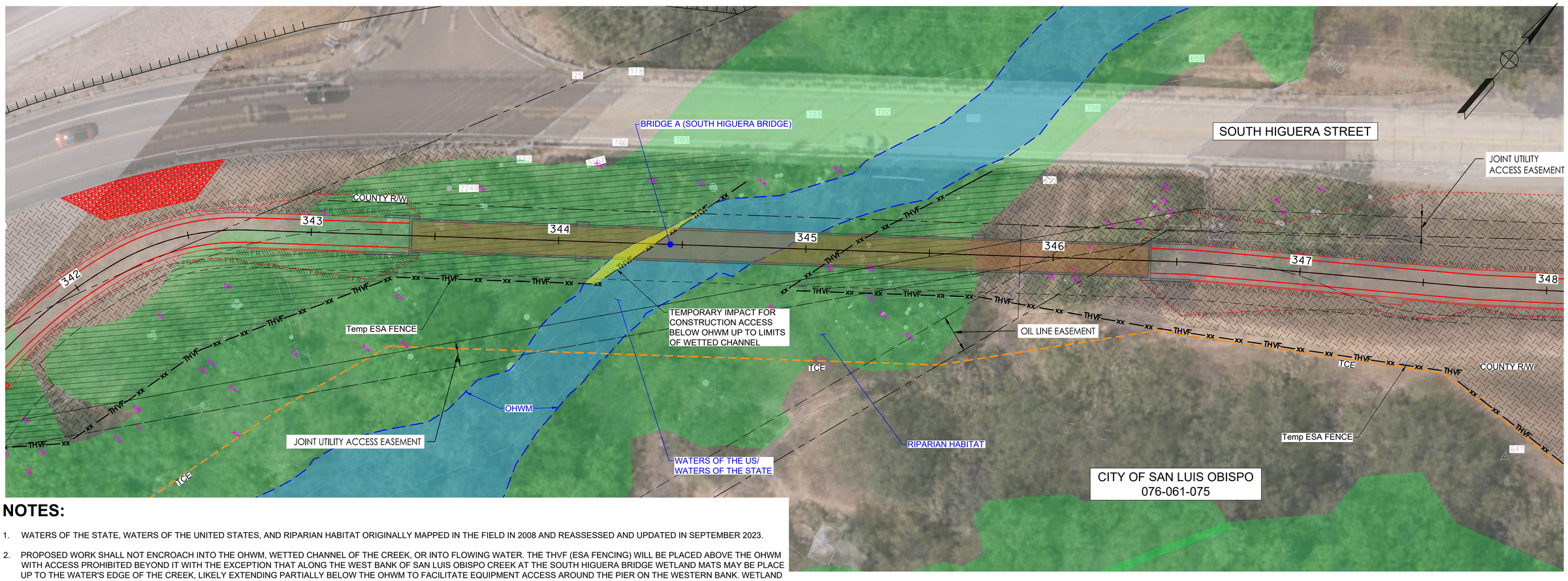

NOTES:

1. WATERS OF THE STATE, WATERS OF THE UNITED STATES, AND RIPARIAN HABITAT ORIGINALLY MAPPED IN THE FIELD IN 2008 AND REASSESSED AND UPDATED IN SEPTEMBER 2023.
2. PROPOSED WORK SHALL NOT ENCROACH INTO THE OHWM, WETTED CHANNEL OF THE CREEK, OR INTO FLOWING WATER. THE THVF (ESA FENCING) WILL BE PLACED ABOVE THE OHWM WITH ACCESS PROHIBITED BEYOND IT WITH THE EXCEPTION THAT ALONG THE WEST BANK OF SAN LUIS OBISPO CREEK AT THE SOUTH HIGUERA BRIDGE WETLAND MATS MAY BE PLACE UP TO THE WATER'S EDGE OF THE CREEK, LIKELY EXTENDING PARTIALLY BELOW THE OHWM TO FACILITATE EQUIPMENT ACCESS AROUND THE PIER ON THE WESTERN BANK. WETLAND MATS WILL NOT EXTEND INTO FLOWING WATER AND NO DIVERSION OR DEWATERING OF THE CREEK WILL BE IMPLEMENTED.
3. THE WORK TO CONSTRUCT THE TRAIL AND BRIDGE IS GENERALLY EXPECTED TO PROCEED AS FOLLOWS WITH CONTRACTOR RESPONSIBLE FOR ACTUAL EQUIPMENT, METHODS AND MEANS:
   a. CONTRACTOR WILL ENTER CONSTRUCTION AREA WITH SURVEY STAFF AND EQUIPMENT TO SET LIMITS FOR CONSTRUCTION ACTIVITIES BY PLACING TEMPORARY HIGH VISIBILITY FENCE (ESA FENCE), FIBER ROLLS, OR OTHER EROSION CONTROL MEASURES. FIBER ROLLS WILL BE PLACED AT TOE OF SLOPES AND WHERE SHOWN.
   b. ONCE ACCESS LIMITS AND TEMPORARY EROSION CONTROL ELEMENTS ARE SET, CONSTRUCTION STAFF WILL USE TRUCKS/TRACTORS AND OTHER MECHANIZED AS WELL AS HAND EQUIPMENT TO REMOVE VEGETATION (CLEAR AND GRUB). ROUGH GRADING WILL FOLLOW TO ALLOW FURTHER ACCESS AND CONSTRUCTION ACTIVITIES TO PROCEED.
   c. CONTRACTOR TO PROVIDE DUST CONTROL, EQUIPMENT CLEAN OUT AREAS FOR CONSTRUCTION SITE ACTIVITIES, AND STREET SWEEPING FOR ANY MATERIAL TRACKED ONTO STREETS.
   d. DRILL RIGS WILL ACCESS ABUTMENT AND PIER LOCATIONS TO DRILL SUBSTRUCTURE SHAFTS AND PLACE CASINGS FOR CAST-IN-DRILLED-HOLE (CIDH) PILES.
   e. GROUNDWATER ENCOUNTERED DURING DRILLING OF SHAFTS SHALL BE PUMPED INTO DEWATERING BAGS, FILTRATION TANKS OR OTHER SUCH SYSTEMS TO REMOVE SEDIMENT BEFORE ALLOWING CLEAR WATER TO OVERLAND FLOW AND/OR PERCOLATE FROM THE CONSTRUCTION AREA.
   f. REINFORCING STEEL (REBAR) WILL BE LIFTED BY CRANE AND SET INTO THE DRILLED SHAFTS THEN CONCRETE WILL BE PUMPED INTO THE SHAFTS.
   g. FORMS AND REINFORCING STEEL FOR SUBSTRUCTURE SUPPORTS, ABUTMENTS/PIER CAPS, WILL BE SET AND CONCRETE POURED FOR THOSE ELEMENTS.
   h. PREFABRICATED BRIDGE SUPERSTRUCTURE WILL BE TRUCKED ONTO THE SITE AND CRANE LIFTED TO BE SET AND CONNECTED TO THE SUBSTRUCTURE SUPPORTS
   i. SUBGRADE GRADING ACTIVITIES TO PREPARE SITE FOR PROPOSED IMPROVEMENTS WILL BE UNDERTAKEN, AND THAT SUBGRADE WILL BE COMPACTED BEFORE PLACING TRAIL SURFACING.
   j. AGGREGATE BASE (AB) SHALL BE SPREAD AND COMPACTED TO CONSTRUCT TRAIL WITH HOT MIX ASPHALT (HMA) SPREAD AND COMPACTED OVER THE AB PER DESIGN DOCUMENTS.
   k. FINISH ACTIVITIES WILL INCLUDE SETTING OF SIGNS, FENCING AND OTHER ANCILLARY FEATURES OF THE TRAIL DESIGN.
   l. MITIGATION PLANTING AND HYDROSEEDING OF DISTURBED AREAS ARE EXPECTED TO BE LAST ORDER OF WORK IN AREAS DESIGNATED TO RECEIVE SUCH TREATMENT.

LEGEND:

- X123 — EXISTING TREE
- —xx—THVF— TEMPORARY ESA FENCE (NO ACCESS BEYOND FENCE)
- GRADING LIMITS
- EASEMENT
- TEMPORARY CONSTRUCTION EASEMENT
- FR — FIBER ROLL
- OHWM
- ROCK SLOPE PROTECTION

MITIGATION PLANT SCHEDULE

TEMPORARY IMPACT UPLAND MITIGATION AREA	193,995 SF
TEMPORARY IMPACT RIPARIAN HABITAT RESTORATION AREA	41,609 SF
PERMANENT IMPACT COMPENSATORY RIPARIAN HABITAT MITIGATION AREA	85,032 SF

COUNTY OF SAN LUIS OBISPO
DEPARTMENT OF PUBLIC WORKS
COUNTY GOVERNMENT CENTER, ROOM 206
SAN LUIS OBISPO, CA 93408

SCALE: H: 1" = 20' V:
ORIGINAL SCALE IN INCHES FOR REDUCED PLANS
0 1 2

REVISIONS

NO.	BY	DATE	DESCRIPTION	APPROVED BY	DATE
△					
△					
△					
△					
△					

WALLACE GROUP®
CIVIL AND TRANSPORTATION ENGINEERING
CONSTRUCTION MANAGEMENT
LANDSCAPE ARCHITECTURE
MECHANICAL ENGINEERING
PLANNING
PUBLIC WORKS ADMINISTRATION
SURVEYING / GIS SOLUTIONS
WATER RESOURCES
612 CLARION COURT
SAN LUIS OBISPO, CA 93401
T 805 544-4011 F 805 544-4294
www.wallacegroup.us

PROJECT ENGINEER
DATE SIGNED

BOB JONES TRAIL

MITIGATION PLANS
BRIDGE DETAIL
EX-13

DESIGNED BY	DRAWN BY	CHECKED BY	JOB NUMBER	SHEET	OF
EAS	MCC	JAA	0019-0101	13	18

FILE NAME: 0019-0101-EXBT-ENVR-02.DWG
PLOT DATE: 1/31/2025 10:34 AM BY: SARAH HUFFMAN

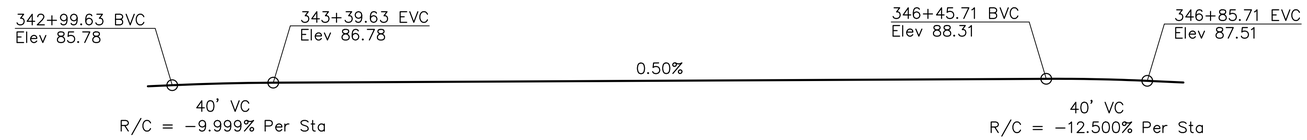

PROFILE
1" = 30'

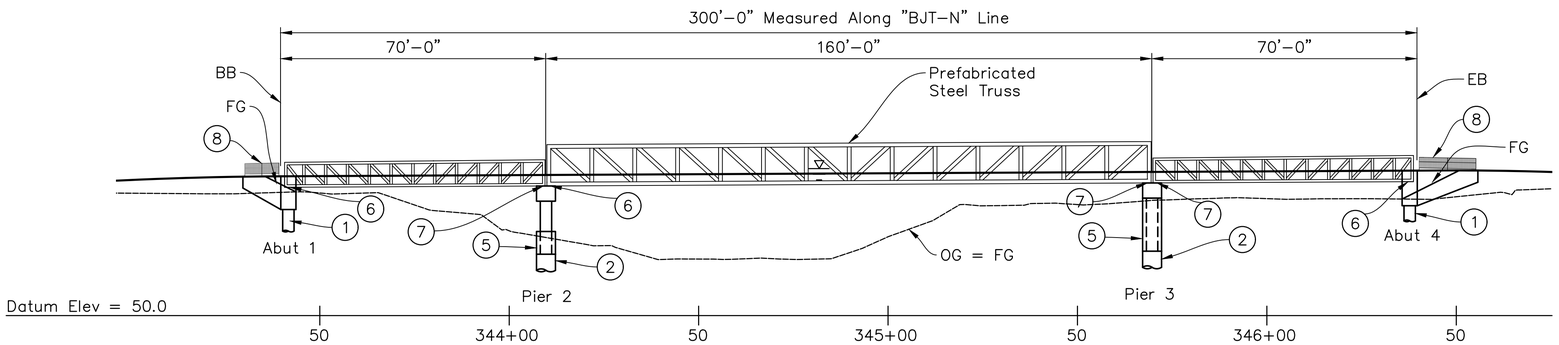

ELEVATION
1" = 20'

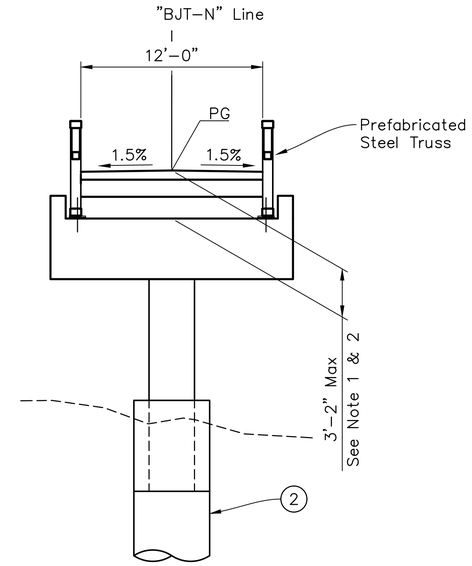

TYPICAL SECTION
1" = 5'

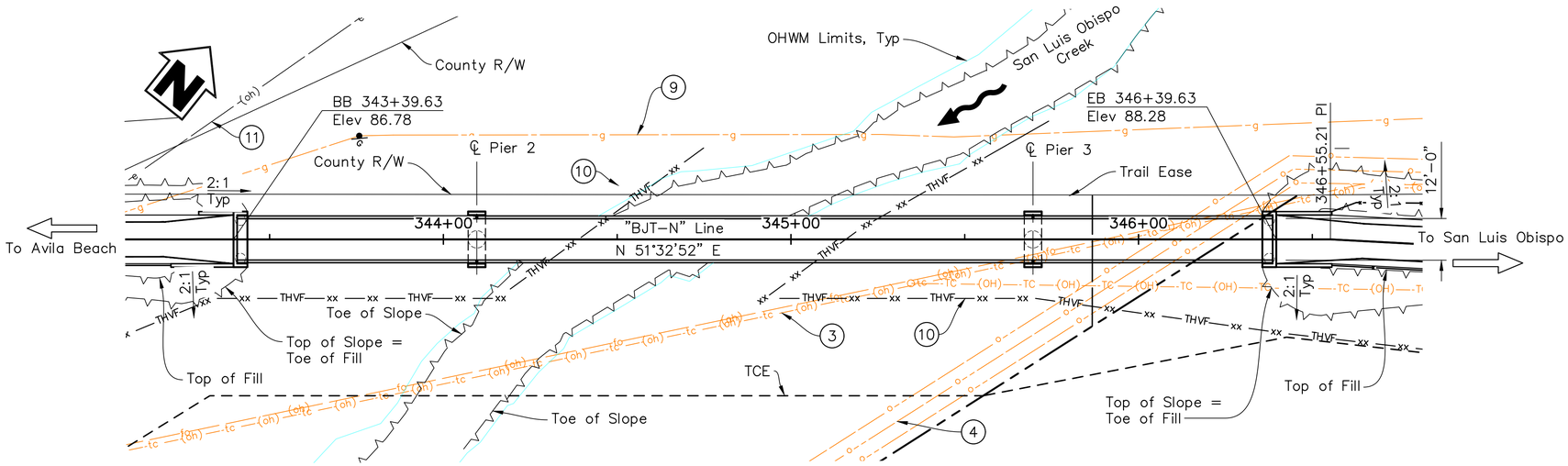

PLAN
1" = 20'

Legend:

- Direction of Travel
- Direction of Flow
- (1) 36" Dia Cast−in−Drilled Hole Concrete Pile with Permanent Casing
- (2) 60" Cast−in−Drilled−Hole Concrete Piling
- (3) Overhead communication lines to be moved prior to construction, see Civil Plans
- (4) Underground Oil lines
- (5) Isolation Casings
- (6) Superstructure fixed−end connection
- (7) Superstructure expansion−end connection
- (8) Wire Rail Fence, see Civil Plans
- (9) Underground Gas lines to remain in place
- (10) Environmental Limits
- (11) Overhead electrical lines to be moved prior to construction, see Civil Plans
- 100−year Highwater Elev = 88.8'

OHWM Ordinary High Water Mark

Notes:

1. Dimension measured from top of deck to bottom chord.
2. Contractor to verify all field measurements prior to procuring material.

COUNTY OF SAN LUIS OBISPO
DEPARTMENT OF PUBLIC WORKS
COUNTY GOVERNMENT CENTER, ROOM 206
SAN LUIS OBISPO, CA 93408

SCALE: SCALE
ORIGINAL SCALE IN INCHES FOR REDUCED PLANS
0 1 2

REVISIONS

NO.	BY	DATE	DESCRIPTION	APPROVED BY	DATE

consor
2868 PROSPECT PARK DRIVE, SUITE 250
RANCHO CORDOVA, CA 95670
P: 916.368.9181

JUAN C CRUZ
PROJECT ENGINEER

95% SUBMITTAL

PLANS APPROVAL DATE

REGISTERED PROFESSIONAL ENGINEER
JUAN C CRUZ
No. C88803
Exp. ----
CIVIL
STATE OF CALIFORNIA

BOB JONES TRAIL
SOUTH HIGUERA PEDESTRIAN BRIDGE
GENERAL PLAN
S4−1

DESIGNED BY	DRAWN BY	CHECKED BY	JOB NUMBER	SHEET	OF
J. Cruz / C. Cajegas	P. Kenney	T. Truchement	0019−0101	96	109

S:\Client\Wallace Group\W12-700 Bob Jones Bike Trail\505 - CAD\0231117F-g-gp01.dwg
PLOT DATE: 1/17/2025 1:25:08 PM BY: PATRICK.KENNEY

GENERAL NOTES
LOAD AND RESISTANCE FACTOR DESIGN

DESIGN: AASHTO LRFD Bridge Design Specifications, 8th edition and the Caltrans Amendments, preface dated 2019

AASHTO LRFD Guide Specifications for the Design of Pedestrian Bridges (2009) with 2015 Interim Revisions

SEISMIC DESIGN:
Caltrans Seismic Design Criteria (SDC), version 2.0, dated April 2019

LOADING:
Maximum unfactored reactions per base plate from Bridge Design at Span 1 and 3

Dead Load: 20.0 kips Vertical

Live Load: 20.0 kips Vertical

Vehicle Load: 12.0 kips Vertical

Maximum unfactored reactions per base plate from Bridge Design at Span 2

Dead Load: 55.0 kips Vertical

Live Load: 45.0 kips Vertical

Vehicle Load: 15.0 kips Vertical

REINFORCED CONCRETE:
f_y = 60 psi

f'_c = 4.0 ksi

n = 8

STRUCTURAL STEEL:
A: All steel shall be high strength low alloy (Fy = 50,000 psi), self weathering and atmospheric corrosion resistant.
- a. All steel plates shall conform to A588
- b. U.N.O. Anchor Bolts, washers, and nuts shall be hot dipped galvanized. Anchor Bolts shall be F1554 Grade 105, galvanized.
- c. 36" Permanent casing is ½" thickness and shall conform to A572.
- d. 60" Permanent casing is ½" thickness and shall conform to A572.

B. All steel surfaces shall be cleaned in accordance with Steel Structures Painting Council standard SSPC SP6–63.

SEISMIC LOADING:
Soil profile V_{S30} = 218 m/s

Moment Magnitude M_{max} = 6.72

Peak Ground Acceleration = 0.39g
see ARS Curve

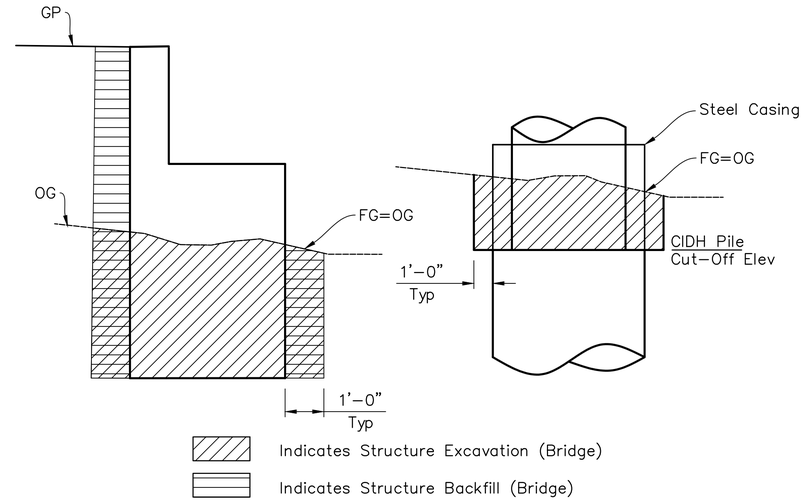

LIMITS OF PAYMENT FOR EXCAVATION AND BACKFILL
No Scale

INDEX TO PLANS

Structure Sheet No.	Title
S4–1	General Plan
S4–2	General Notes
S4–3	Foundation Plan
S4–4	Abutment 1 Layout
S4–5	Abutment Details No. 1
S4–6	Abutment Details No. 2
S4–7	Pier Layout
S4–8	Pier Details
S4–9	Typical Section
S4–10	Column Isolation Casing Details
S4–11	Joint Armor for Pedestrian Walkways Details
#####	Test Boring Layout
S4–13	Log of Test Borings 1 of 2
S4–14	Log of Test Borings 2 of 2

STANDARD PLANS DATED 2024

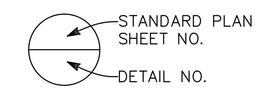

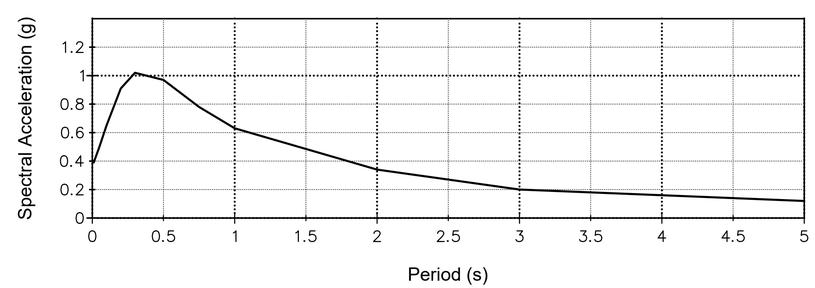

ACCELERATION RESPONSE SPECTRA CURVE
No Scale

QUANTITIES

Structure Excavation (Bridge)	72	CY
Structure Backfill (Bridge)	81	CY
36" Cast–In–Drilled–Hole Concrete Piling	268	LF
36" Permanent Steel Casing	96	LF
60" Cast–In–Drilled–Hole Concrete Piling	138	LF
60" Permanent Steel Casing	24	LF
Structural Concrete, Bridge	81	CY
Structural Concrete, Bridge (Polymer Fiber)	67	CY
Bar Reinforcement Steel (Bridge)	83471	LB
Erect Pre–Fabricated Pedestrian Bridge	LUMP	SUM
Furnish 160' Pre–Fabricated Pedestrian Bridge	1	EA
Furnish 70' Pre–Fabricated Pedestrian Bridge	2	EA
Isolation Casing	20	LF
Miscellaneous Metal (Bridge)	1088	LB

COUNTY OF SAN LUIS OBISPO
DEPARTMENT OF PUBLIC WORKS
COUNTY GOVERNMENT CENTER, ROOM 206
SAN LUIS OBISPO, CA 93408

SCALE: AS SCALE

ORIGINAL SCALE IN INCHES FOR REDUCED PLANS
0 1 2

REVISIONS

NO.	BY	DATE	DESCRIPTION	APPROVED BY	DATE
△					
△					
△					
△					
△					

consor
2868 PROSPECT PARK DRIVE, SUITE 250
RANCHO CORDOVA, CA 95670
P: 916.368.9181

Juan C Cruz
PROJECT ENGINEER

95% SUBMITTAL

PLANS APPROVAL DATE

REGISTERED PROFESSIONAL ENGINEER
JUAN C CRUZ
No. C88803
Exp. ----
CIVIL
STATE OF CALIFORNIA

BOB JONES TRAIL
SOUTH HIGUERA PEDESTRIAN BRIDGE
GENERAL NOTES
S4–2

DESIGNED BY	DRAWN BY	CHECKED BY	JOB NUMBER	SHEET	OF
J. Cruz / C. Cajegas	P. Kenney	T. Truchement	0019–0101	97	109

PLOT DATE: 1/17/2025 1:25:14 PM BY: JUAN.CRUZ S:\Client\Wallace Group\W12-700 Bob Jones Bike Trail\505 - CAD\023111TF-b-gnote.dwg

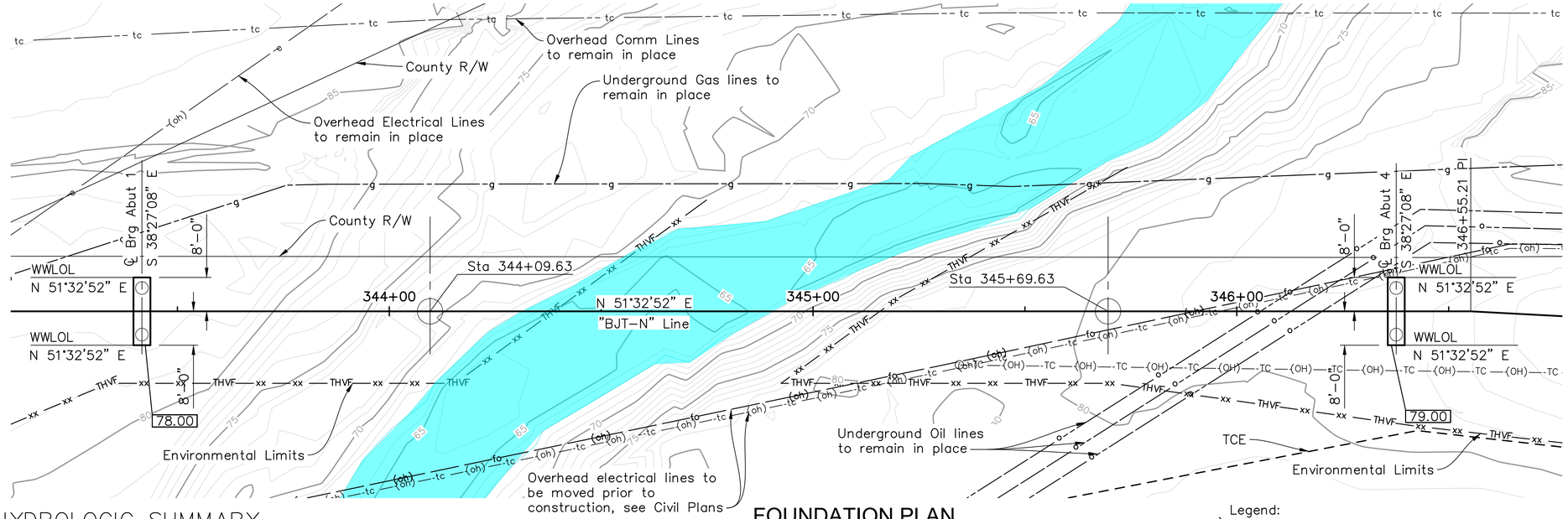

FOUNDATION PLAN

1" = 15'

HYDROLOGIC SUMMARY

Drainage area: 56.2 Square Miles

	Design (Base) Flood
Frequency (years)	100
Discharge (cubic feet per second)	12,535
Water Surface Elev at Bridge (ft)	88.8

Flood plain data based upon information available when the plans were prepared and are shown to meet Federal requirements. The accuracy of said information is not warranted by the County and interested or affected parties should make their own investigations.

SCOUR DATA TABLE

SUPPORT NO.	LONG TERM (DEGRADATION AND CONTRACTION) SCOUR ELEVATION (ft)	SHORT TERM (LOCAL) SCOUR DEPTH (ft)
Abut 1	61.00	4
Pier 2	61.00	4
Pier 3	61.00	4
Abut 4	61.00	4

PILE DATA TABLE

LOCATION	PILE TYPE	NOMINAL RESISTANCE		DESIGN TIP ELEVATION (ft)	SPECIFIED TIP ELEVATION (ft)	PILE CUT-OFF ELEVATION (ft)	PERMANENT STEEL CASING TIP ELEVATION (ft)
		COMPRESSION	TENSION				
Abut 1	36" CIDH	290	N/A	16.0 (a-I), 11.0 (a-II) 47.0 (c) 17.0 (d-I)	11.0	79.5	56.0
Pier 2	60" CIDH	710	N/A	-2.0 (a-I), 18.0 (a-II) 30.0 (c) 14.0 (d-I), -2.0 (d-II), 11.0 (d-III)	-2.0	67.0	55.0
Pier 3	60" CIDH	710	N/A	-2.0 (a-I), 18.0 (a-II) 30.0 (c) 14.0 (d-I), -2.0 (d-II), 11.0 (d-III)	-2.0	67.0	55.0
Abut 4	36" CIDH	200	N/A	15.0 (a-I), 17.0 (a-II) 50.0 (c) 29.0 (d-I)	15.0	80.5	56.0

Notes: Design Tip Elevation is controlled by the following demands:
(a-I) Compression (Strength Limit), (a-II) Compression (Extreme Event), (c) Settlement, (d-I) Lateral (Strength), (d-II) Lateral (Extreme Event), (d-III) Lateral (Service)
The specified tip elevation shall not be raised.

Note:
The Contractor shall verify all controlling field dimensions before ordering or fabricating any material.

Legend:

- X.X — Indicates bottom of footing elevation
- Indicates 36" CIDH Concrete Pile
- Indicates 60" CIDH Concrete Pile
- Indicates limits of Ordinary High Water Mark

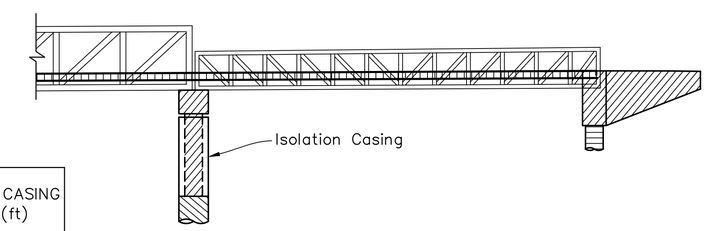

- Structural Concrete, Bridge (f'c = 4.0 ksi at 28 days)
- Structural Concrete, Bridge (Polymer Fiber) (f'c = 4.0 ksi at 28 days)
- 36" Cast-In-Drilled Hole Concrete Piling (f'c = 4.0 ksi at 28 days)
- 60" Cast-In-Drilled Hole Concrete Piling (f'c = 4.0 ksi at 28 days)

CONCRETE STRENGTH AND TYPE LIMITS

No Scale

COUNTY OF SAN LUIS OBISPO
DEPARTMENT OF PUBLIC WORKS
COUNTY GOVERNMENT CENTER, ROOM 206
SAN LUIS OBISPO, CA 93408

SCALE: AS SCALE

ORIGINAL SCALE IN INCHES FOR REDUCED PLANS
0 1 2

REVISIONS

NO.	BY	DATE	DESCRIPTION	APPROVED BY	DATE

consor
2868 PROSPECT PARK DRIVE, SUITE 250
RANCHO CORDOVA, CA 95670
P: 916.368.9181

Juan C Cruz
PROJECT ENGINEER

95% SUBMITTAL

PLANS APPROVAL DATE

REGISTERED PROFESSIONAL ENGINEER
JUAN C CRUZ
No. C88803
Exp. ----
CIVIL
STATE OF CALIFORNIA

BOB JONES TRAIL
SOUTH HIGUERA PEDESTRIAN BRIDGE

FOUNDATION PLAN

S4-3

DESIGNED BY	DRAWN BY	CHECKED BY	JOB NUMBER	SHEET	OF
J. Cruz / C. Cojocaru	P. Kenney	T. Truchement	0019-0101	98	109

PLOT DATE: 1/17/2025 1:26:02 PM BY: PATRICK.KENNEY S:\Client\Wallace Group\W12-700 Bob Jones Bike Trail\505 - CAD\0231117F-s-fp01.dwg

TYPICAL PAVEMENT STRUCTURAL SECTIONS

3 — TRAIL
0.25′ HMA (TYPE A)
0.58′ CL 2 AB

5 — Exist ROADWAY
0.50′ AC
1.83′ AB

6 — ROADWAY
0.50′ HMA (TYPE A)
1.00′ CL 2 AB

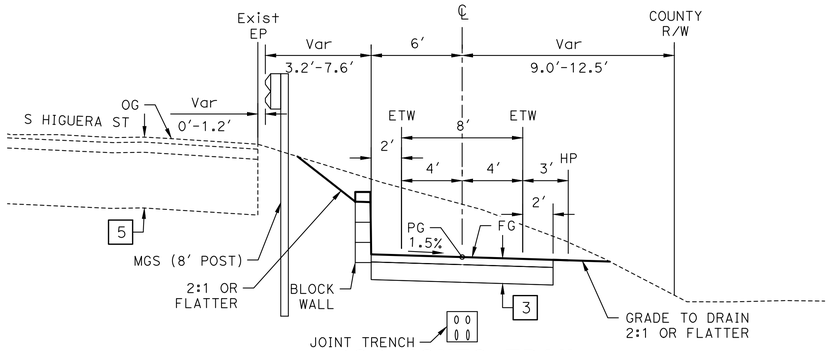

BOB JONES TRAIL
"BJT-N" Sta 353+81.47 TO 362+07.35

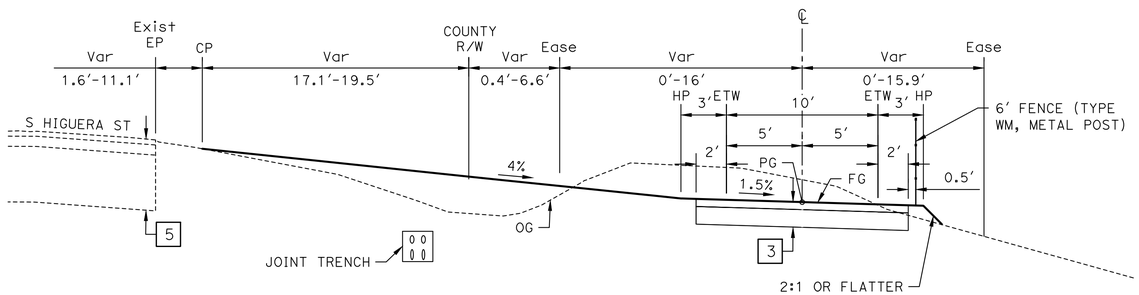

BOB JONES TRAIL
"BJT-N" Sta 346+56.03 TO 350+03.00

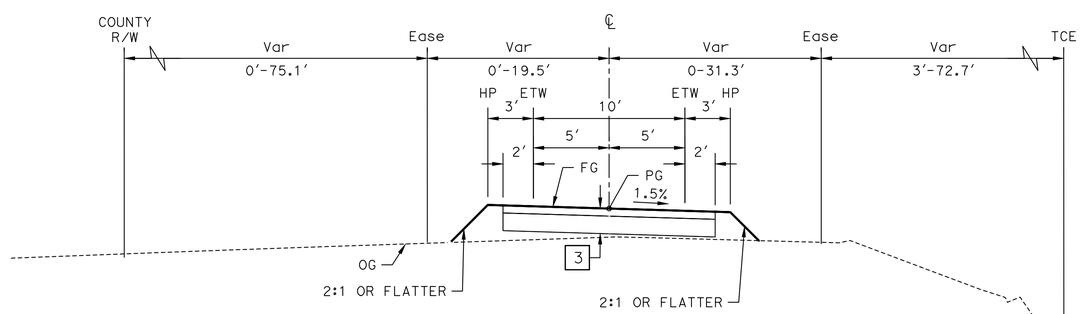

BOB JONES TRAIL
"BJT-N" Sta 332+01.94 TO 343+21.63

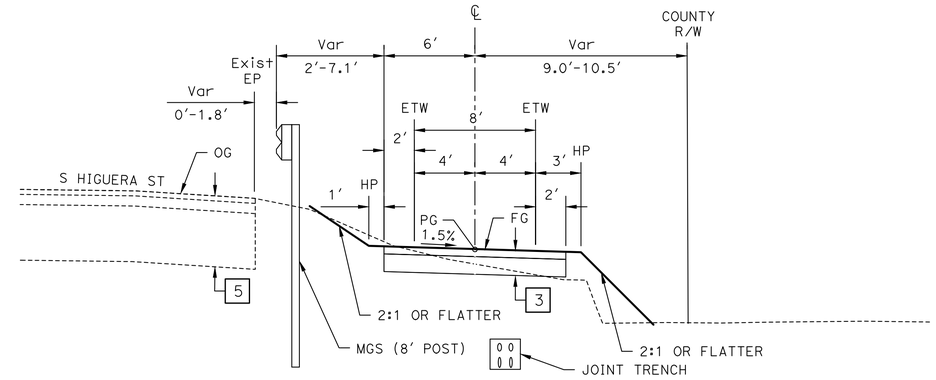

BOB JONES TRAIL
"BJT-N" Sta 370+50.00 TO 373+70.65

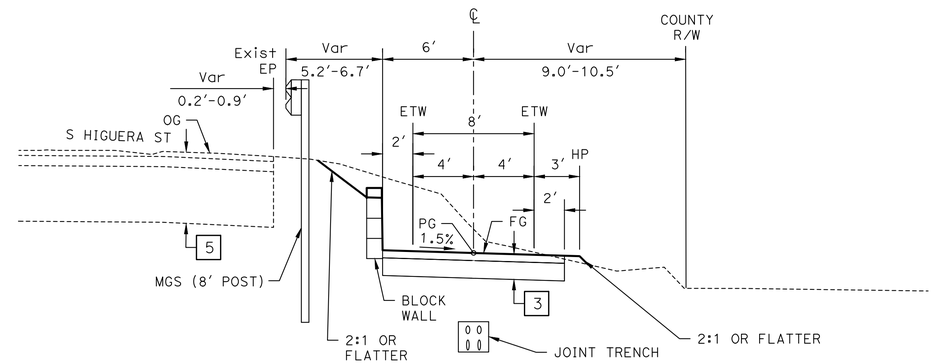

BOB JONES TRAIL
"BJT-N" Sta 365+85.01 TO 370+50.00

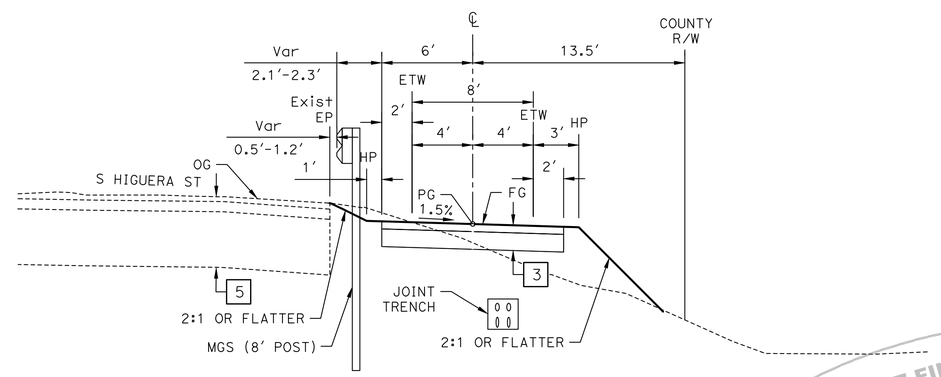

BOB JONES TRAIL
"BJT-N" Sta 363+02.96 TO 364+96.52

DRAFT FINAL SUBMITTAL

FILE NAME: 0019-0101-XSEC-01.DWG
PLOT DATE: 1/22/2025 12:10 PM BY:SARAH HUFFMAN

COUNTY OF SAN LUIS OBISPO
DEPARTMENT OF PUBLIC WORKS
COUNTY GOVERNMENT CENTER, ROOM 206
SAN LUIS OBISPO, CA 93408

SCALE: H:NO SCALE V:
ORIGINAL SCALE IN INCHES FOR REDUCED PLANS
0 1 2

REVISIONS

NO.	BY	DATE	DESCRIPTION	APPROVED BY	DATE
△					
△					
△					
△					
△					

WALLACE GROUP®
CIVIL AND TRANSPORTATION ENGINEERING
CONSTRUCTION MANAGEMENT
LANDSCAPE ARCHITECTURE
MECHANICAL ENGINEERING
PLANNING
PUBLIC WORKS ADMINISTRATION
SURVEYING / GIS SOLUTIONS
WATER RESOURCES
612 CLARION COURT
SAN LUIS OBISPO, CA 93401
T 805 544-4011 F 805 544-4294
www.wallacegroup.us

PROJECT ENGINEER
DATE SIGNED

REGISTERED PROFESSIONAL ENGINEER
SARAH M. HUFFMAN
No. 85233
FOR PLAN REVIEW ONLY
NOT FOR CONSTRUCTION
CIVIL
STATE OF CALIFORNIA

BOB JONES TRAIL

TYPICAL SECTIONS

X-3

DESIGNED BY	DRAWN BY	CHECKED BY	JOB NUMBER	SHEET	OF
SMH	ZVC	RAH	0019-0101	9	109